Classification Cancelled
Auth: CG. AMC
Date: 10 JUNE 48
By: John R. Barnett
Lieut USAF

RESTRICTED

AN 01-20EG-4

PARTS CATALOG

USAF SERIES

B-17G

AIRCRAFT

REVISION NOTICE

LATEST REVISED PAGES SUPERSEDE THE SAME PAGES OF PREVIOUS DATE

Insert revised pages into basic publication. Destroy superseded pages.

PUBLISHED UNDER AUTHORITY OF THE SECRETARY OF THE AIR FORCE
AND THE CHIEF OF THE BUREAU OF AERONAUTICS

RESTRICTED

RAFB 13 Dec 49-2805

1 SEPTEMBER 1945
REVISED 8 NOVEMBER 1949

PUBLISHED BY AVIALOGS.COM

Reproduction of the information or illustrations contained in this publication is not permitted without specific approval of the issuing service. The policy for use of Classified Publications is established for the Air Force in AFR 205-1 and for the Navy in Navy Regulations, Article 1509.

LIST OF REVISED PAGES ISSUED

INSERT LATEST REVISED PAGES. DESTROY SUPERSEDED PAGES.

NOTE: The portion of the text affected by the current revision is indicated by a vertical line in the outer margins of the page.

Page No.	Date of Latest Revision
63	10 June 1948
*106	8 November 1949
*114	8 November 1949
287	9 June 1949
293	10 June 1948
297	10 June 1948
326	9 June 1949
333	10 June 1948
336	10 June 1948
343	9 June 1949
351	9 June 1949
357	10 June 1948
359	10 June 1948
361	9 June 1949
376	10 June 1948

* The asterisk indicates pages revised, added or deleted by the current revision.

ADDITIONAL COPIES OF THIS PUBLICATION MAY BE OBTAINED AS FOLLOWS:

USAF ACTIVITIES.—In accordance with Technical Order No. 00-5-2.

NAVY ACTIVITIES.—Submit request to nearest supply point listed below, using form NavAer-140: NAS, Alameda, Calif.; ASD, Orote, Guam; NAS, Jacksonville, Fla.; NAS, Norfolk, Va.; NASD, Oahu; NASD, Philadelphia, Pa.; NAS, San Diego, Calif.; NAS, Seattle, Wash.

For listing of available mat[illegible] and details of distribution see Naval Aeronautics Publications Index NavAer 00-500.

USAF

PUBLISHED BY AVIALOGS.COM

PUBLISHED BY AVIALOGS.COM

Table of Contents (continued)

LH Supercharger Control Bracket..... 76
RH Supercharger Control Bracket..... 77
Turbo-electric Regulator—Wing 78
Wing Electrical 80
Nacelle Electrical 82
Nacelle Solenoid and Shields..... 84
Storage Battery Compartment..... 85
Wing and Nacelle Hydraulic System..... 86
Propeller Anti-icer—Wing 87
Wing De-icer System..... 88
Engine Fire Extinguisher—Wing..... 90
Vacuum System—Wing 91
Heating and De-icing System—Wing..... 92
Glycol System 94
Pressure Relief Valve Assembly and Purolator Assembly 96
Cabin Heat Control Bracket..... 97
Cabin Heat Control..... 98

Tail

Tail Surfaces 100
Tail Surfaces Details 102
Tail Surfaces Fairings and Gap Covers.....104
Tail De-icer 105
Elevator Trim Tab Control.....106
Rudder Trim Tab Control.....107

Fuselage

Nose Assembly 108
Forward Section Windows.....110
Forward Section Flooring Special Fittings....112
Pilot's Cockpit Windows and Windshield....114
Navigator's and Pilot's Station Bulkhead Fittings 116
Radio Compartment Bulkhead Fittings.....118
Forward Section Bulkhead Doors.....120
Forward Section Miscellaneous Fittings.....122
Bomb Doors and Bomb Rail Support.....123
Forward Entrance Door and Camera Door...124
Wing Stub Fillet Fairing and Compression Strut Fittings 126
Rear Section Bulkhead Fittings.....127
Top Gun Emplacement Windows.....128
Waist Gun Windows.....130
Main Entrance and Emergency Exit Doors and Releases 132
Rear Section Miscellaneous Fittings.....134
Rear Gun Mount and Tow Target Release...136
Tail Gunner's Window Enclosure.....138
Life Raft Doors and Raft Automatic Ejector..140
Seats Index 142
Pilot's and Co-pilot's Seat.....144
Windshield Wipers 146
Windshield Wiper Converter.....147
Aileron Controls—Fuselage 148
Elevator Controls—Fuselage 149
Rudder Controls—Fuselage 150
Tab Controls—Fuselage 151
Control Column 152
Rudder Pedals 154
Brake Control 156
Aileron Tab Control Assembly.....157
Tail Wheel and Surface Control Locks—Fuselage 158
Rudder and Elevator Lock Units.....159
Wing Flap Control Mechanism.....160
Automatic Flight Control Equipment.....161
Engine Controls—Fuselage 162
Engine Control Stand.....163
Control Stand Mixture Control Levers.....164

PUBLISHED BY AVIALOGS.COM

Table of Contents (continued)

Throttle Levers and Propeller Lock.....166
Elevator Trim Tab Unit.....168
Engine Control Stand Lower Pulley Rack....170
Fuselage Fuel System.....171
Auxiliary Fuel Tank Kit Assembly and Fuel Transfer Selector Valve.....172
Pilot's Instrument Tubing.....175
Instrument Equipment 176
Pilot's and Co-pilot's Instrument Board.....178
Nose Section Electrical.....180
Pilot's Compartment Electrical Equipment...182
Central Control Board and Pilot's Control Panel 185
Forward Center Fuselage Electrical Equipment 186
Aft Center Fuselage Electrical Equipment....188
Aft Fuselage Electrical Equipment.....190
Bomber's Control and Instrument Panel.....192
Auxiliary Control Board Panel.....194
Switch Panel and Formation Stick Equipment.195
Turbo-electric Regulator—Fuselage 196
Intercooler Temperature Control Stand Assembly 197
Fuselage Hydraulic System.....198
Cowl Flap System—Fuselage 200
Accumulator and Reservoir Tank.....202
Hydraulic Hand Pump 203
Hydraulic Valve Assemblies.....204
Motor Driven Gear Pump.....205
Radio Antenna 206
Radio Antenna (Special).....208
Forward Fuselage Radio Equipment.....209
Radio Equipment—Aft 210
Special Radio Equipment.....212
Radio Interphone 214
Oxygen System Control Panels.....216
Miscellaneous Oxygen Equipment.....218
Engine Fire Extinguisher and Control—Fuselage 220
Vacuum System—Fuselage 222
Vacuum Selector and Safety Valve Assemblies.224
Propeller Anti-icer—Fuselage 225
Fuselage De-icer System.....226
Forward Fuselage Heating and De-icing System 228
Heating and De-icing System—Fuselage Aft..230
Fuselage Forward Heating and Ventilating System 232
Heating and Ventilating System—Fuselage Aft 234
Cabin Heat Stand 236
Chin Turret 237
Cheek Guns and Equipment.....238
Radio Compartment Gun 240
Power Turrets 242
Waist Guns 243
Waist Guns 244
Tail Gun Equipment.....246
Tail Gun Sighting Equipment.....248
Bombardier's Stand Assembly 249
Bomb Door Control 250
Bomb Door Controls Screw Assembly.....252
Bomb Door Control Gear Assembly.....254
Bomb Door Limit Switch.....256
Bomb Control Unit Assembly.....257
Bomb Rack and Door Control.....258
Internal Bomb Hoist 260
Internal Bomb Rack—Outboard.....262
Internal Bomb Rack—Inboard.....264
Protective Armor 266
D6 Bomb Shackle Adapter.....268

RESTRICTED
PUBLISHED BY AVIALOGS.COM

Table of Contents (continued)

Alighting Gear

Universal Drag Link Assembly....269
Landing Gear and Brakes....270
Landing Gear Strut Assembly....272
Retracting Gear Mechanism Assembly....274
Landing Gear Hand Retracting Control....276
Brake Return Valve Assembly....278
Tail Gear Brake and Lock Assemblies....279
Tail Gear....280
Tail Gear Oleo Assembly....282
Tail Gear Retracting Assembly....283
Tail Gear Retracting Assembly....284

Power Plant

Cowl Anti-drag Ring....285
Engine Accessories....286
Exhaust Manifold Assemblies....288
Engine Dynafocal Mount Assembly....290
Engine Dynafocal Mount Assembly....291
Cowling Flaps....292
Cowl Flaps Operating Mechanism....294
Fixed Cowling and Shrouds....296
Engine Starter Control and Support....298
Engine Starter Control and Support....299
Outboard Engine Controls....300
Inboard Engine Controls....301
LH Outboard and Inboard Engine Fuel System....302
RH Inboard and Outboard Engine Fuel System....303
LH Outboard and RH Inboard Engine Oil System....304
LH Inboard and RH Outboard Engine Oil System....305
Cowl Flap Cylinder Assembly....306

Functional Systems

Rudder Control System....307
Elevator Control System....308
Aileron Control System....309
Tab Control System....310
Intercooler Temperature Control....311
Fuel System....312
Hydraulic System....313
Cowl Flap System....314
De-icer System....315
Heating and De-icing System....316
Heating and Ventilating System....317
Propeller Anti-icer System....318
Engine Fire Extinguisher System....319
Vacuum System....320

III NUMERICAL PARTS LIST....321
IV STANDARDS PARTS LIST....391
V SERVICE TOOLS....393

Engine and Wing Panels Hoisting Slings....394
Fuselage Hoisting Slings....395
Ground Handling Equipment....396
Service Tools....397
Service Tools....398
Service Tools....399
Service Tools....400
Service Tools....401
Operational Squadron Tool Kit Assembly....402
Service Squadron Tool Kit Assembly....403
Major Overhaul Tool Kit Assembly....404

PUBLISHED BY AVIALOGS.COM



Section one

INTRODUCTION

This Illustrated Parts Catalog has been prepared by the Boeing Aircraft Company to assist the U.S. Army Air Force maintenance personnel in identifying and ordering procurable spare parts.

The catalog has been compiled in accordance with U.S. Army and Navy Technical Order Specifications and covers U.S. Army Air Forces Model B-17G.

PUBLISHED BY AVIALOGS.COM

The catalog has been divided into five major sections. These are listed below in their respective order with a brief description of the information contained in each.

I INTRODUCTION

This section consists of instructions and reference data necessary for the complete comprehensive use of the catalog.

II GROUP ASSEMBLY PARTS LIST

This section has been divided into 5 major groups which denote the major component parts of the airplane. In addition—for purposes of reference—a group of complete functional systems has been included.

The airplane has been treated sectionally so that all parts which physically appear in each section of the airplane will be found in a like group in the Group Assembly Parts List. By reference to Figure 1 it may be determined where each group is divided. The Functional Systems group contains illustrations which show each system as it applies to the complete airplane.

Each assembly—and components thereof—has been considered for possible inclusion in the catalog and only those parts which were considered practical as replacement parts have been included.

In instances where a part has been changed during the course of the contract, both parts have been listed and identified in the usage code column as to the airplanes affected. To convert the usage code letter to the airplane serials covered, refer to the Usage Code Index in Section I.

In instances where a left hand and a right hand part are direct opposites (or nearly so), only the left hand part has been illustrated. In the parts list both left and right hand parts are broken down together with the listing of the right hand part directly following the listing of the left hand part. All components of a left or right hand installation or assembly are so designated in the nomenclature excepting those parts which are common to both.

III NUMERICAL PARTS LIST

All part numbers are listed in this section in numerical order with the index and figure number where each is shown in Section II.

IV STANDARD PARTS LIST

All standard parts numbers have been omitted here and included in Section III.

V SERVICE TOOLS

This section contains the special tools required for maintenance and repair.

PUBLISHED BY AVIALOGS.COM

HOW TO . . .

HOW TO FIND THE NUMBER OF A PART . . .

First, determine—by consulting Figure 1—the section of the airplane in which the part would be located. Next, turn to the Table of Contents and under that section, determine—by the illustration titles—the page on which the part would logically appear.

This illustration will show the part—if a procurable spare—with an index number. Refer to the parts list directly following the illustration and listed opposite the index number will be the part number, description, usage code and the quantity required of the part in question.

HOW TO FIND A PART WHEN THE NUMBER IS KNOWN . . .

Refer to the Numerical Parts List, Section III. Opposite each part number is the figure and index number denoting where the part may be found in the Group Assembly Parts List.

HOW TO FIND A MISSING PART . . .

Determine the assembly of which the part would be a component and find the illustration of that assembly in Section II by the method outlined in "How to Find the Number of a Part."

HOW TO ORDER . . .

Give the full number (not the index number) as shown in the part number column and all the information in the nomenclature column of the Group Assembly Parts List.

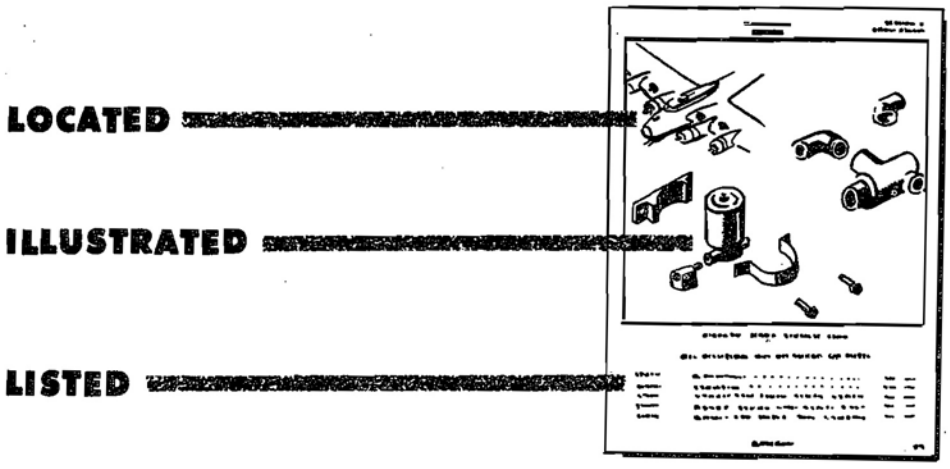

PUBLISHED BY AVIALOGS.COM

VENDORS LIST

Adel Precision Products Corp.
Burbank, California
Aeroquip Corp.
Jackson, Michigan
Aero Supply Mfg. Co., Inc.
Corry, Pennsylvania
Air Associates, Inc.
Inglewood, California
Aircraft Accessories Corp.
Burbank, California
AiResearch Mfg. Co.
Los Angeles, California
American Air Filter Co.
Louisville, Kentucky
American Bosch Corp.
Springfield, Mass.
American Gas Accumulator Co.
Elizabeth, New Jersey
American Hard Rubber Co.
New York, New York
American LaFrance-Foamite Corp.
Elmira, New York
American Phenolic Corp.
Chicago, Illinois
Apex Machine & Tool Co.
Dayton, Ohio
Ball Bros. Co.
Huntington, W. Va.
Barber-Colman Co.
Rockford, Illinois
Bendix Aviation Corp.
Detroit, Michigan
Best Universal Lock Co.
Indianapolis, Indiana
Briggs & Stratton Corp.
Milwaukee, Wisconsin
Burndy Engineering Co., The
New York, New York
Cannon Electric Development Co.
Los Angeles, California
Chrysler Corp., Amplex Division
Detroit, Michigan
Covert Mfg. Co.
Troy, New York
Cramer-Posture Chair Co.
Kansas City, Missouri
Cutler Hammer Inc.
Milwaukee, Wisconsin
Dayton Mfg. Co.
Dayton, Ohio
Delco Products Corp.
Flint, Michigan
Denison Engineering Co.
Columbus, Ohio
Drake Mfg. Co.
Chicago, Illinois
Eberhard Mfg. Co.
Cleveland, Ohio
Eclipse Aviation
Bendix, New Jersey
Edgewater Steel Co.
Pittsburgh, Pennsylvania
Edwards Co.
New York, New York
Elastic Stop Nut Corp.
Union, New Jersey
Electrimatic
Chicago, Illinois
Fafnir Bearing Co., The
New Britain, Connecticut
Federal Bearings Co., Inc., The
Poughkeepsie, New York
Garlock Packing Co.
Palmyra, New York
General Electric Co.
Schenectady, New York
Goodrich Co., The B. F.
Akron, Ohio
Goodyear Tire & Rubber Co., Inc.
Akron, Ohio
Graton and Knight Co.
Worcester, Massachusetts
Guardian Electric Mfg. Co.
Chicago, Illinois
Hamilton Standard Propellers
East Hartford, Connecticut
Harvill Die Casting
Los Angeles, California
Hayes Industries, Inc.
Jackson, Michigan
Hubbel, Inc., Harvey
Bridgeport, Connecticut
Jack & Heintz, Inc.
Bedford, Ohio
Kenyon Instrument Co., Inc.
Huntington Station, N. Y.
Kidde & Co., Inc., Walter
Bloomfield, New Jersey
Kingwell Bros.
San Francisco, California
Koehler Aircraft Products Co.
Dayton, Ohio
Kollsman Instrument Co.
Elmhurst, New York
Korry Mfg. Co.
Seattle, Washington
Leach Relay Co.
Los Angeles, California
Lewis Engineering Co., The
Naugatuck, Connecticut
Liquidometer Corp., The
Long Island City, New York
Lord Mfg. Co.
Erie, Pennsylvania
Lovell Mfg. Co.
Erie, Pennsylvania
Mallory Co., Inc., P. R.
Indianapolis, Indiana
Manning, Maxwell & Moore
Bridgeport, Connecticut
Marquette Metal Products
Cleveland, Ohio
McQuay Aircraft Corp.
Los Angeles, California
Micro Switch Corp.
Freeport, Illinois
Mines Equipment Co.
St. Louis, Missouri
Minneapolis-Honeywell Regulator Co.
Minneapolis, Minnesota
North & Judd Mfg. Co.
New Britain, Connecticut
Ohmite Mfg. Co.
Chicago, Illinois
Parker Appliance Co., The
Cleveland, Ohio
Peerless of America, Inc.
Chicago, Illinois
Pesco Pump Engineering Service Corp.
Cleveland, Ohio
Pioneer Instruments Division, Bendix
Bendix, New Jersey
Purolator Products Inc.
Newark, New Jersey
Rite Hardware Co.
Glendale, California
Rochester Mfg. Co., The
Rochester, New York
Romec Pump Co.
Elyria, Ohio
Schrader's Son, A.
Brooklyn, New York
Seattle Hardware Co.
Seattle, Washington
Shakespeare Products Co.
Kalamazoo, Michigan
Simmonds-AEROcessories
New York, New York
SKF Industries
Philadelphia, Pennsylvania
Smith Corp., A. O.
Milwaukee, Wisconsin
Smoot-Holman
Inglewood, California
Spencer Thermostat
Attleboro, Massachusetts
Sperry Gyroscope Co.
Brooklyn, New York
Square D Co.
Detroit, Michigan
Starbird Co., Geo. A.
Los Angeles, California
Sturges Mfg. Co.
Glendale, California
Thompson Products Inc.
Cleveland, Ohio
Thordarson Electric Mfg. Co.
Chicago, Illinois
Timken Roller Bearing Co.
Canton, Ohio
Tinnerman Products, Inc.
Cleveland, Ohio
Torrington Co., The Bearings Division
Torrington, Connecticut
United Aircraft Products, Inc.
Dayton, Ohio
United-Carr Fastener Corp.
Cambridge, Massachusetts
Waterbury Buckle Co.
Waterbury, Connecticut
Weston Electrical Instrument Co.
Newark, New Jersey
White Dental Mfg. Co., S. S.
Philadelphia, Pennsylvania
Wright Aeronautical Corp.
Paterson, New Jersey

PUBLISHED BY AVIALOGS.COM

USAGE CODE INDEX

A	AF42-31032 thru AF42-31116
B	AF42-31032 thru AF42-31131
C	AF42-31032 thru AF42-31137
D	AF42-31032 thru AF42-31155
E	AF42-31032 thru AF42-31231
F	AF42-31032 thru AF42-31251
G	AF42-31032 thru AF42-31271
H	AF42-31032 thru AF42-31274
I	AF42-31032 thru AF42-31281
J	AF42-31032 thru AF42-31331
K	AF42-31032 thru AF42-31377
L	AF42-31032 thru AF42-31378
M	AF42-31032 thru AF42-31381
N	AF42-31032 thru AF42-31431
O	AF42-31032 thru AF42-31435
P	AF42-31032 thru AF42-31441
Q	AF42-31032 thru AF42-31481
R	AF42-31032 thru AF42-31498
S	AF42-31032 thru AF42-31511
T	AF42-31032 thru AF42-31531
U	AF42-31032 thru AF42-31554
V	AF42-31032 thru AF42-31581
W	AF42-31032 thru AF42-31676
X	AF42-31032 thru AF42-31681
Y	AF42-31032 thru AF42-31731
Z	AF42-31032 thru AF42-31845
AA	AF42-31032 thru AF42-31852
BA	AF42-31032 thru AF42-31931
CA	AF42-31032 thru AF42-31961
DA	AF42-31032 thru AF42-32066
EA	AF42-31032 thru AF42-32116
FA	AF42-31032 thru AF42-97060
GA	AF42-31032 thru AF42-97072
HA	AF42-31032 thru AF42-97172
IA	AF42-31032 thru AF42-97182
JA	AF42-31032 thru AF42-97272
KA	AF42-31032 thru AF42-97280
LA	AF42-31032 thru AF42-97370
MA	AF42-31032 thru AF42-97372
NA	AF42-31032 thru AF42-97401
OA	AF42-31032 thru AF42-97407
PA	AF42-31032 thru AF42-102378
QA	AF42-31032 thru AF42-102413
RA	AF42-31032 thru AF42-102443
SA	AF42-31032 thru AF42-102478
TA	AF42-31032 thru AF42-102543
UA	AF42-31032 thru AF42-102597
VA	AF42-31032 thru AF42-102643
WA	AF42-31032 thru AF42-102708
XA	AF42-31032 thru AF42-102743
YA	AF42-31032 thru AF42-102852
ZA	AF42-31032 thru AF42-102926
AB	AF42-31032 thru AF42-102943
BB	AF42-31032 thru AF42-102973
CB	AF42-31032 thru AF42-102978
DB	AF42-31032 thru AF43-37590
EB	AF42-31032 thru AF43-37665
FB	AF42-31032 thru AF43-37671
GB	AF42-31032 thru AF43-37673
HB	AF42-31032 thru AF43-37723
IB	AF42-31032 thru AF43-37727
JB	AF42-31032 thru AF43-37773
KB	AF42-31032 thru AF43-37873
LB	AF42-31032 thru AF43-37947
MB	AF42-31032 thru AF43-37949
NB	AF42-31032 thru AF43-37973
OB	AF42-31032 thru AF43-38008
PB	AF42-31032 thru AF43-38062
QB	AF42-31032 thru AF43-38073
RB	AF42-31032 thru AF43-38150
SB	AF42-31032 thru AF43-38169
TB	AF42-31032 thru AF43-38173
UB	AF42-31032 thru AF43-38252
VB	AF42-31032 thru AF43-38265
WB	AF42-31032 thru AF43-38273
XB	AF42-31032 thru AF43-38362
YB	AF42-31032 thru AF43-38382
ZB	AF42-31032 thru AF43-38473
AC	AF42-31032 thru AF43-38513
BC	AF42-31032 thru AF43-38573
CC	AF42-31032 thru AF43-38580
DC	AF42-31032 thru AF43-38589
EC	AF42-31032 thru AF43-38592
FC	AF42-31032 thru AF43-38608
GC	AF42-31032 thru AF43-38632
HC	AF42-31032 thru AF43-38652
IC	AF42-31032 thru AF43-38673
JC	AF42-31032 thru AF43-38698
KC	AF42-31032 thru AF43-38832
LC	AF42-31032 thru AF43-38973
MC	AF42-31032 thru AF43-39003
NC	AF42-31032 thru AF43-39008
OC	AF42-31032 thru AF43-39037
PC	AF42-31032 thru AF43-39042
QC	AF42-31032 thru AF43-39048
RC	AF42-31032 thru AF43-39053
SC	AF42-31032 thru AF43-39073
TC	AF42-31032 thru AF43-39082
UC	AF42-31032 thru AF43-39099
VC	AF42-31032 thru AF43-39108
WC	AF42-31032 thru AF43-39116
XC	AF42-31032 thru AF43-39122
YC	AF42-31032 thru AF43-39132
ZC	AF42-31032 thru AF43-39153
AD	AF42-31032 thru AF43-39163
BD	AF42-31032 thru AF43-39197
CD	AF42-31032 thru AF43-39202
DD	AF42-31032 thru AF43-39205
ED	AF42-31032 thru AF43-39208
FD	AF42-31032 thru AF43-39248
GD	AF42-31032 thru AF43-39263
HD	AF42-31032 thru AF43-39273
ID	AF42-31032 thru AF43-39373
JD	AF42-31032 thru AF43-39480
KD	AF42-31032 and subsequent
LD	AF42-31032 thru AF42-31076 and AF42-31277 thru AF42-31431
MD	AF42-31032 thru AF42-31209 and AF42-31310 and subsequent
ND	AF42-31032 thru AF42-31251 and AF43-37974 and subsequent
OD	AF42-31032 thru AF42-31271 and AF43-37509 thru AF43-37908
PD	AF42-31032 thru AF42-31313 and AF42-97328 and subsequent
QD	AF42-31032 thru AF42-31331 and AF43-39117 and subsequent
RD	AF42-31032 thru AF42-31951 and AF42-97058 and subsequent
SD	AF42-31032 thru AF42-97131 and AF42-97273 thru AF42-102587
TD	AF42-31032 thru AF42-97407 and AF43-38252 and subsequent
UD	AF42-31032 thru AF42-102643 and AF43-38674 and subsequent
VD	AF42-31032 thru AF43-38837 and AF43-39087 thru AF43-39158
WD	AF42-31132 thru AF42-97407
XD	AF42-31132 thru AF42-102943
YD	AF42-31132 thru AF43-38062
ZD	AF42-31132 thru AF43-39073
AE	AF42-31132 thru AF43-39082
BE	AF42-31132 and subsequent
CE	AF42-31138 thru AF42-31554
DE	AF42-31156 thru AF43-38973
EE	AF42-31156 thru AF42-102413
FE	AF42-31156 thru AF42-102926
GE	AF42-31210 thru AF42-31309
HE	AF42-31032 thru AF42-31531 and AF43-37509 and subsequent
IE	AF42-31232 thru AF42-31301
JE	AF42-31232 thru AF42-31335
KE	AF42-31232 thru AF42-31498
LE	AF42-31232 thru AF42-31731
ME	AF42-31232 thru AF42-31931
NE	AF42-31232 thru AF42-32116
OE	AF42-31232 thru AF42-102643
PE	AF42-31232 thru AF42-102926
QE	AF42-31232 thru AF42-102978

PUBLISHED BY AVIALOGS.COM

Usage Code Index (continued)

RE	AF42-31232 thru AF43-37973
SE	AF42-31232 thru AF43-38073
TE	AF42-31232 thru AF43-38173
UE	AF42-31232 thru AF43-38252
VE	AF42-31232 thru AF43-38348
WE	AF42-31232 thru AF43-38592
XE	AF42-31232 thru AF43-38673
YE	AF42-31232 thru AF43-39373
ZE	AF42-31232 and subsequent
AF	AF42-31232 thru AF42-97407 and AF43-38174 and subsequent
BF	AF42-31232 thru AF43-38273 and AF43-38429 and subsequent
CF	AF42-31272 thru AF42-102978
DF	AF42-31272 and subsequent
EF	AF42-31272 thru AF42-102978 and AF43-37909 and subsequent
FF	AF42-31275 and Subsequent
GF	AF42-31302 thru AF43-38348
HF	AF42-31314 thru AF42-97327
IF	AF42-31332 thru AF42-32116
JF	AF42-31332 thru AF42-97172
KF	AF42-31332 thru AF42-97407
LF	AF42-31332 thru AF43-38073
MF	AF42-31332 thru AF43-38508
NF	AF42-31332 thru AF43-39116
OF	AF42-31332 and subsequent
PF	AF42-31336 thru AF43-38348
QF	AF42-31336 and subsequent
RF	AF42-31378 and subsequent
SF	AF42-31382 thru AF42-97172
TF	AF42-31432 thru AF42-97172
UF	AF42-31432 thru AF42-97407
VF	AF42-31432 thru AF43-38573
WF	AF42-31432 and subsequent
XF	AF42-31442 thru AF43-39073
YF	AF42-31482 and subsequent
ZF	AF42-31499 thru AF42-102543
AG	AF42-31499 thru AF42-102643
BG	AF42-31499 thru AF43-38473
CG	AF42-31499 and subsequent
DG	AF42-31512 and subsequent
EG	AF42-31531 and subsequent
FG	AF42-31532 thru AF42-31731
GG	AF42-31532 thru AF42-97407
HG	AF42-31532 thru AF42-102978
IG	AF42-31532 thru AF43-37727
JG	AF42-31532 thru AF43-37928
KG	AF42-31532 thru AF43-38073
LG	AF42-31532 thru AF43-38592
MG	AF42-31532 thru AF43-39108
NG	AF42-31532 and subsequent
OG	AF42-31555 and subsequent
PG	AF42-31582 and subsequent
QG	AF42-31677 and subsequent
RG	AF42-31682 thru AF42-97401
SG	AF42-31682 and subsequent
TG	AF42-31732 thru AF42-102978
UG	AF42-31732 thru AF43-38073
VG	AF42-31732 thru AF43-39208
WG	AF42-31732 and subsequent
XG	AF42-31846 thru AF43-38673
YG	AF42-31846 and subsequent
ZG	AF42-31932 thru AF42-31942
AH	AF42-31932 thru AF42-102978
BH	AF42-31932 thru AF43-38748
CH	AF42-31932 thru AF43-38992
DH	AF42-31932 thru AF43-39108
EH	AF42-31932 and subsequent
FH	AF42-31943 thru AF42-102543
GH	AF42-31952 thru AF42-32116
HH	AF42-31962 and subsequent
IH	AF42-32067 and subsequent
JH	AF42-97058 thru AF42-97172
KH	AF42-97058 thru AF42-102543
LH	AF42-97058 thru AF42-102643
MH	AF42-97058 thru AF42-102978
NH	AF42-97058 thru AF43-38062
OH	AF42-97058 thru AF43-38073
PH	AF42-97058 thru AF43-38252
QH	AF42-97058 and subsequent
RH	AF42-97061 and subsequent
SH	AF42-97173 thru AF42-97296
TH	AF42-97173 thru AF42-97372
UH	AF42-97173 thru AF42-102743
VH	AF42-97173 thru AF42-102978
WH	AF42-97173 thru AF43-37803
XH	AF42-97173 thru AF43-38073
YH	AF42-97173 thru AF43-38125
ZH	AF42-97173 thru AF43-38173
AI	AF42-97173 thru AF43-38273
BI	AF42-97173 thru AF43-38673
CI	AF42-97173 thru AF43-38792
DI	AF42-97173 thru AF43-38832
EI	AF42-97173 thru AF43-38953
FI	AF42-97173 thru AF43-39116
GI	AF42-97173 thru AF43-39163
HI	AF42-97173 thru AF43-39223
II	AF42-97173 thru AF43-39363
JI	AF42-97173 and subsequent
KI	AF42-97262 thru AF43-38073
LI	AF42-97262 and subsequent
MI	AF42-97273 and subsequent
NI	AF42-97281 and subsequent
OI	AF42-97297 thru AF42-97407
PI	AF42-97371 and subsequent
QI	AF42-97373 thru AF42-102413
RI	AF42-97373 and subsequent
SI	AF42-97402 and subsequent
TI	AF42-102379 thru AF42-102943
UI	AF42-102379 thru AF42-102978
VI	AF42-102379 thru AF43-37673
WI	AF42-102379 thru AF43-38062
XI	AF42-102379 thru AF43-38073
YI	AF42-102379 thru AF43-38173
ZI	AF42-102379 thru AF43-38251
AJ	AF42-102379 thru AF43-38273
BJ	AF42-102379 thru AF43-38362
CJ	AF42-102379 thru AF43-38363
DJ	AF42-102379 thru AF43-38473
EJ	AF42-102379 thru AF43-38973
FJ	AF42-102379 thru AF43-39027
GJ	AF42-102379 thru AF43-39037
HJ	AF42-102379 thru AF43-39058
IJ	AF42-102379 thru AF43-39208
JJ	AF42-102379 thru AF43-39273
KJ	AF42-102379 and subsequent
LJ	AF42-102379 thru AF43-38273 and AF43-38429 and subsequent
MJ	AF42-102414 thru AF43-38073
NJ	AF42-102414 thru AF43-38973
OJ	AF42-102414 thru AF43-39123
PJ	AF42-102414 and subsequent
QJ	AF42-102444 thru AF42-102643
RJ	AF42-102444 thru AF43-38973
SJ	AF42-102444 and subsequent
TJ	AF42-102479 thru AF42-102978
UJ	AF42-102479 thru AF43-37773
VJ	AF42-102479 and subsequent
WJ	AF42-102544 thru AF42-102743
XJ	AF42-102544 thru AF42-102973
YJ	AF42-102544 thru AF43-37973
ZJ	AF42-102544 thru AF43-38073
AK	AF42-102544 thru AF43-38173
BK	AF42-102544 thru AF43-39082
CK	AF42-102544 thru AF43-39163
DK	AF42-102544 and subsequent
EK	AF42-102598 and subsequent
FK	AF42-102643 and subsequent
GK	AF42-102644 thru AF43-38473
HK	AF42-102644 thru AF43-38632
IK	AF42-102644 thru AF43-38673
JK	AF42-102644 and subsequent
KK	AF42-102709 and subsequent
LK	AF42-102739 and subsequent
MK	AF42-102744 thru AF43-37665
NK	AF42-102744 thru AF43-38273
OK	AF42-102744 thru AF43-38632
PK	AF42-102744 and subsequent
QK	AF42-102844 thru AF43-39027
RK	AF42-102844 and subsequent
SK	AF42-102853 and subsequent
TK	AF42-102927 thru AF43-38973
UK	AF42-102927 thru AF43-39073
VK	AF42-102927 and subsequent
WK	AF42-102944 thru AF43-37973
XK	AF42-102944 thru AF43-38173
YK	AF42-102944 thru AF43-38362

PUBLISHED BY AVIALOGS.COM

Usage Code Index (continued)

ZK	AF42-102944 thru AF43-39027
AL	AF42-102944 and subsequent
BL	AF42-102974 and subsequent
CL	AF42-102979 and subsequent
DL	AF43-37509 thru AF43-37927
EL	AF43-37509 thru AF43-38073
FL	AF43-37509 thru AF43-38252
GL	AF43-37509 thru AF43-38592
HL	AF43-37509 thru AF43-39208
IL	AF43-37509 and subsequent
JL	AF43-37509 thru AF43-37523 and AF43-38510 and subsequent
KL	AF43-37591 and subsequent
LL	AF43-37666 and subsequent
ML	AF43-37672 thru AF43-39108
NL	AF43-37672 and subsequent
OL	AF43-37674 thru AF43-38073
PL	AF43-37674 and subsequent
QL	AF43-37724 and subsequent
RL	AF43-37728 thru AF43-37927
SL	AF43-37728 thru AF43-39099
TL	AF43-37728 and subsequent
UL	AF43-37774 thru AF43-38073
VL	AF43-37774 thru AF43-38362
WL	AF43-37774 thru AF43-39082
XL	AF43-37774 and subsequent
YL	AF43-37804 and subsequent
ZL	AF43-37874 thru AF43-38473
AM	AF43-37928 thru AF43-38947
BM	AF43-37928 thru AF43-38973
CM	AF43-37928 and subsequent
DM	AF43-37929 and subsequent
EM	AF43-37948 and subsequent
FM	AF43-37950 and subsequent
GM	AF43-37974 thru AF43-39037
HM	AF43-37974 and subsequent
IM	AF43-38009 thru AF43-37674
JM	AF43-38058 and subsequent
KM	AF43-38063 and subsequent
LM	AF43-38074 only
MM	AF43-38074 thru AF43-38173
NM	AF43-38074 thru AF43-38269
OM	AF43-38074 thru AF43-38295
PM	AF43-38074 thru AF43-38448
QM	AF43-38074 thru AF43-38473
RM	AF43-38074 thru AF43-38508
SM	AF43-38074 thru AF43-38573
TM	AF43-38074 thru AF43-38858
UM	AF43-38074 thru AF43-38873
VM	AF43-38074 thru AF43-39116
WM	AF43-38074 thru AF43-39208
XM	AF43-38074 and subsequent
YM	AF43-38151 and subsequent
ZM	AF43-38170 and subsequent
AN	AF43-38174 thru AF43-38362
BN	AF43-38174 thru AF43-38573
CN	AF43-38174 thru AF43-38698
DN	AF43-38174 thru AF43-39082
EN	AF43-38174 and subsequent
FN	AF43-38252 thru AF43-39273
GN	AF43-38252 and subsequent
HN	AF43-38253 thru AF43-39073
IN	AF43-38253 thru AF43-39373
JN	AF43-38253 and subsequent
KN	AF43-38266 and subsequent
LN	AF4-38270 and subsequent
MN	AF43-38274 thru AF43-38428
NN	AF43-38274 thru AF43-38973
ON	AF43-38274 thru AF43-39027
PN	AF43-38274 thru AF43-39205
QN	AF43-38274 and subsequent
RN	AF43-38296 and subsequent
SN	AF43-38349 and subsequent
TN	AF43-38353 and subsequent
UN	AF43-38362 thru AF43-39082
VN	AF43-38363 thru AF43-38973
WN	AF43-38363 thru AF43-39273
XN	AF43-38363 and subsequent
YN	AF43-38364 thru AF43-39273
ZN	AF43-38383 and subsequent
AO	AF43-38429 thru AF43-39205
BO	AF43-38449 thru AF43-38473
CO	AF43-38449 and subsequent
DO	AF43-38474 thru AF43-38793
EO	AF43-38474 thru AF43-39208
FO	AF43-38474 thru AF43-39343
GO	AF43-38474 thru AF43-39363
HO	AF43-38474 and subsequent
IO	AF43-38508 and subsequent
JO	AF43-38509 thru AF43-39214
KO	AF43-38509 and subsequent
LO	AF43-38514 and subsequent
MO	AF43-38574 thru AF43-38673
NO	AF43-38574 and subsequent
OO	AF43-38590 and subsequent
PO	AF43-38593 and subsequent
QO	AF43-38609 and subsequent
RO	AF43-38633 and subsequent
SO	AF43-38653 and subsequent
TO	AF43-38674 thru AF43-38832
UO	AF43-38674 thru AF43-38973
VO	AF43-38674 thru AF43-39373
WO	AF43-38674 and subsequent
XO	AF43-38699 and subsequent
YO	AF43-38749 and subsequent
ZO	AF43-38793 and subsequent
AP	AF43-38794 and subsequent
BP	AF43-38824 and subsequent
CP	AF43-38833 thru AF43-39208
DP	AF43-38833 and subsequent
EP	AF43-38838 thru AF43-39086 and AF43-39159 and subsequent
FP	AF43-38859 and subsequent
GP	AF43-38874 and subsequent
HP	AF43-38948 thru AF43-39099
IP	AF43-38948 and subsequent
JP	AF43-38954 and subsequent
KP	AF43-38974 thru AF43-39073
LP	AF43-38974 thru AF43-39212
MP	AF43-38974 and subsequent
NP	AF43-38993 and subsequent
OP	AF43-39004 and subsequent
PP	AF43-39009 and subsequent
QP	AF43-39028 thru AF43-39273
RP	AF43-39038 and subsequent
SP	AF43-39043 and subsequent
TP	AF43-39054 and subsequent
UP	AF43-39059 and subsequent
VP	AF43-39074 and subsequent
WP	AF43-39083 and subsequent
XP	AF43-39094 and subsequent
YP	AF43-39100 and subsequent
ZP	AF43-39109 thru AF43-39116
AQ	AF43-39109 and subsequent
BQ	AF43-39117 thru AF43-39208
CQ	AF43-39117 and subsequent
DQ	AF43-39123 and subsequent
EQ	AF43-39124 and subsequent
FQ	AF43-39133 and subsequent
GQ	AF43-39143 and subsequent
HQ	AF43-39154 and subsequent
IQ	AF43-39158 and subsequent
JQ	AF43-39164 and subsequent
KQ	AF43-39198 and subsequent
LQ	AF43-39203 and subsequent
MQ	AF43-39206 and subsequent
NQ	AF43-39209 thru AF43-39363
OQ	AF43-39209 thru AF43-39384
PQ	AF43-39209 and subsequent
QQ	AF43-39213 and subsequent
RQ	AF43-39215 and subsequent
SQ	AF43-39224 and subsequent
TQ	AF43-39234 and subsequent
UQ	AF43-39249 and subsequent
VQ	AF43-39264 and subsequent
WQ	AF43-39274 and subsequent
XQ	AF43-39344 and subsequent
YQ	AF43-39364 and subsequent
ZQ	AF43-39374 and subsequent
AR	AF43-39383 and subsequent
BR	AF43-39385 and subsequent
CR	AF43-39439 and subsequent
DR	AF43-39481 and subsequent

PUBLISHED BY AVIALOGS.COM

PUBLISHED BY AVIALOGS.COM



Section two

GROUP ASSEMBLY PARTS LIST

PUBLISHED BY AVIALOGS.COM

WING

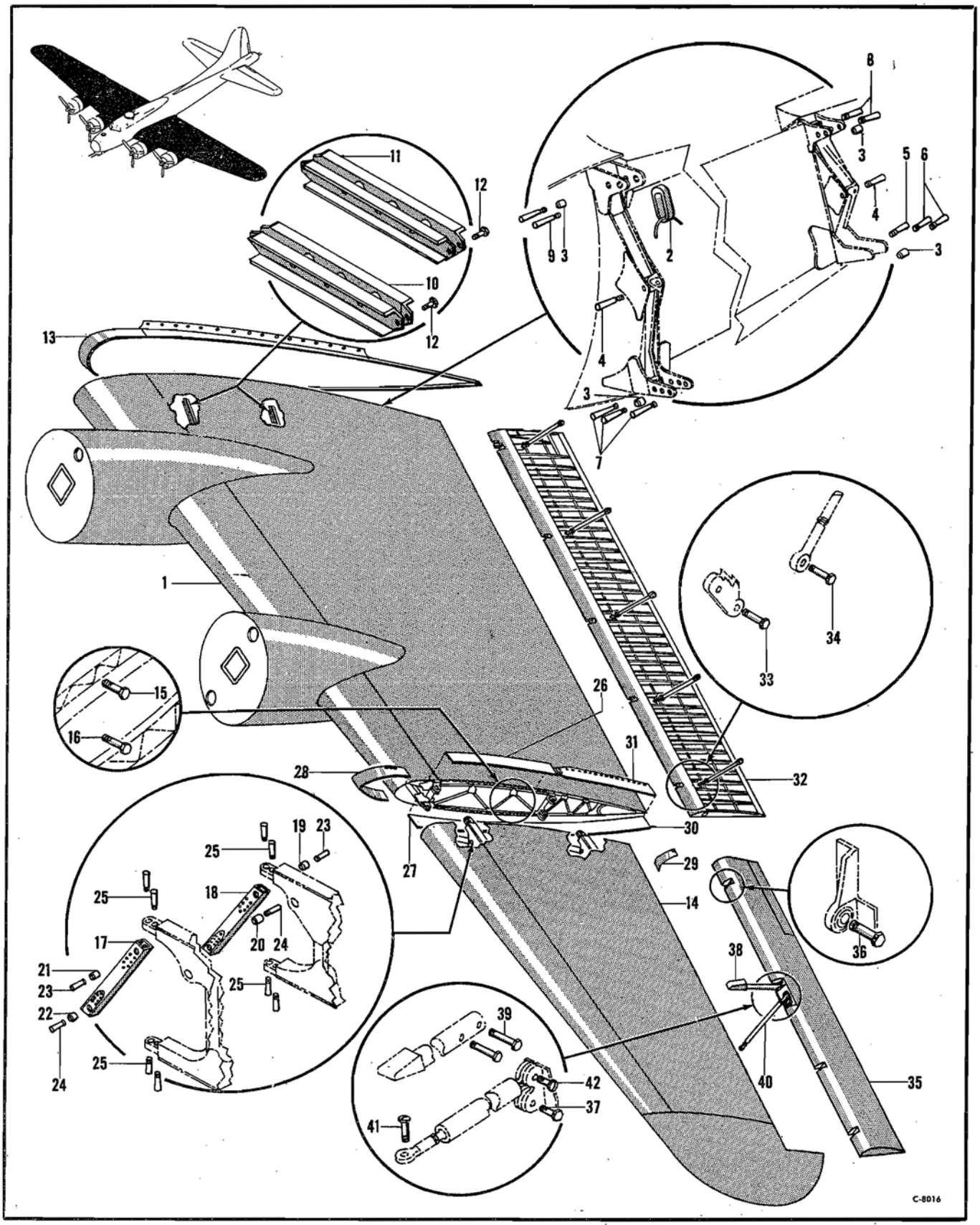

Figure 2—Wing Index

PUBLISHED BY AVIALOGS.COM

WING

Wing Index

Figure & Index No.	Part Number	1 2 3 4 5 6 7 Nomenclature	Usage Code	Units Per Assy.
		Wing Index		
2-1	15-7975-81	Wing Assembly—Inner LH (see fig. 9)	QB	1
	15-7975-82	Wing Assembly—Inner RH (see fig. 9)	QB	1
	15-7975-122	Wing Assembly—Inner LH (see fig. 9)	XM	1
	15-7975-123	Wing Assembly—Inner RH (see fig. 9)	XM	1
	64-1080	Installation—Inner connection LH	All	NP
	64-1080-1	Installation—Inner connection RH	All	NP
2	41-9507	Link—Hoisting	All	1
3	51-176	Spacer—Wing connection	All	4
4	AN386-8-25	Pin—Threaded taper	All	2
5	AN386-8-31	Pin—Threaded taper	All	1
6	AN386-9-31	Pin—Threaded taper	All	2
7	AN386-9-32	Pin—Threaded taper	All	3
8	AN386-10-29	Pin—Threaded taper	All	2
9	AN386-10A-30	Pin—Threaded taper	All	2
10	41-5881	Brace Assembly—Front	All	2
11	41-5881-1	Brace Assembly—Rear	All	2
12	AN4-10A	Bolt—Aircraft	All	8
	AN365-428	Nut—Self-locking	All	8
	AN960-416	Washer—Plain	All	8
13	64-1031	Installation—Wing gap cover LH (see fig. 4)	All	NP
	64-1031-1	Installation—Wing gap cover RH (see fig. 4)	All	NP
14	85-4772-700	Wing Assembly—Outer LH (see fig. 3, 5 and 6)	All	1
	85-4772-701	Wing Assembly—Outer RH (see fig. 3, 5 and 6)	All	1
15	AN5-11A	Bolt—Aircraft	All	48
16	AN6-12A	Bolt—Aircraft	All	48
	55-4764	Installation—Outer connection LH	All	NP
	55-4764-1	Installation—Outer connection RH	All	NP
17	3-8760	Strut Assembly—Front spar	All	1
18	3-8761	Strut Assembly—Rear spar	All	1
19	51-176-1	Spacer	All	1
20	51-176-2	Spacer	All	1
21	51-176-3	Spacer	All	1
22	51-176-4	Spacer	All	1
23	AN386-5-24A	Pin—Threaded taper	All	2
24	AN386-5-27A	Pin—Threaded taper	All	2
25	AN386-6-14A	Pin—Threaded taper	All	8
26	84-1580-700	Cover—Upper LH	All	1
	84-1580-701	Cover—Upper RH	All	1
27	84-1580-16	Cover—Lower LH	All	1
	84-1580-17	Cover—Lower RH	All	1
28	84-1580-702	Cover—Gap nose LH	All	1
	84-1580-703	Cover—Gap nose RH	All	1
29	84-1580-8	Cover—Gap rear LH	All	1
	84-1580-9	Cover—Gap rear RH	All	1
30	84-1580-10	Cover—Gap lower LH	All	1
	84-1580-11	Cover—Gap lower RH	All	1
31	84-1580-14	Cover—Gap upper LH	All	1
	84-1580-15	Cover—Gap upper RH	All	1
32	75-5127-617	Flap Assembly—LH (see fig. 8)	All	1
	75-5127-618	Flap Assembly—RH (see fig. 8)	All	1
33	AN4-24	Bolt—Aircraft	All	10
34	AN5-15	Bolt—Aircraft	All	10
35	58-784	Aileron Assembly—LH (see fig. 7)	All	1
	58-784-1	Aileron Assembly—RH (see fig. 7)	All	1
36	AN4-12	Bolt—Aircraft	All	6
37	AN4-16	Bolt—Aircraft	All	2
	AN310-4	Nut—Aircraft castle	All	8
	AN960-416	Washer—Plain	All	18
38	6-8992-6	Weight Assembly—LH	All	1
	6-8992-7	Weight Assembly—RH	All	1
39	NAS54A21S	Bolt—Close tolerance	All	4
	AN365-428	Nut—Self-locking	All	4
	AN960-416	Washer—Plain	All	4
40	3-12098-3	Rod Assembly	All	2
41	AN25-23	Bolt—Clevis	All	2
42	AN25-25	Bolt—Clevis	All	2
	AN320-5	Nut—Aircraft shear	All	4

PUBLISHED BY AVIALOGS.COM

WING

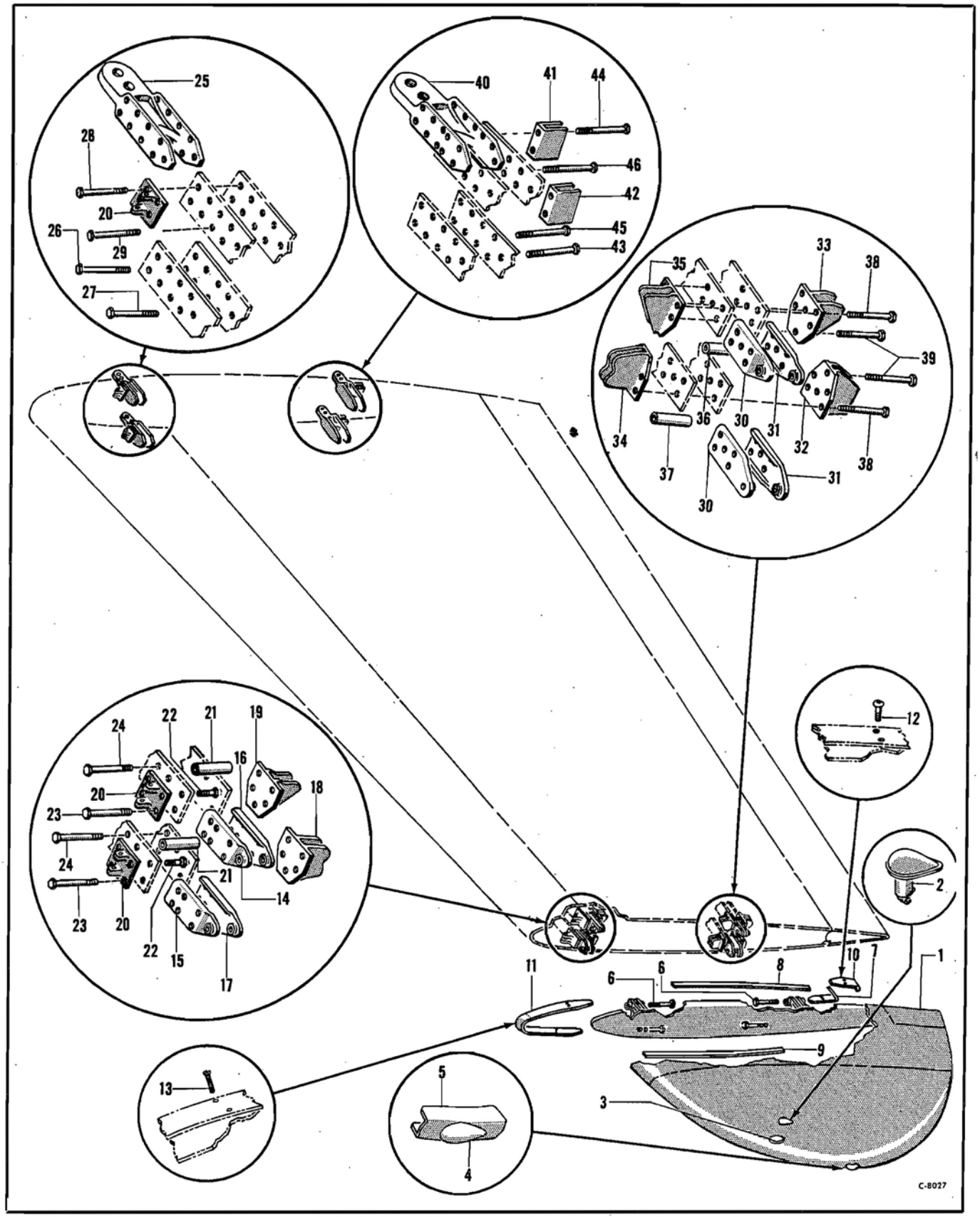

Figure 3—Outer Wing Panel Details

PUBLISHED BY AVIALOGS.COM

WING

Outer Wing Panel Details

Figure & Index No.	Part Number	1 2 3 4 5 6 7 Nomenclature	Usage Code	Units Per Assy.
		Outer Wing Panel Details		
	85-4772-700	Wing Assembly—Outer LH (see fig. 2)	All	Ref
	85-4772-701	Wing Assembly—Outer RH (see fig. 2)	All	Ref
3-1	75-3590-620	Tip Assembly—Wing LH	GD	1
	75-3590-621	Tip Assembly—Wing RH	GD	1
	75-3590-807	Tip Assembly—Wing LH	VQ	1
	75-3590-808	Tip Assembly—Wing RH	VQ	1
	49-1777-409	Installation—Wing running light LH	Z	NP
	49-1777-410	Installation—Wing running light RH	Z	NP
2	37B4962-1	Lamp Assembly—Type A-8 upper LH (red) GFE	Z	1
	37B4962-2	Lamp Assembly—Type A-8 upper RH (green) GFE	Z	1
3	37B4962-3	Lamp Assembly—Type A-8 lower LH (red) GFE	Z	1
	37B4962-4	Lamp Assembly—Type A-8 lower RH (green) GFE	Z	1
	NO NUMBER	Lamp (type G-6 6CP 12-16V SC) GFE	Z	2
	NO NUMBER	Lamp (type T4 1-2 6CP 24V SC) GFE	Z	2
	AN515-6-7	Screw—Round head	Z	6
	2-1885	Installation—Position lamp LH	YG	NP
	2-1885-1	Installation—Position lamp RH	YG	NP
	2-1885-3	Lamp Assembly—LH	YG	1
	2-1885-4	Lamp Assembly—RH	YG	1
4	NO NUMBER	Lamp Assembly—Position (LH) (red)	YG	
		(Type A-9) (spec 94-32262) GFE	YG	1
	NO NUMBER	Lamp Assembly—Position (RH) (green)	YG	
		(Type A-9) (spec 94-32262) GFE	YG	1
5	2-1885-2	Fairing—Position lamp	YG	1
	AN505-4R7	Screw—82 degree flat head	YG	3
	AN531-8R8	Screw—Sheet metal flat head	YG	4
6	NAS55A22	Bolt—Close tolerance	All	4
	AN365-524	Nut—Self-locking	All	4
	AN960-516	Washer—Plain	All	8
7	75-4772-4	Cover—Gap (lower LH)	All	1
	75-4772-5	Cover—Gap (lower RH)	All	1
8	75-4772-13	Cover—Gap (upper LH and lower RH)	All	1
9	75-4772-14	Cover—Gap (lower LH and upper RH)	All	1
10	75-4772-17	Cover—Gap (upper LH)	All	1
	75-4772-18	Cover—Gap (upper RH)	All	1
11	75-4772-604	Cover Assembly—Gap nose (LH)	All	1
	75-4772-605	Cover Assembly—Gap nose (RH)	All	1
12	NAS221-8	Screw—Brazier head	All	142
13	AN510-10R10	Screw—82 degree flat head	All	16
	64-1424-531	Spar Assembly—Wing outboard front LH	All	1
	64-1424-532	Spar Assembly—Wing outboard front RH	All	1
14	21-6107	Plate Assembly—Wing tip hinge (upper front)	All	1
15	21-6107-1	Plate Assembly—Wing tip hinge (lower front)	All	1
16	21-6108	Plate Assembly—Wing tip hinge (upper rear)	All	1
17	21-6108-1	Plate Assembly—Wing tip hinge (lower rear)	All	1
18	3-11745	Clip—Lower rear station 33 (LH)	All	1
	3-11745-1	Clip—Lower rear station 33 (RH)	All	1
19	3-11746	Clip—Upper rear station 33 (LH)	All	1
	3-11746-1	Clip—Upper rear station 33 (RH)	All	1
20	21-5566-1	Clip—Stations 19A and 33 forward side	All	4
21	BAC1604-140	Spacer (station 33 upper and lower)	All	2
22	NAS54A7	Bolt—Close tolerance	All	8
23	NAS54A27DD	Bolt—Close tolerance	All	2
24	NAS54A6-5	Bolt—Close tolerance	All	4
25	3-11721	Terminal	All	2
26	NAS54A27	Bolt—Close tolerance	All	4
27	NAS56A27-5DD	Bolt—Close tolerance	All	5
28	NAS54A27-5	Bolt—Close tolerance	All	4
29	NAS56A30DD	Bolt—Close tolerance	All	5
	AN365-428	Nut—Self-locking	All	20
	AN365D428	Nut—Self-locking	All	2
	AN365D624	Nut—Self-locking	All	10
	64-1425-529	Spar Assembly—Wing outboard rear LH	All	1
	64-1425-530	Spar Assembly—Wing outboard rear RH	All	1
30	21-6094	Plate Assembly—Wing tip hinge rear LH	All	2
31	21-6094-1	Plate Assembly—Wing tip hinge rear RH	All	2
32	41-9669-2	Clip—Lower rear station 33	All	1
33	41-9670-2	Clip—Upper rear station 33	All	1
34	3-11745-2	Clip—Station 33 lower front	All	1
35	3-11746-2	Clip—Station 33 upper front	All	1
36	BAC1604-108	Spacer (station 33 upper and lower)	All	2
37	BAC1604-140	Spacer (station 33 upper and lower)	All	2
38	NAS54A7	Bolt—Close tolerance	All	16
39	NAS54A27-5DD	Bolt—Close tolerance	All	4
	AN365-428	Nut—Self-locking	All	16
	AN365D428	Nut—Self-locking	All	4
40	3-11721-1	Terminal	All	2
41	41-9667	Clip—Station 19A (upper rear)	All	1
42	41-9667-1	Clip—Station 19A (lower rear)	All	1
43	NAS54A26-5	Bolt—Close tolerance	All	3
44	NAS54A27	Bolt—Close tolerance	All	3
45	NAS56A27-5DD	Bolt—Close tolerance	All	6
46	NAS56A30DD	Bolt—Close tolerance	All	6
	AN365-428	Nut—Self-locking	All	6
	AN365D624	Nut—Self-locking	All	12

PUBLISHED BY AVIALOGS.COM

WING

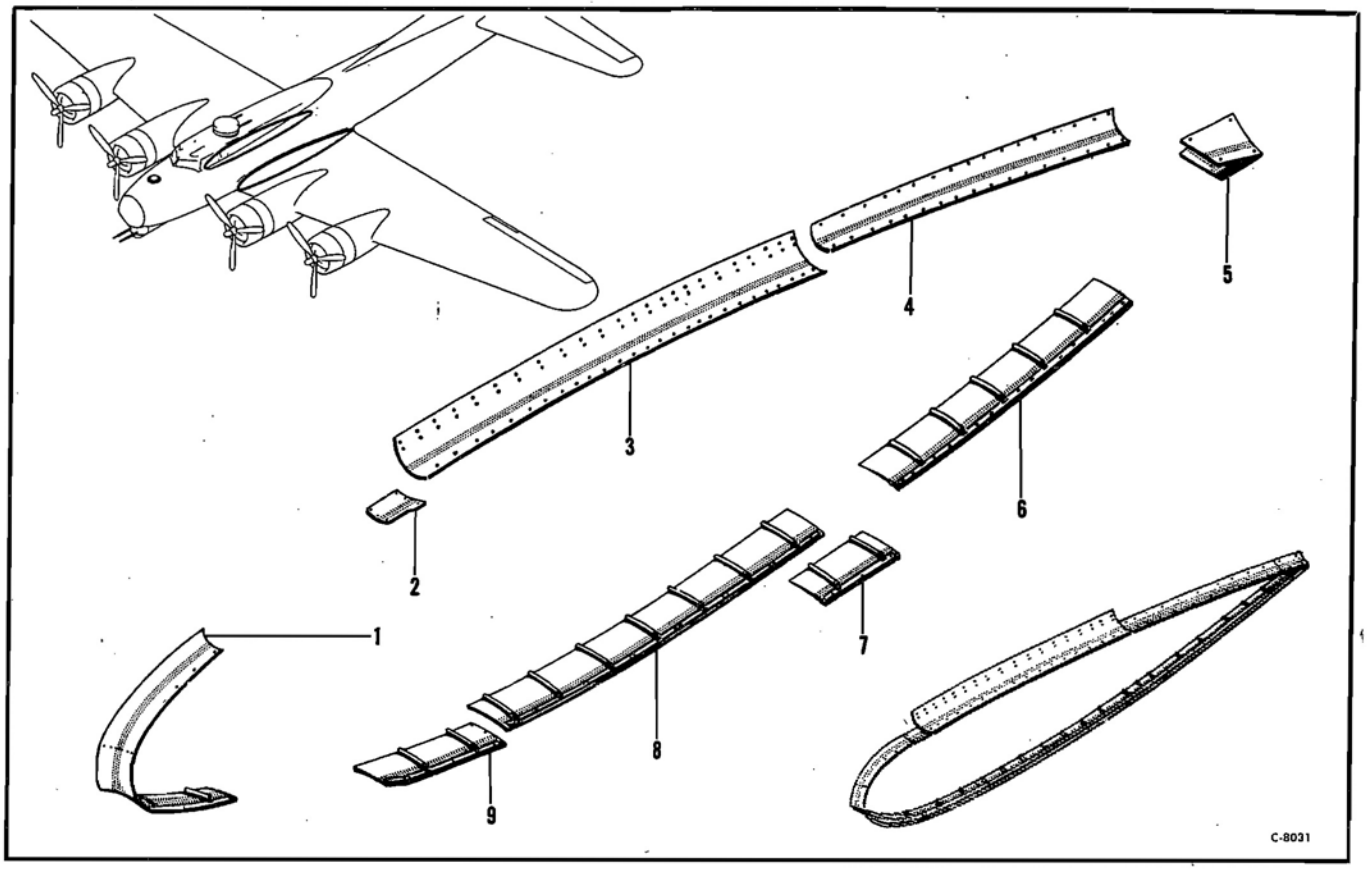

Figure 4—Wing Gap Cover

Wing Gap Cover

Figure & Index No.	Part Number	1 2 3 4 5 6 7 Nomenclature	Usage Code	Units Per Assy.
	64-1031	Installation—Wing gap cover LH (see fig. 2)	All	NP
	64-1031-1	Installation—Wing gap cover RH (see fig. 2)	All	NP
4-1	64-1031-400	Cover Assembly—Leading edge LH	Y	1
	64-1031-401	Cover Assembly—Leading edge RH	Y	1
	64-1031-535	Cover Assembly—Leading edge LH	WG	1
	64-1031-536	Cover Assembly—Leading edge RH	WG	1
	AN526-1032R10	Screw—Truss head	All	34
2	64-1031-32	Door—LH	Y	1
	64-1031-33	Door—RH	Y	1
	64-1031-553	Door—LH	WG	1
	64-1031-554	Door—RH	WG	1
	AN526-1032R10	Screw—Truss head	All	7
3	64-1031-425	Cover Assembly—Upper center LH	All	1
	64-1031-426	Cover Assembly—Upper center RH	All	1
	AN526-1032R10	Screw—Truss head	All	40
4	64-1031-538	Cover Assembly—Upper rear LH	All	1
	64-1031-537	Cover Assembly—Upper rear RH	All	1
	AN526-1032R10	Screw—Truss head	All	34
5	64-1031-546	Cover Assembly—Trailing edge LH	All	1
	64-1031-547	Cover Assembly—Trailing edge RH	All	1
	AN526-1032R10	Screw—Truss head	All	4
6	64-1031-500	Cover Assembly—Lower rear LH	All	1
	64-1031-501	Cover Assembly—Lower rear RH	All	1
	AN526-1032R10	Screw—Truss head	All	26
7	64-1031-418	Door Assembly—Access LH	All	1
	64-1031-419	Door Assembly—Access RH	All	1
	AN526-1032R10	Screw—Truss head	All	9
8	64-1031-410	Cover Assembly—Lower center LH	All	1
	64-1031-411	Cover Assembly—Lower center RH	All	1
	AN526-1032R10	Screw—Truss head	All	29
9	64-1031-408	Cover Assembly—Lower front LH	All	1
	64-1031-409	Cover Assembly—Lower front RH	All	1
	AN526-1032R10	Screw—Truss head	All	9

PUBLISHED BY AVIALOGS.COM

WING

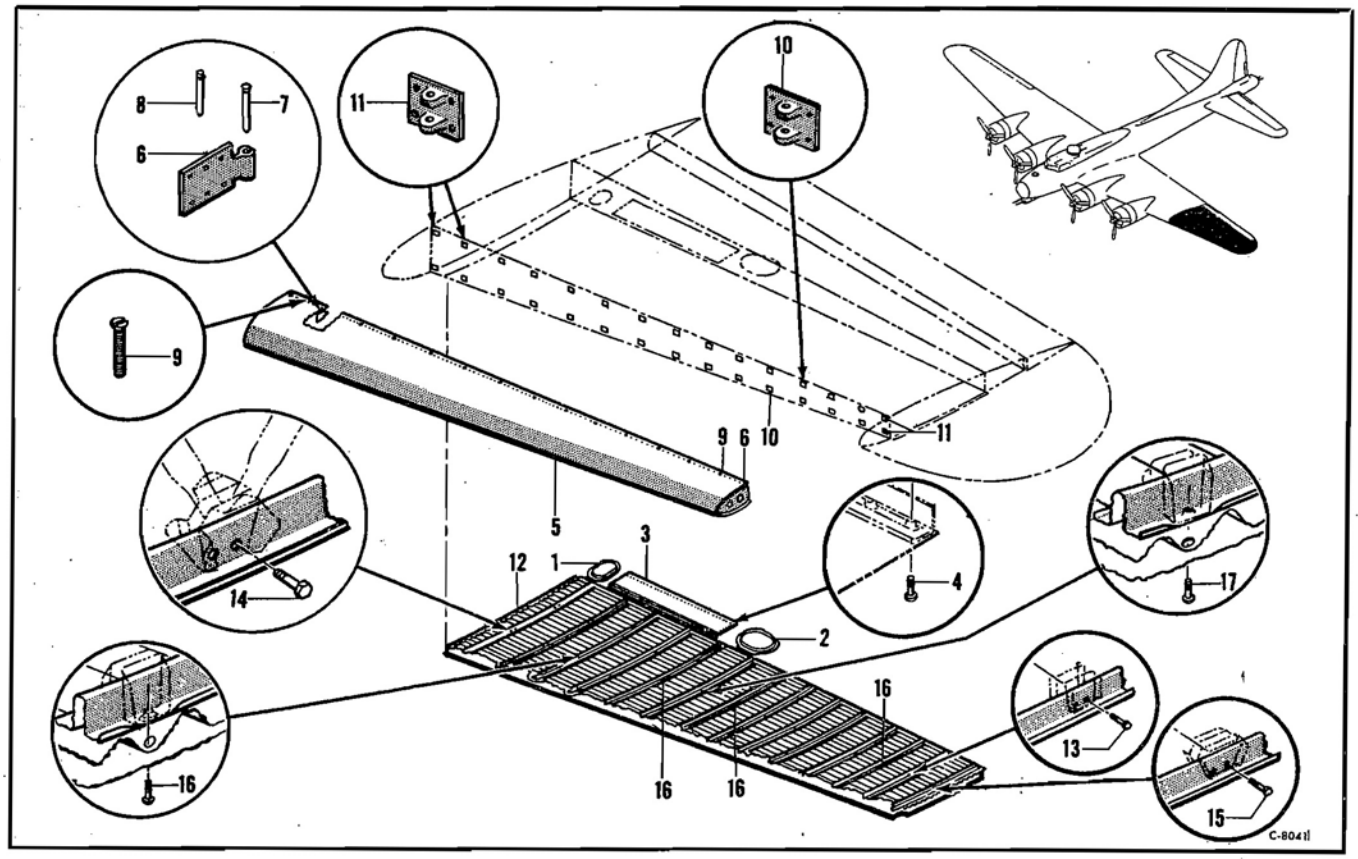

Figure 5—Outer Wing Panel Access Provisions

Outer Wing Panel Access Provisions

Figure & Index No.	*Part Number*	*1 2 3 4 5 6 7 Nomenclature*	*Usage Code*	*Units Per Assy.*
		Outer Wing Panel Access Provisions		
	85-4772-700	Wing Assembly—Outer LH (see fig. 2)	All	Ref
	85-4772-701	Wing Assembly—Outer RH (see fig. 2)	All	Ref
	9-3599	Installation—Inspection door station 19A-20 LH	All	NP
	9-3599-1	Installation—Inspection door station 19A-20 RH	All	NP
5-1	6-8946	Door Assembly—Inspection	DC	1
	6-8946-5	Door Assembly—Inspection	OO	1
	14-2053	Installation—Inspection door station 24-25 LH	All	NP
	14-2053-1	Installation—Inspection door station 24-25 RH	All	NP
2	6-9219	Door Assembly—Inspection	DC	1
	6-9219-10	Door Assembly—Inspection	OO	1
	15-10430	Installation—Fuel connections door	All	NP
	15-10430-1	Installation—Fuel connections door	All	NP
3	15-10430-2	Door Assembly—Inspection LH	All	1
	15-10430-3	Door Assembly—Inspection RH	All	1
4	BAC1470-10-8S	Screw—Button head recessed	All	52
	AN960D10L	Washer—Plain	All	52
	15-7475	Installation—Nose stations 19A-33 LH	All	NP
	15-7475-1	Installation—Nose stations 19A-33 RH	All	NP
5	15-7475-2	Nose Assembly—LH	All	1
	15-7475-11	Nose Assembly—RH	All	1
6	1-18112	Terminal—Nose rib	All	30
7	21-5743	Pin—Nose rib	J	30
8	3-24415	Pin Assembly—Nose rib	OF	30
9	AN510-10R8	Screw—Flat head	All	326
	64-1424-531	Spar Assembly—Wing outboard front LH (see fig. 3)	All	Ref
	64-1424-532	Spar Assembly—Wing outboard front RH (see fig. 3)	All	Ref
10	21-5566	Clip—Wing rib stations 20-32	All	26
11	21-5566-1	Clip—Wing rib stations 19A and 33	All	4
	65-4774	Installation—Panel stations 19-33 lower LH	All	NP
	65-4774-1	Installation—Panel stations 19-33 lower RH	All	NP
12	65-4774-553	Panel Assembly—LH	All	1
	65-4774-554	Panel Assembly—RH	All	1
13	NAS54A7-5DD	Bolt—Close tolerance	All	2
14	NAS54A10-5DD	Bolt—Close tolerance	All	8
15	NAS54A13-5DD	Bolt—Close tolerance	All	2
	AN365D428	Nut—Self-locking	All	12
	AN960D416	Washer—Plain	All	12
16	BAC1470-10-8S	Screw—Button head	All	24
17	BAC1470-10-10S	Screw—Button head	All	2
	AN960D10	Washer—Plain	All	26

PUBLISHED BY AVIALOGS.COM

WING

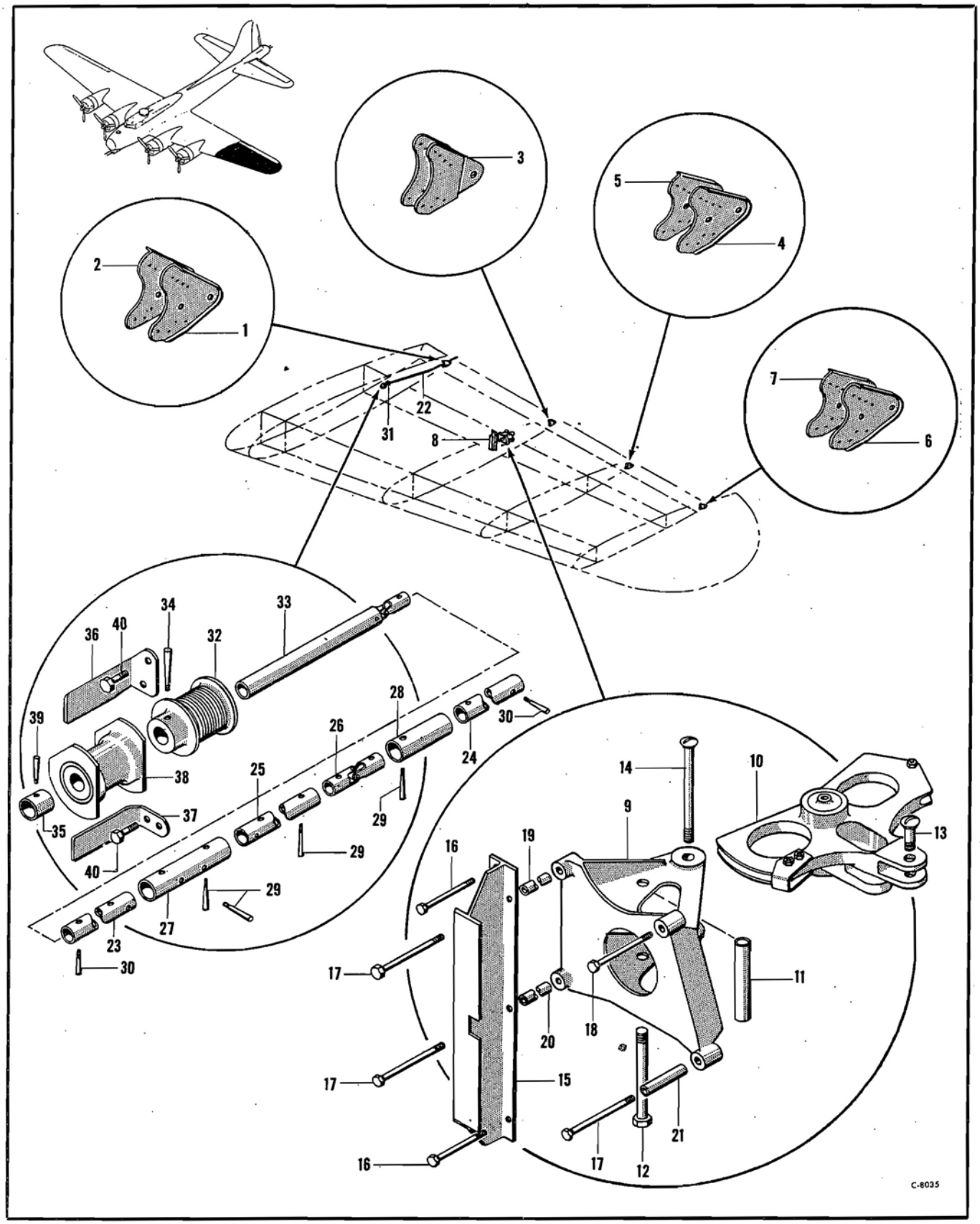

Figure 6—Outer Wing Panel Aileron Provisions

PUBLISHED BY AVIALOGS.COM

WING

Outer Wing Panel Aileron Provisions

Figure & Index No.	Part Number	1 2 3 4 5 6 7 Nomenclature	Usage Code	Units Per Assy.
		Outer Wing Panel Aileron Provisions		
	85-4772-700	Wing Assembly—Outer LH (see fig. 2)	All	Ref
	85-4772-701	Wing Assembly—Outer RH (see fig. 2)	All	Ref
	94-1128-419	Installation—Station 20 rib (LH)	All	NP
	94-1128-420	Installation—Station 20 rib (RH)	All	NP
	94-1128-422	Rib Assembly—Tail LH	All	1
	94-1128-421	Rib Assembly—Tail RH	All	1
6-1	21-5833	Bracket—LH	T	1
	21-5833-1	Bracket—RH	T	1
2	21-5834	Bracket—LH	T	1
	21-5834-1	Bracket—RH	T	1
	21-5833-2	Bracket—LH	NG	1
	21-5833-3	Bracket—RH	NG	1
	21-5834-2	Bracket—LH	NG	1
	21-5834-3	Bracket—RH	NG	1
	68-763-419	Installation—Station 25 rib (LH)	All	NP
	68-763-420	Installation—Station 25 rib (RH)	All	NP
	68-763-422	Rib Assembly—Tail LH	All	1
	68-763-421	Rib Assembly—Tail RH	All	1
3	61-5837	Bracket—LH	T	1
	61-5837-1	Bracket—RH	T	1
	3-23080	Bracket Assembly—LH	NG	1
	3-23080-1	Bracket Assembly—RH	NG	1
	68-767-16	Installation—Station 29 compression rib (LH)	All	NP
	68-767-17	Installation—Station 29 compression rib (RH)	All	NP
	68-767-18	Rib Assembly—Tail LH	All	1
	68-767-19	Rib Assembly—Tail RH	All	1
4	21-5835	Bracket (LH)	T	1
	21-5835-1	Bracket (RH)	T	1
5	21-5836	Bracket (LH)	T	1
	21-5836-1	Bracket (RH)	T	1
	21-5835-2	Bracket (LH)	NG	1
	21-5835-3	Bracket (RH)	NG	1
	21-5836-2	Bracket (LH)	NG	1
	21-5836-3	Bracket (RH)	NG	1
	68-771-16	Installation—Station 33 compression rib (LH)	All	NP
	68-771-17	Installation—Station 33 compression rib (RH)	All	NP
	68-771-18	Rib Assembly—Tail LH	All	1
	68-771-19	Rib Assembly—Tail RH	All	1
6	21-5835	Bracket (LH)	T	1
	21-5835-1	Bracket (RH)	T	1
7	21-5836	Bracket (LH)	T	1
	21-5836-1	Bracket (RH)	T	1
	21-5835-2	Bracket (LH)	NG	1
	21-5835-3	Bracket (RH)	NG	1
	21-5836-2	Bracket (LH)	NG	1
	21-5836-3	Bracket (RH)	NG	1
8	55-6341	Installation—Aileron control (LH)	All	NP
	55-6341-1	Installation—Aileron control (RH)	All	NP
	55-6341-400	Control Assembly—LH	All	1
	55-6341-401	Control Assembly—RH	All	1
9	6-8365	Support—Aileron control (LH)	All	1
	6-8365-1	Support—Aileron control (RH)	All	1
10	8-1262-2	Quadrant Assembly—Aileron control (LH)	All	1
	8-1262-3	Quadrant Assembly—Aileron control (RH)	All	1
11	55-6341-8	Spacer	All	1
12	AN6-41A	Bolt—Aircraft	All	1
	AN365-624	Nut—Self-locking	All	1
13	AN25-21	Bolt—Clevis	All	1
14	AN25-66	Bolt—Clevis	All	1
	AN320-5	Nut—Aircraft shear	All	2
	AN960-516	Washer—Plain	All	1
15	55-6341-402	Reinforcement—LH	All	1
	55-6341-403	Reinforcement—RH	All	1
16	AN3-25A	Bolt—Aircraft	All	3
17	AN3-34A	Bolt—Aircraft	All	3
18	NAS53A34-5	Bolt—Close tolerance	All	1
	AN365-1032	Nut—Self-locking	All	7
	AN960-10	Washer—Plain	All	2
19	BAC1603-133	Spacer	All	1
20	BAC1603-136	Spacer	All	1
21	BAC1603-137	Spacer	All	1
22	65-3584	Installation—Aileron tab control (LH wing only)	All	NP
	65-3584-501	Tube Assembly—Aileron tab control	All	1
23	65-3584-500	Tube—Forward	All	1
24	65-3584-2	Tube—Aft	All	1
25	65-3584-3	Tube—Center	All	1
26	AN270B10	Joint—Aircraft universal	All	1
27	65-3584-7	Sleeve—Forward	All	1
28	65-3584-4	Sleeve—Aft	All	1
29	AN386-1-6A	Pin—Threaded taper	All	6
	AN364-1032	Nut—Thin self-locking	All	6
	AN975-3	Washer—Taper pin	All	6
30	AN386-1-6A	Pin—Threaded taper	All	2
	AN364-1032	Nut—Thin self-locking	All	2
	AN975-3	Washer—Taper pin	All	2
	64-1425	Spar Assembly—Wing outboard rear	All	1
31	7-1531-31	Installation—Aileron tab control drum	All	NP
	75-1531-5	Drum Assembly	All	1
32	1-18494	Drum	All	1
33	1-18580	Shaft Assembly—Drum support	All	1
34	AN386-2-12	Pin—Threaded taper	All	1
	AN320-3	Nut—Aircraft shear	All	1
	AN975-3	Washer—Taper pin	All	1
35	7-1531-1	Collar	All	1
36	75-1531-3	Guard	All	1
37	75-1531-4	Guard	All	1
38	51-247	Retainer Assembly—Ball bearing	All	1
39	AN386-1-7	Pin—Threaded taper	All	1
	AN320-3	Nut—Aircraft shear	All	1
	AN975-3	Washer—Taper pin	All	1
40	AN3-4A	Bolt—Aircraft	All	4
	AN365-1032	Nut—Self-locking	All	4

PUBLISHED BY AVIALOGS.COM

WING

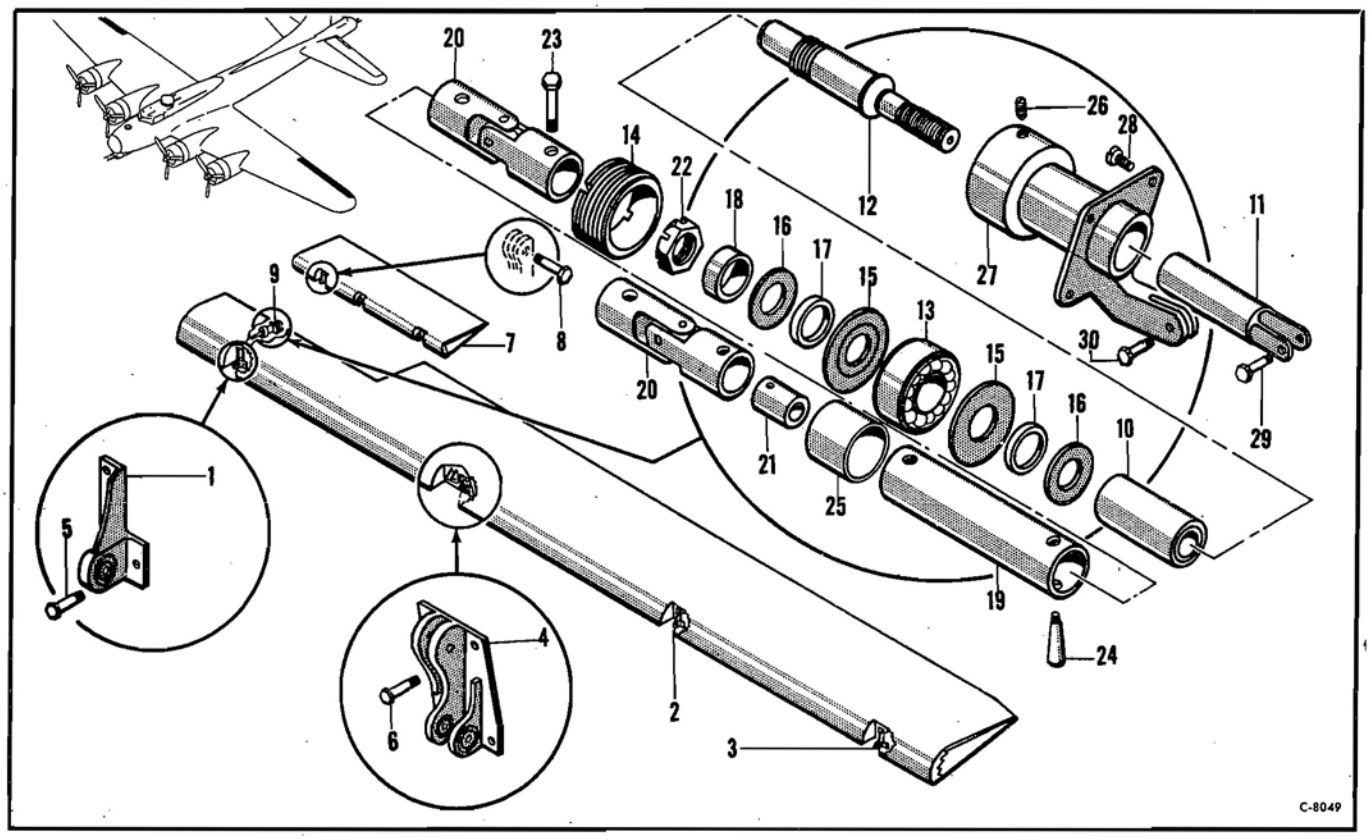

Figure 7—Fabric Covered Aileron Assembly LH

Fabric Covered Aileron Assembly LH

Figure & Index No.	Part Number	1 2 3 4 5 6 7 Nomenclature	Usage Code	Units Per Assy.
	58-784	Aileron Assembly—Fabric covered LH (see fig. 2)	All	Ref
	58-784-1	Aileron Assembly—Fabric covered RH (see fig. 2)	All	Ref
7-1	3-6481	Hinge Assembly—Aileron	All	1
2	3-6481-2	Hinge Assembly—Aileron	All	1
3	3-6481-4	Hinge Assembly—Aileron	All	1
4	3-11866	Mast Assembly—Aileron LH	All	1
	3-11866-1	Mast Assembly—Aileron RH	All	1
5	AN4-7A	Bolt—Aircraft	All	12
6	AN4-10A	Bolt—Aircraft	All	4
	AN365-428	Nut—Self-locking	All	16
	AN960-416	Washer—Plain	All	12
7	8-787-6	Tab Assembly—Trim (LH aileron only)	N	1
	8-787-9	Tab Assembly—Trim (LH aileron only)	WF	1
8	AN3-6	Bolt—Aircraft	All	2
	AN310-3	Nut—Aircraft castle	All	2
9	7-1536	Control Assembly—Aileron trim tab (LH aileron only)	All	1
10	1-18703	Sleeve Assembly—Grease retainer	All	1
11	1-18898	Nut Assembly—Aileron trim tab	All	1
12	1-18129	Screw—Aileron trim tab	All	1
13	1203	Bearing (SKF)	All	1
14	1-18935	Plug—Aileron trim tab	All	1
15	21-7312-5	Washer—Bearing retainer	All	2
16	21-7312-6	Washer—Bearing retainer	All	2
17	21-2366-58-44	Washer—Steel	All	2
18	7-1536-5	Spacer	All	1
19	7-1536-1	Tube	All	1
20	AN270B10	Joint—Light duty aircraft universal	All	2
21	7-1536-3	Filler	All	1
22	AN320-10	Nut—Aircraft shear	All	1
23	NAS53A10-5S	Bolt—Close tolerance	All	1
	AN365-1032	Nut—Self-locking	All	1
	AN960-10	Washer—Plain	All	1
24	AN386-1-6A	Pin—Threaded taper	All	1
	AN364-1032	Nut—Self-locking	All	1
	AN975-3	Washer—Taper pin	All	1
25	7-1536-2	Sleeve	All	1
26	AN565A8-4	Screw—Headless set machine	All	1
27	6-9440	Flange—Screw support	All	1
28	AN502-10-12	Screw—Drilled fillister head machine	All	4
29	NAS53-7-5	Bolt—Close tolerance	All	1
30	NAS53-10	Bolt—Close tolerance	All	1
	AN310-3	Nut—Aircraft castle	All	2

RESTRICTED
PUBLISHED BY AVIALOGS.COM

WING

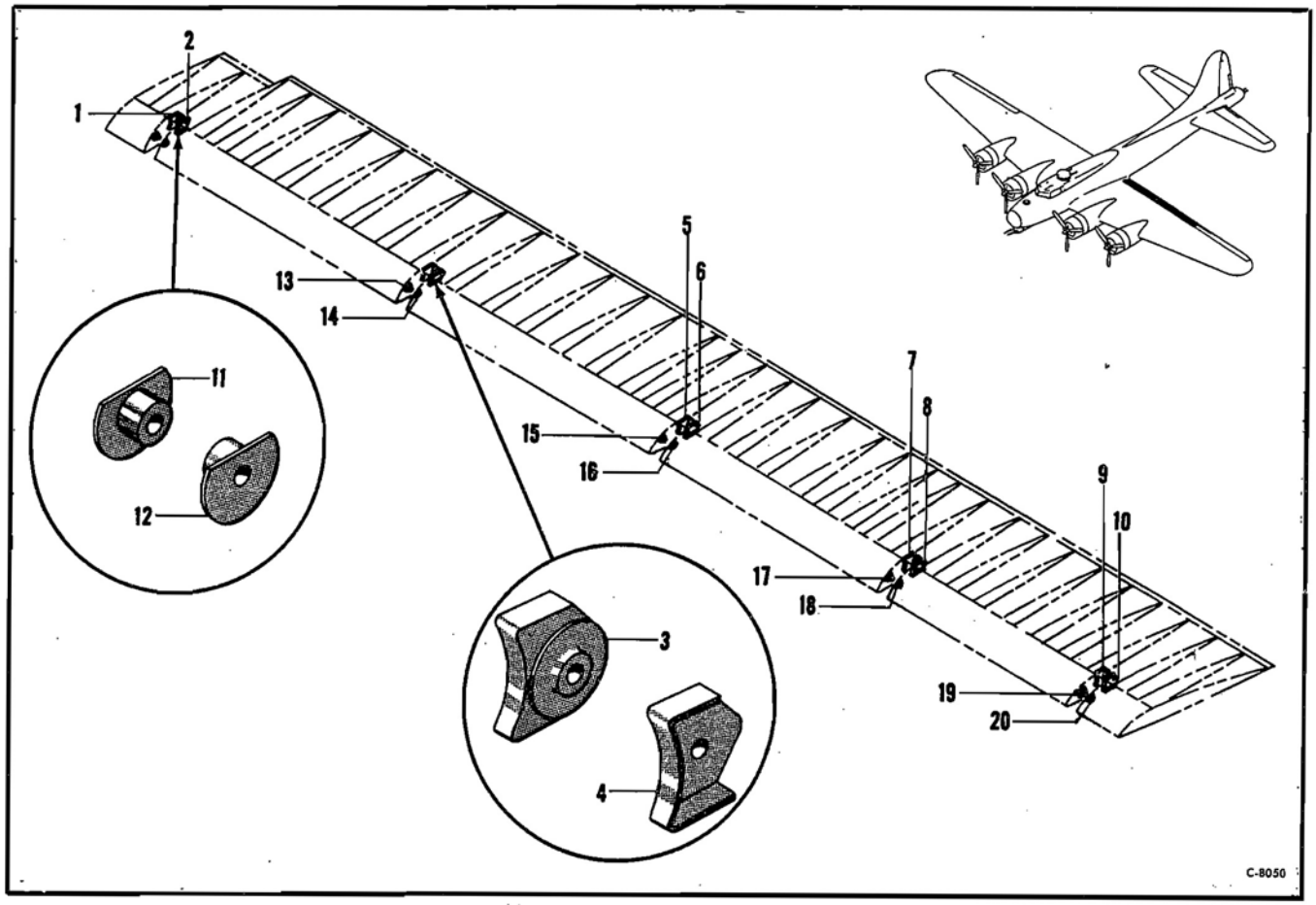

Figure 8—Wing Flap Assembly

Wing Flap Assembly

Figure & Index No.	*Part Number*	*1 2 3 4 5 6 7* *Nomenclature*	*Usage Code*	*Units Per Assy.*
	75-5127-617	Flap Assembly—Wing (LH) (see fig. 2)	All	Ref
	75-5127-618	Flap Assembly—Wing (RH) (see fig. 2)	All	Ref
8-1	41-6109	Hinge Assembly—Flap	All	1
2	41-6109-1	Hinge Assembly—Flap	All	1
3	41-6109-2	Hinge Assembly—Flap	All	1
4	41-6109-3	Hinge Assembly—Flap	All	1
5	41-6109-4	Hinge Assembly—Flap	All	1
6	41-6109-5	Hinge Assembly—Flap	All	1
7	41-6109-6	Hinge Assembly—Flap	All	1
8	41-6109-7	Hinge Assembly—Flap	All	1
9	41-6109-8	Hinge Assembly—Flap	All	1
10	41-6109-9	Hinge Assembly—Flap	All	1
	53-6667	Rib Assembly—Flap hinge LH	All	1
11	21-6264-9	Bushing—Flap hinge	All	1
	53-6667-1	Rib Assembly—Flap hinge RH	All	1
12	21-6264-9	Bushing—Flap hinge	All	1
	53-6667-2	Rib Assembly—Flap hinge LH	All	1
13	21-6264-9	Bushing—Flap hinge	All	1
	53-6667-3	Rib Assembly—Flap hinge RH	All	1
14	21-6264-9	Bushing—Flap hinge	All	1
	53-6667-4	Rib Assembly—Flap hinge LH	All	1
15	21-6264-9	Bushing—Flap hinge	All	1
	53-6667-5	Rib Assembly—Flap hinge RH	All	1
16	21-6264-9	Bushing—Flap hinge	All	1
	53-6667-6	Rib Assembly—Flap hinge LH	All	1
17	21-6264-9	Bushing—Flap hinge	All	1
	53-6667-7	Rib Assembly—Flap hinge RH	All	1
18	21-6264-9	Bushing—Flap hinge	All	1
	53-6667-8	Rib Assembly—Flap hinge LH	All	1
19	21-6264-9	Bushing—Flap hinge	All	1
	53-6667-9	Rib Assembly—Flap hinge RH	All	1
20	21-6264-9	Bushing—Flap hinge	All	1

RESTRICTED
PUBLISHED BY AVIALOGS.COM

WING

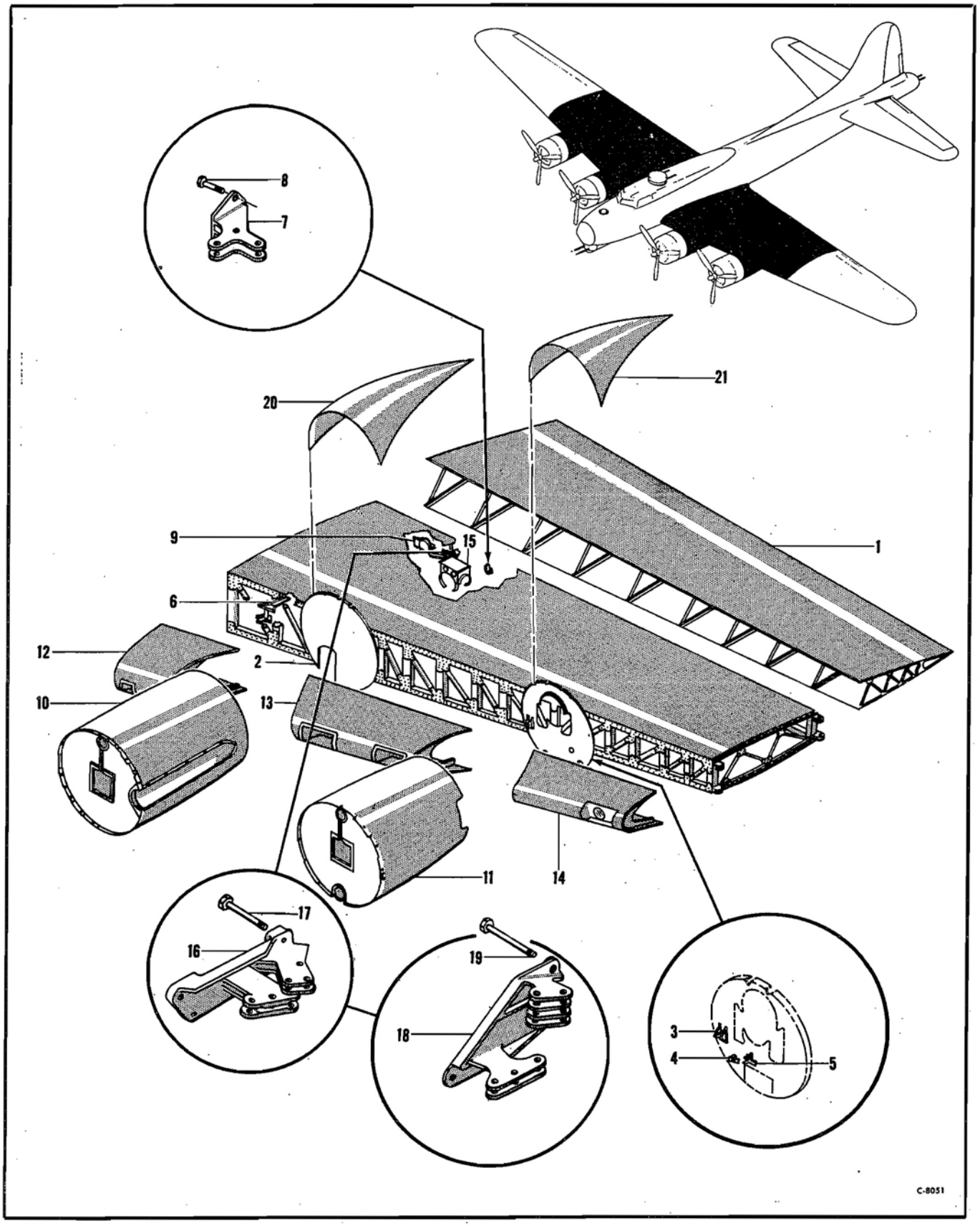

Figure 9—Inner Wing Assembly

PUBLISHED BY AVIALOGS.COM

WING

Inner Wing Assembly

Figure & Index No.	Part Number	1 2 3 4 5 6 7 Nomenclature	Usage Code	Units Per Assy.
	15-7975-81	Wing Assembly—Inner (LH) (see fig. 2)	QB	Ref
	15-7975-122	Wing Assembly—Inner (LH) (see fig. 2)	XM	Ref
	15-7975-82	Wing Assembly—Inner (RH) (see fig. 2)	QB	Ref
	15-7975-123	Wing Assembly—Inner (RH) (see fig. 2)	XM	Ref
9-1	15-7975-167	Trailing Edge Assembly (LH) (see fig. 12)	All	1
	15-7975-168	Trailing Edge Assembly (RH) (see fig. 12)	All	1
	78-581-744	Spar Assembly—Wing front inner (LH) (see fig. 10)	All	1
	78-581-745	Spar Assembly—Wing front inner (RH) (see fig. 10)	All	1
2	74-1607	Bulkhead Assembly—Outboard nacelle (LH)	All	1
	74-1607-1	Bulkhead Assembly—Outboard nacelle (RH)	All	1
3	9-3729	Installation—Supercharger control bracket (LH) (see fig. 40)	E	NP
	9-3729-1	Installation—Supercharger control bracket (RH) (see fig. 40)	E	NP
4	46-8013	Installation—Supercharger control bracket (LH) (see fig. 39)	E	NP
	46-8014	Installation—Supercharger control bracket (RH) (see fig. 40)	E	NP
5	6-8375	Installation—Supercharger control bracket (LH) (see fig. 39)	E	NP
	6-8376	Installation—Supercharger control bracket (RH) (see fig. 40)	E	NP
6	15-6343	Installation—Intercooler temperature control bracket (LH) (see fig. 37)	All	NP
	15-6343-1	Installation—Intercooler temperature control bracket (RH) (see fig. 37)	All	NP
	78-582-742	Spar Assembly—Wing rear inner (see fig. 10)	All	1
	78-582-743	Spar Assembly—Wing rear inner (see fig. 10)	All	1
	6-15544	Installation—Heat control bracket (LH)	XM	NP
	6-15544-1	Bracket Assembly	All	1
7	9-7288	Bracket—Cabin heat control	All	1
8	AN3-32A	Bolt—Aircraft	All	2
	AN365-1032	Nut—Self-locking	All	2
9	15-12965	Installation—Cabin heat control bracket (LH) (see fig. 56)	XM	NP
	15-12965-1	Installation—Cabin heat control bracket (RH) (see fig. 56)	XM	NP
10	85-4805	Installation—Inboard nacelle (LH) (see fig. 13 and 16)	All	NP
	85-4805-1	Installation—Inboard nacelle (RH) (see fig. 13 and 16)	All	NP
11	85-4806	Installation—Outboard nacelle (LH) (see fig. 15)	All	NP
	85-4806-1	Installation—Outboard nacelle (RH) (see fig. 15)	All	NP
12	74-1831	Installation—Wing nose station 1-3 (LH) (see fig. 11)	All	NP
	74-1831-1	Installation—Wing nose station 1-3 (RH) (see fig. 11)	All	NP
13	55-7483	Installation—Wing nose station 7-11 (LH) (see fig. 11)	All	NP
	55-7483-1	Installation—Wing nose station 7-11 (RH) (see fig. 11)	All	NP
14	15-7476-64	Installation—Wing nose station 15-19 (LH) (see fig. 11)	All	NP
	15-7476-65	Installation—Wing nose station 15-19 (RH) (see fig. 11)	All	NP
15	15-6623	Installation—Supercharger oil tank cradle (LH) (see fig. 38)	All	NP
	15-6623-1	Installation—Supercharger oil tank cradle (RH) (see fig. 38)	All	NP
	9-7298	Installation—Cabin heat control bracket (LH)	XM	NP
	9-7298-1	Bracket Assembly	All	1
16	9-7289	Bracket —Cabin heat control	All	1
17	AN3-34A	Bolt—Aircraft	All	3
	AN365-1032	Nut—Self-locking	All	3
	9-7257	Installation—Cabin heat control bracket (RH)	XM	NP
	9-7257-1	Bracket Assembly	All	1
18	14-3670	Bracket—Cabin heat control	All	1
19	AN3-32A	Bolt—Aircraft	All	3
	AN365-1032	Nut—Self-locking	All	3
	15-6333	Installation—Inboard nacelle upper fairing (LH)	All	NP
	15-6333-1	Installation—Inboard nacelle upper fairing (RH)	All	NP
20	15-6333-31	Fairing Assembly (LH)	All	1
	15-6333-32	Fairing Assembly (RH)	All	1
	55-5962	Installation—Outboard nacelle fairing (LH)	All	NP
	55-5962-1	Installation—Outboard nacelle fairing (RH)	All	NP
21	55-5962-427	Fairing Assembly (LH)	All	1
	55-5962-428	Fairing Assembly (RH)	All	1

PUBLISHED BY AVIALOGS.COM

WING

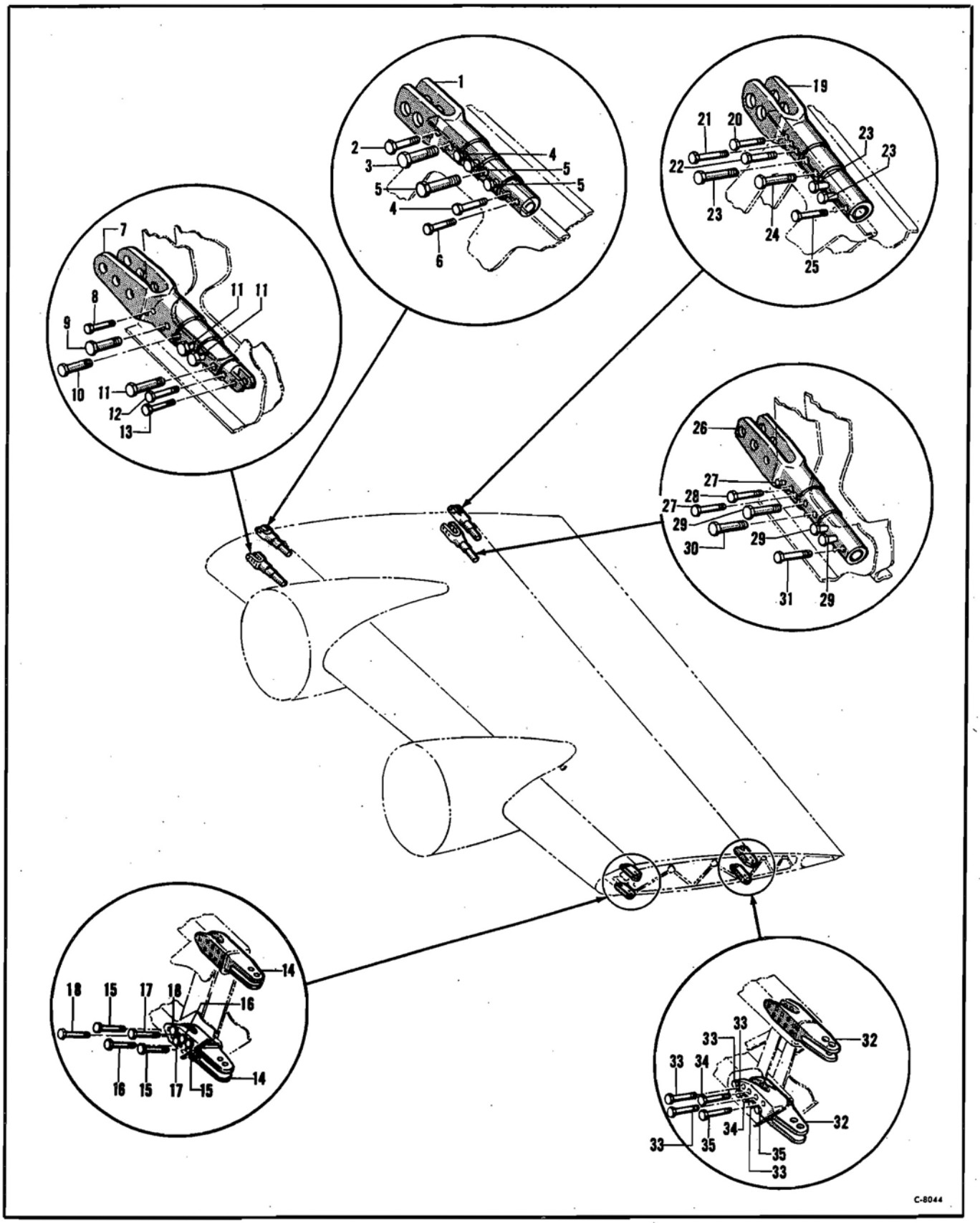

Figure 10—Inner Wing Attaching Terminals

PUBLISHED BY AVIALOGS.COM

WING

Inner Wing Attaching Terminals

Figure & Index No.	Part Number	1 2 3 4 5 6 7 Nomenclature	Usage Code	Units Per Assy.
		Inner Wing Attaching Terminals		
	78-581-744	Spar Assembly—Wing front inner LH (see fig. 9)	All	Ref
	78-581-745	Spar Assembly—Wing front inner RH (see fig. 9)	All	Ref
	75-4781	Joint Assembly—Wing spar front 1, 2, 3 upper LH	All	1
	75-4781-1	Joint Assembly—Wing spar front 1, 2, 3 upper RH	All	1
10-1	66-5531	Terminal—Upper LH	All	1
	66-5531-1	Terminal—Upper RH	All	1
2	NAS56A36	Bolt—Close tolerance	All	1
3	NAS62-44-5	Bolt—Close tolerance	All	1
4	BAC221-10-54	Bolt—Close tolerance	All	2
5	BAC221-12-55	Bolt—Close tolerance	All	3
6	NAS58A35-5	Bolt—Close tolerance	All	1
	65-4782-512	Joint Assembly—Wing spar front 1, 2, 3 lower LH	All	1
	65-4782-513	Joint Assembly—Wing spar front 1, 2, 3 lower RH	All	1
7	66-5532	Terminal—Lower LH	All	1
	66-5532-1	Terminal—Lower RH	All	1
8	NAS56A36	Bolt—Close tolerance	All	1
9	NAS60A43	Bolt—Close tolerance	All	1
10	BAC221-10-54	Bolt—Close tolerance	All	1
11	BAC221-12-55	Bolt—Close tolerance	All	3
12	NAS58A35-5	Bolt—Close tolerance	All	1
13	NAS56A34	Bolt—Close tolerance	All	1
	74-1433-601	Joint Assembly—Wing spar front 18 and 19 LH	All	1
	74-1433-602	Joint Assembly—Wing spar front 18 and 19 RH	All	1
14	3-11720-1	Terminal—Upper and lower	All	2
15	NAS55A32-5DD	Bolt—Close tolerance	All	6
16	NAS55-33-5DD	Bolt—Close tolerance	All	4
17	NAS54-34	Bolt—Close tolerance	All	4
18	NAS54A32-5	Bolt—Close tolerance	All	4
	78-582-742	Spar Assembly—Wing rear inner LH (see fig. 9)	All	Ref
	78-582-743	Spar Assembly—Wing rear inner RH (see fig. 9)	All	Ref
	75-4783	Joint Assembly—Wing spar rear 1 and 2 upper LH	All	1
	75-4783-1	Joint Assembly—Wing spar rear 1 and 2 upper RH	All	1
19	66-5529	Terminal—Upper LH	All	1
	66-5529-1	Terminal—Upper RH	All	1
20	NAS56A34	Bolt—Close tolerance	All	1
21	NAS57A41-5	Bolt—Close tolerance	All	1
22	NAS57A40	Bolt—Close tolerance	All	1
23	BAC221-10-54	Bolt—Close tolerance	All	3
24	BAC221-12-55	Bolt—Close tolerance	All	1
25	NAS58A35-5	Bolt—Close tolerance	All	1
	75-4784	Joint Assembly—Wing spar rear 1, 2, 3 lower LH	All	1
	75-4784-1	Joint Assembly—Wing spar rear 1, 2, 3 lower RH	All	1
26	66-5530	Terminal—Lower LH	All	1
	66-5530-1	Terminal—Lower RH	All	1
27	NAS56A34	Bolt—Close tolerance	All	2
28	NAS56A40-5	Bolt—Close tolerance	All	1
29	BAC221-10-54	Bolt—Close tolerance	All	3
30	BAC221-12-55	Bolt—Close tolerance	All	1
31	NAS58A35-5	Bolt—Close tolerance	All	1
	64-1434-508	Joint Assembly—Wing spar rear 18 and 19 LH	All	1
	64-1434-509	Joint Assembly—Wing spar rear 18 and 19 RH	All	1
32	3-11720	Terminal—Upper and lower	All	2
33	NAS55A32-5DD	Bolt—Close tolerance	All	10
34	NAS54A34	Bolt—Close tolerance	All	4
35	NAS54A32-5	Bolt—Close tolerance	All	4

PUBLISHED BY AVIALOGS.COM

WING

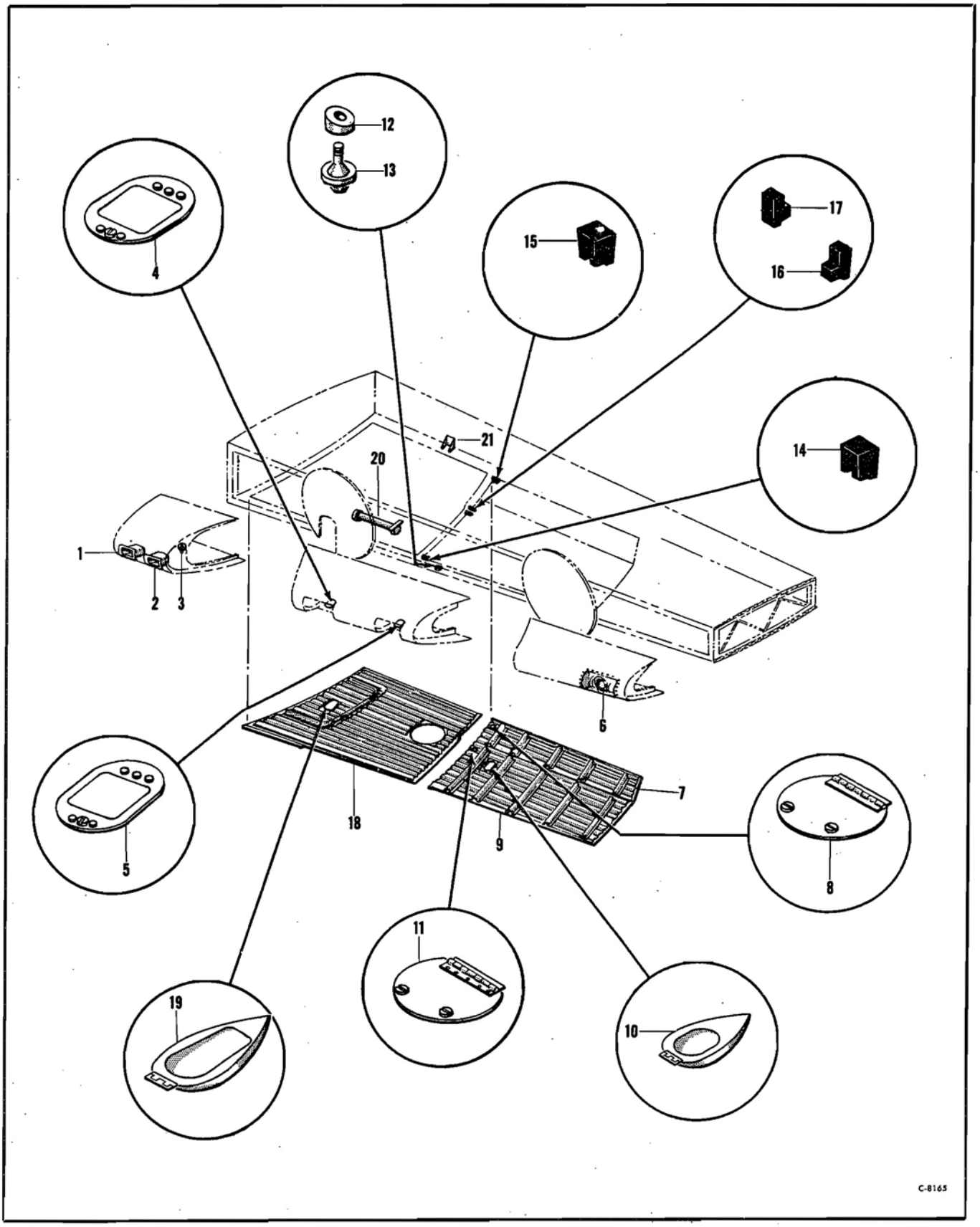

Figure 11. Inner Wing Access Provisions

PUBLISHED BY AVIALOGS.COM

WING

Inner Wing Access Provisions

Figure & Index No.	Part Number	1 2 3 4 5 6 7 Nomenclature	Usage Code	Units Per Assy.
		Inner Wing Access Provisions		
	15-7975-81	Wing Assembly—Inner (LH) (see fig. 2)	QB	Ref
	15-7975-122	Wing Assembly—Inner (LH) (see fig. 2)	XM	Ref
	15-7975-82	Wing Assembly—Inner (RH) (see fig. 2)	QB	Ref
	15-7975-123	Wing Assembly—Inner (RH) (see fig. 2)	XM	Ref
	74-1831	Installation—Wing nose station 1-3 (LH)	All	NP
	74-1831-1	Installation—Wing nose station 1-3 (RH)	All	NP
	74-1831-600	Nose Assembly (LH)	QB	1
	74-1831-624	Nose Assembly (LH)	XM	1
	74-1831-601	Nose Assembly (RH)	QB	1
	74-1831-625	Nose Assembly (RH)	XM	1
	64-1680	Installation—Carburetor and intercooler intake (LH)	All	NP
	64-1680-1	Installation—Carburetor and intercooler intake (RH)	All	NP
11-1	64-1680-500	Intake Assembly—Weld (LH)	All	1
	64-1680-503	Intake Assembly—Weld (RH)	All	1
2	64-1680-511	Intake Assembly (LH)	QB	1
	64-1680-524	Intake Assembly (LH)	XM	1
	64-1680-507	Intake Assembly (RH)	QB	1
	64-1680-519	Intake Assembly (RH)	XM	1
3	43-11344-400	Installation—Battery vent outlet (LH) (see fig. 47)	All	NP
	43-11344-2	Installation—Battery vent outlet (RH) (see fig. 47)	All	NP
	55-7483	Installation—Wing nose station 7-11 (LH)	All	NP
	55-7483-1	Installation—Wing nose station 7-11 (RH)	All	NP
	55-7483-400	Nose Assembly—Station 7-11 (LH)	R	1
	55-7483-411	Nose Assembly—Station 7-11 (RH)	BG	1
	55-7483-524	Nose Assembly—Station 7-11 (LH)	DO	1
	55-7483-526	Nose Assembly—Station 7-11 (RH)	AP	1
	55-7483-401	Nose Assembly—Station 7-11 (LH)	R	1
	55-7483-412	Nose Assembly—Station 7-11 (RH)	BG	1
	55-7483-525	Nose Assembly—Station 7-11 (LH)	DO	1
	55-7483-527	Nose Assembly—Station 7-11 (RH)	AP	1
4	15-7483-85	Door Assembly	All	1
5	15-7483-106	Door Assembly	All	1
	15-7476-64	Installation—Wing nose station 15-19 (LH)	All	NP
	15-7476-65	Installation—Wing nose station 15-19 (RH)	All	NP
	15-7476-66	Nose Assembly—Station 15-19 (LH)	B	1
	15-7476-67	Nose Assembly—Station 15-19 (RH)	B	1
	15-7476-80	Nose Assembly—Station 15-19 (LH)	BE	1
	15-7476-81	Nose Assembly—Station 15-19 (RH)	BE	1
6	55-7607-2	Installation—Landing and passing lamp (LH) (see fig. 44)	All	NP
	55-7607-3	Installation—Landing and passing lamp (RH) (see fig. 44)	All	NP
	75-4799	Installation—Fuel tank door station 7-11 (LH)	All	NP
	75-4799-1	Installation—Fuel tank door station 7-11 (RH)	All	NP
7	75-4799-600	Door Assembly (LH)	HD	1
	75-4799-706	Door Assembly (RH)	TQ	1
	75-4799-601	Door Assembly (LH)	HD	1
	75-4799-707	Door Assembly (RH)	TQ	1
	47-1309	Installation—Drain cock access door (LH)	All	NP
	47-1309-1	Installation—Drain cock access door (RH)	All	NP
8	6-9220	Door Assembly—Drain cock access	All	1
9	75-4799-602	Door Assembly (LH)	All	1
	75-4799-708	Door Assembly (RH)	All	1
	75-4799-603	Door Assembly (LH)	All	1
	75-4799-709	Door Assembly (RH)	All	1
	15-7784	Installation—Pump and drain access cover (LH)	All	NP
	15-7784-1	Installation—Pump and drain access cover (RH)	All	NP
10	15-7784-2	Cover Assembly	All	1
11	6-9220	Door Assembly—Drain cock access	VD	1
	6-18258	Door Assembly—Drain cock access	EP	1
	6-17091-2	Latch Assembly—Flush	All	1
	3-11738	Installation—Jacking cone (LH)	All	NP
	3-11738-1	Installation—Jacking cone (RH)	All	NP
12	41-9576	Collar—Jack cone	All	1
13	41-9656	Cone—Jacking	All	1
14	6-20786	Seal—Fuel wing station 7	TQ	1
15	6-20786-1	Seal—Fuel wing station 7	TQ	1
16	6-20786-2	Seal—Fuel wing station 7	TQ	1
17	6-20786-3	Seal—Fuel wing station 7	TQ	1
	95-4808-824	Installation—Wing panel station 1-6 lower (LH)	All	NP
	95-4808-825	Installation—Wing panel station 1-6 lower (RH)	All	NP
18	95-4808-600	Door Assembly (LH)	All	1
	95-4808-601	Door Assembly (RH)	All	1
	64-2054	Installation—Booster pump access cover (LH)	All	NP
	64-2054-1	Installation—Booster pump access cover (RH)	All	NP
19	64-2054-406	Cover Assembly	All	1
20	55-6249	Installation—Landing gear support (see fig. 18)	All	NP
	55-6249-1	Installation—Landing gear support (see fig. 18)	All	NP
21	65-6142	Installation—Supercharger control bracket (LH) (see fig. 41)	E	NP
	65-6154	Installation—Supercharger control bracket (RH) (see fig. 42)	E	NP

PUBLISHED BY AVIALOGS.COM

WING

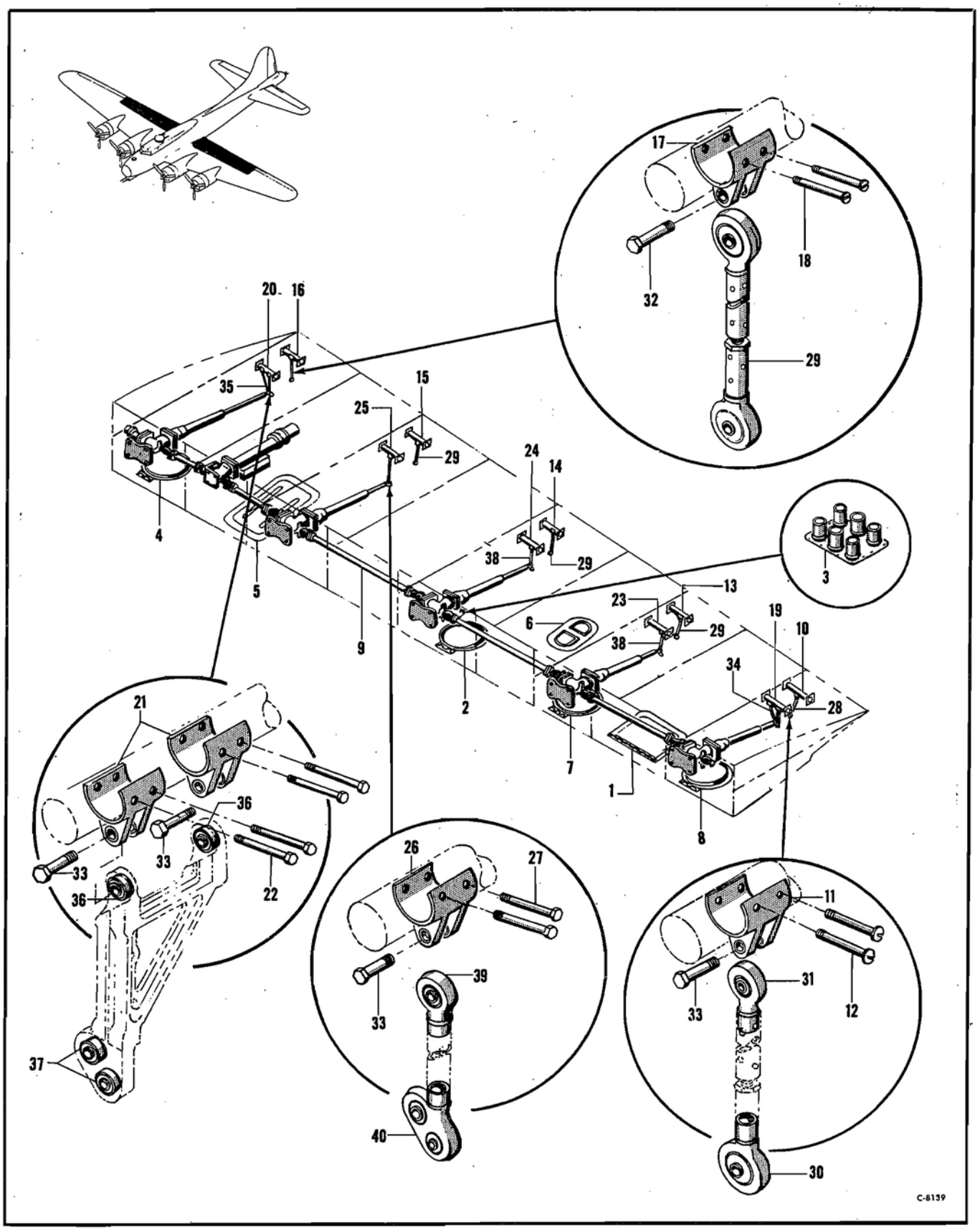

Figure 12—Trailing Edge Assembly

PUBLISHED BY AVIALOGS.COM

WING

Trailing Edge Assembly

Figure & Index No.	Part Number	1 2 3 4 5 6 7 Nomenclature	Usage Code	Units Per Assy.
	15-7975-167	Trailing Edge Assembly (LH) (see fig. 9)	All	Ref
	15-7975-168	Trailing Edge Assembly (RH) (see fig. 9)	All	Ref
	9-5598	Installation—Fuel connection door LH	All	NP
	9-5598-1	Installation—Fuel connection door RH	All	NP
12-1	9-5598-2	Door Assembly—LH	All	1
	9-5598-3	Door Assembly—RH	All	1
	54-2049-2	Installation—Inspection door station 9 to 10 LH	All	NP
	54-2049-3	Installation—Inspection door station 9 to 10 RH	All	NP
2	6-9290	Door Assembly—Inspection	All	1
8	3-14249-4	Flange Assembly—Tank vents (LH)	SC	1
	6-12874-6	Flange Assembly—Tank vents (LH)	VP	1
	3-14249-5	Flange Assembly—Tank vents (RH)	SC	1
	6-12874-7	Flange Assembly—Tank vents (RH)	VP	1
	14-2045	Installation—Inspection door station 1 to 2 (LH)	All	NP
	14-2045-1	Installation—Inspection door station 1 to 2 (RH)	All	NP
4	6-9290	Door Assembly—Inspection	All	1
	74-1337	Installation—Door station 4 to 5 wing LH	All	NP
	74-1337-1	Installation—Door station 4 to 5 wing RH	All	NP
5	14-1337-4	Door Assembly	All	1
	15-10439	Installation—Remote compass door (LH only)	All	NP
6	8-2548-1	Door Assembly—Remote compass	All	1
	54-2059	Installation—Inspection door station 13 to 14 (LH)	All	NP
	54-2059-1	Installation—Inspection door station 13 to 14 (RH)	All	NP
7	6-9290	Door Assembly—Inspection	All	1
	54-2058	Installation—Inspection door station 17 to 18 LH	All	NP
	54-2058-1	Installation—Inspection door station 17 to 18 RH	All	NP
8	6-9290	Door Assembly—Inspection	All	1
9	55-5442	Installation—Wing flap control (LH) (see fig. 20)	All	NP
	55-5442-1	Installation—Wing flap control (RH) (see fig. 20)	All	NP
	64-1490	Installation—Flap support (LH)	All	NP
	64-1490-1	Installation—Flap support (RH)	All	NP
10	64-1490-411	Tube Assembly (station 17 to 18 rear LH)	All	1
	64-1490-412	Tube Assembly (station 17 to 18 rear RH)	All	1
11	1-17351-1	Bracket Assembly—Flap support (LH)	All	1
	1-17351	Bracket Assembly—Flap support (RH)	All	1
	41-3018-523-8	Bushing	Y	2
	BAC344-5-253	Bushing	WG	2
12	AN24-9A	Bolt—Clevis	All	4
	AN364-428	Nut—Self-locking	All	4
13	64-1490-15	Tube Assembly (station 13 to 14 rear LH)	All	1
	64-1490-16	Tube Assembly (station 13 to 14 rear RH)	All	1
14	64-1490-19	Tube Assembly (station 9 to 10 rear LH)	All	1
	64-1490-20	Tube Assembly (station 9 to 10 rear RH)	All	1
15	64-1490-21	Tube Assembly (station 5 to 6 rear LH)	All	1
	64-1490-22	Tube Assembly (station 5 to 6 rear RH)	All	1
16	64-1490-27	Tube Assembly (station 1 to 2 rear LH)	All	1
	64-1490-28	Tube Assembly (station 1 to 2 rear RH)	All	1
17	61-6866-3	Bracket Assembly—Flap support	All	1
	BAC344-5-253	Bushing	All	2
18	AN25-9A	Bolt—Clevis	All	4
	AN364-524	Nut—Self-locking	All	4
19	64-1490-413	Tube Assembly (station 17 to 18 LH)	All	1
	64-1490-414	Tube Assembly (station 17 to 18 RH)	All	1
20	64-1490-423	Tube Assembly (station 1 to 2 LH)	All	1
	64-1490-424	Tube Assembly (station 1 to 2 RH)	All	1
21	61-6866	Bracket Assembly—Flap support	All	2
	41-3018-253-8	Bushing	Y	2
	BAC344-5-253	Bushing	WG	2
22	NAS54A24DD	Bolt—Close tolerance	All	4
	AN365D428	Nut—Self-locking	All	4
23	64-1490-17	Tube Assembly—Station 13 to 14 (LH)	All	1
	64-1490-18	Tube Assembly—Station 13 to 14 (RH)	All	1
24	64-1490-25	Tube Assembly—Station 9 to 10 (LH)	All	1
	64-1490-26	Tube Assembly—Station 9 to 10 (RH)	All	1
25	64-1490-29	Tube Assembly—Station 5 to 6 (LH)	All	1
	64-1490-30	Tube Assembly—Station 5 to 6 (RH)	All	1
26	61-6866	Bracket Assembly—Flap support	All	1
	41-3018-253-8	Bushing	Y	2
	BAC344-5-253	Bushing	WG	2
27	NAS54A24DD	Bolt—Close tolerance	All	2
	AN365D428	Nut—Self-locking	All	2
28	51-981-2	Rod Assembly—Adjustable flap (station 18)	All	1
29	51-981	Rod Assembly—Adjustable flap (stations 2, 6, 10 & 14)	All	4
	41-3572	Terminal Assembly—Control rod (used on 51-981)	All	2
30	41-3572	Terminal Assembly—Control rod (used on 51-981-2)	All	1
	AN200K5	Bearing—Heavy duty	All	1
31	21-6708-2	Terminal Assembly—Control rod (used on 51-981-2)	All	1
	AN200K4	Bearing—Heavy duty	All	1
32	AN5-14	Bolt—Aircraft	All	4
	AN310-5	Nut—Aircraft castle	All	4
33	AN4-14	Bolt—Aircraft	All	8
	AN310-4	Nut—Aircraft castle	All	8
34	6-9279-1	Swing Assembly—Flap support (station 18 LH)	All	1
35	6-9279	Swing Assembly—Flap support (station 2 LH)	All	1
	6-9279-2	Swing Assembly—Flap support (station 18 & 2 RH)	All	2
36	AN207D4	Bearing	All	2
37	AN200K4	Bearing—Heavy duty	All	2
38	21-6854-2	Arm Assembly—Flap support (stations 14, 10 & 6)	All	3
39	21-6708-2	Terminal Assembly—Flap support	EA	1
	AN200K4	Bearing—Heavy duty	All	1
40	41-3555	Terminal Assembly—Control rod	EA	1
	AN207D4	Bearing	All	2
	6-14963	Arm—Flap support	QH	1
	AN200K4	Bearing—Heavy duty	QH	1
	AN207D4	Bearing	QH	2

PUBLISHED BY AVIALOGS.COM

WING

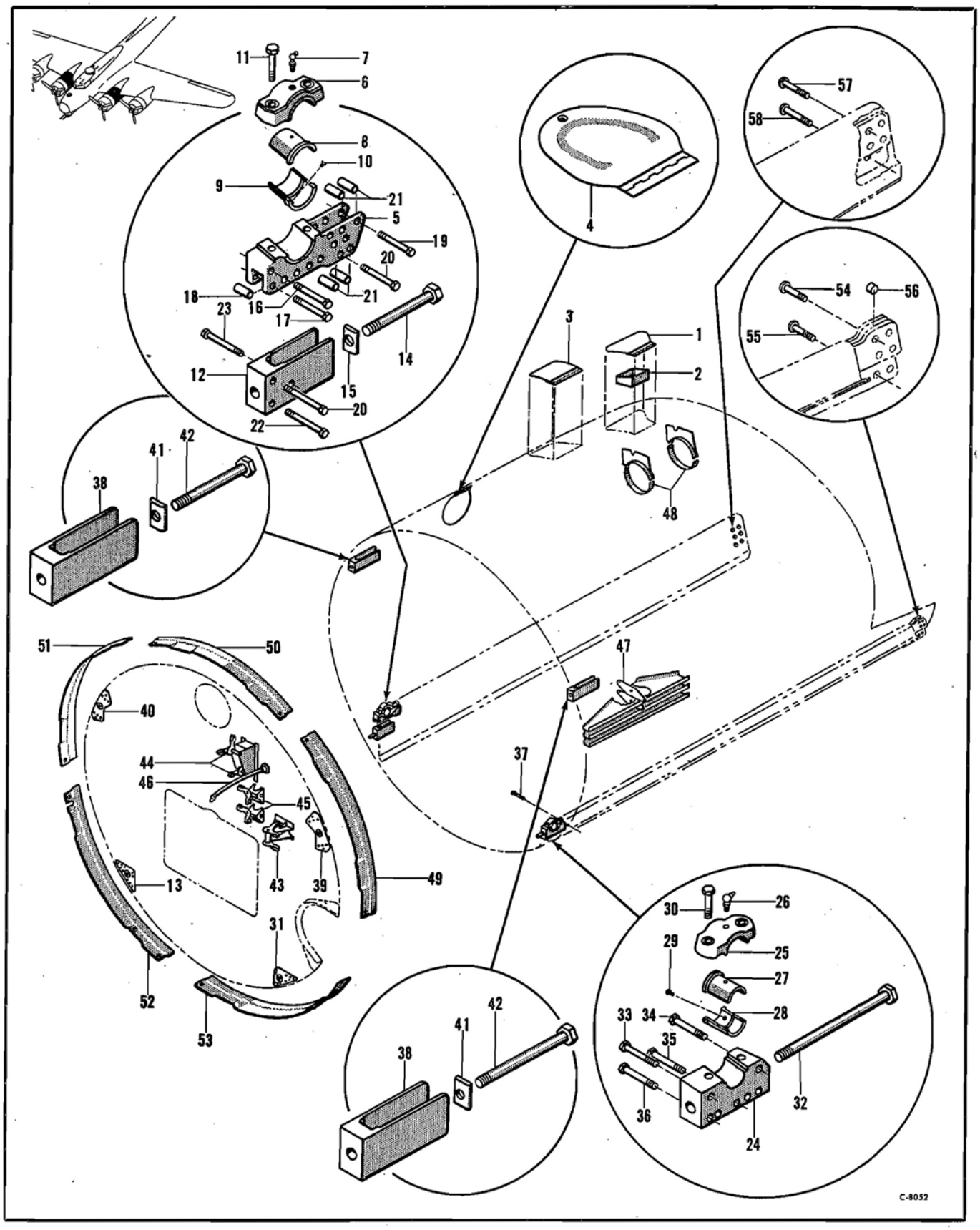

Figure 13—Inboard Nacelle Structure and Fittings

PUBLISHED BY AVIALOGS.COM

WING

Inboard Nacelle Structure and Fittings

Figure & Index No.	Part Number	1 2 3 4 5 6 7 Nomenclature	Usage Code	Units Per Assy.
		Inboard Nacelle Structure and Fittings		
	85-4805	Installation—Inboard nacelle LH (see fig. 9)	All	NP
	85-4805-1	Installation—Inboard nacelle RH (see fig. 9)	All	NP
	85-4805-720	Nacelle Assembly—LH	All	1
	85-4805-721	Nacelle Assembly—RH	All	1
	9-3266	Installation—Glycol tank filler door (LH)	QB	NP
13-1	9-3266-1	Door Assembly	All	1
2	9-3266-11	Pan Assembly	All	1
	9-10984	Installation—Limit switch access door (LH)	AR	NP
	9-10984-1	Installation—Limit switch access door (RH)	AR	NP
3	6-22134	Door Assembly	All	1
	1-14525-040-072	Latch—Flush type	All	1
	49-2876	Installation—Oil tank filler door (LH)	All	NP
	49-2876-1	Installation—Oil tank filler door (RH)	All	NP
4	49-2876-400	Door Assembly	All	1
	46-6158	Bearing Assembly—Drag strut support (LH)	All	1
	46-6158-1	Bearing Assembly—Drag strut support (RH)	All	1
5	46-6158-2	Block (LH)	All	1
	46-6158-3	Block (RH)	All	1
6	46-6158-400	Cap—Bearing	All	1
7	AN286-3	Fitting—Lubricator	All	1
8	41-9792-1	Bushing—Strut support	All	1
9	41-9792-2	Bushing—Strut support	All	1
10	AN505-8R6	Screw—82 degree flat head	All	1
11	41-4614-29-18	Bolt—Drilled head	All	2
12	41-3703	Terminal—Nacelle longeron	All	1
13	41-9541	Plate—Engine mount support	All	1
14	AN10-47	Bolt—Aircraft (engine mount)	All	1
15	41-3831	Filler—Bolt spacer	All	1
16	NAS55-23-5A	Bolt—Close tolerance	All	1
17	NAS55-24-5A	Bolt—Close tolerance	All	5
18	BAC1605-60	Spacer	All	5
	AN960-516	Washer—Plain	All	6
19	NAS54-22A	Bolt—Close tolerance	All	1
20	NAS54-23-5A	Bolt—Close tolerance	All	7
21	BAC1604-60	Spacer	All	4
22	75-4805-739	Bolt	All	1
	AN960-416	Washer—Plain	All	9
23	AN4-23A	Bolt—Aircraft	All	1
	AN366F428	Nut—Plate	All	1
	43-9588	Bearing Assembly—Drag strut support (LH)	All	1
	43-9588-1	Bearing Assembly—Drag strut support (RH)	All	1
24	43-9588-2	Block—Bearing (LH)	All	1
	43-9588-3	Block—Bearing (RH)	All	1
25	43-9588-400	Cap—Bearing	All	1
26	AN286-3	Fitting—Lubricator	All	1
27	41-3826-1	Bushing—Strut support	All	1
28	41-3826-2	Bushing—Strut support	All	1
29	AN505-8-6	Screw—82 degree flat head	All	1
30	21-8645-20-10	Bolt—3-8 24 drilled head	All	2
31	41-9541-1	Plate—Engine mount support	All	1
32	AN10-81	Bolt—Aircraft (engine mount)	All	1
33	NAS55S23-5A	Bolt—Close tolerance	All	1
34	NAS55S22-5	Bolt—Close tolerance	All	1
	AN960-516	Washer—Plain	All	2
35	NAS54-22-5	Bolt—Close tolerance	All	3
	AN960-416	Washer—Plain	All	3
36	75-4805-763	Bolt	All	2
	AN364-428	Nut—Thin self-locking	All	2
37	AN4-22A	Bolt—Aircraft	All	1
	AN365-428	Nut—Self-locking	All	1
38	41-3840	Terminal—Nacelle longeron	All	2
39	41-9542-1	Plate—Engine mount support	All	1
40	41-9542-2	Plate—Engine mount support	All	1
41	41-3831	Filler—Bolt spacer	All	2
42	AN10-47	Bolt—Aircraft (engine mount)	All	2
	55-8536	Firewall Assembly—Inboard nacelle (LH)	All	1
	55-8536-1	Firewall Assembly—Inboard nacelle (RH)	All	1
43	55-6330	Instal—Throt & mix. brkt (LH) (see fig. 187)	All	NP
	55-6331	Instal—Throt & mix. brkt (RH) (see fig. 187)	All	NP
44	6-8314-18	Instal—Throt & mix. brkt (LH) (see fig. 187)	All	NP
	6-8315	Instal—Throt & mix. brkt (RH) (see fig. 187)	All	NP
45	6-8311	Installation—Throt & mix. control brkt (LH) (see fig. 187)	All	NP
	6-8311-1	Installation—Throt & mix. control brkt (RH) (see fig. 187)	All	NP
46	37B6535	Tube Assembly GFE (see fig. 135)	KJ	1
47	65-6044	Instal—Eng cont inbd nac brkt (LH) (see fig. 187)	All	NP
	65-6044-1	Instal—Eng cont inbd nac brkt (RH) (see fig. 187)	All	NP
48	9-3265	Installation—Glycol tank brkt (LH) (see fig. 54)	QB	NP
	15-7639	Support Assembly—Inboard cowl (RH)	All	1
	15-7639-1	Support Assembly—Inboard cowl (LH)	All	1
49	15-7639-3	Segment (LH)	All	1
	15-7639-4	Segment (RH)	All	1
50	15-7639-9	Segment (LH)	All	1
	15-7639-11	Segment (RH)	All	1
51	15-7639-2	Segment (LH)	All	1
	15-7639-10	Segment (RH)	All	1
52	15-7639-7	Segment (LH)	All	1
	15-7639-8	Segment (RH)	All	1
53	15-7639-5	Segment (LH)	All	1
	15-7639-6	Segment (RH)	All	1
54	AN25-29	Bolt—Clevis	All	4
55	AN25-25	Bolt—Clevis	All	2
56	BAC1605-36	Spacer	All	3
	AN320-5	Nut—Aircraft shear	All	6
57	AN26-31	Bolt—Clevis	All	4
58	AN26-24	Bolt—Clevis	All	2
	AN320-6	Nut—Aircraft shear	All	6

PUBLISHED BY AVIALOGS.COM

WING

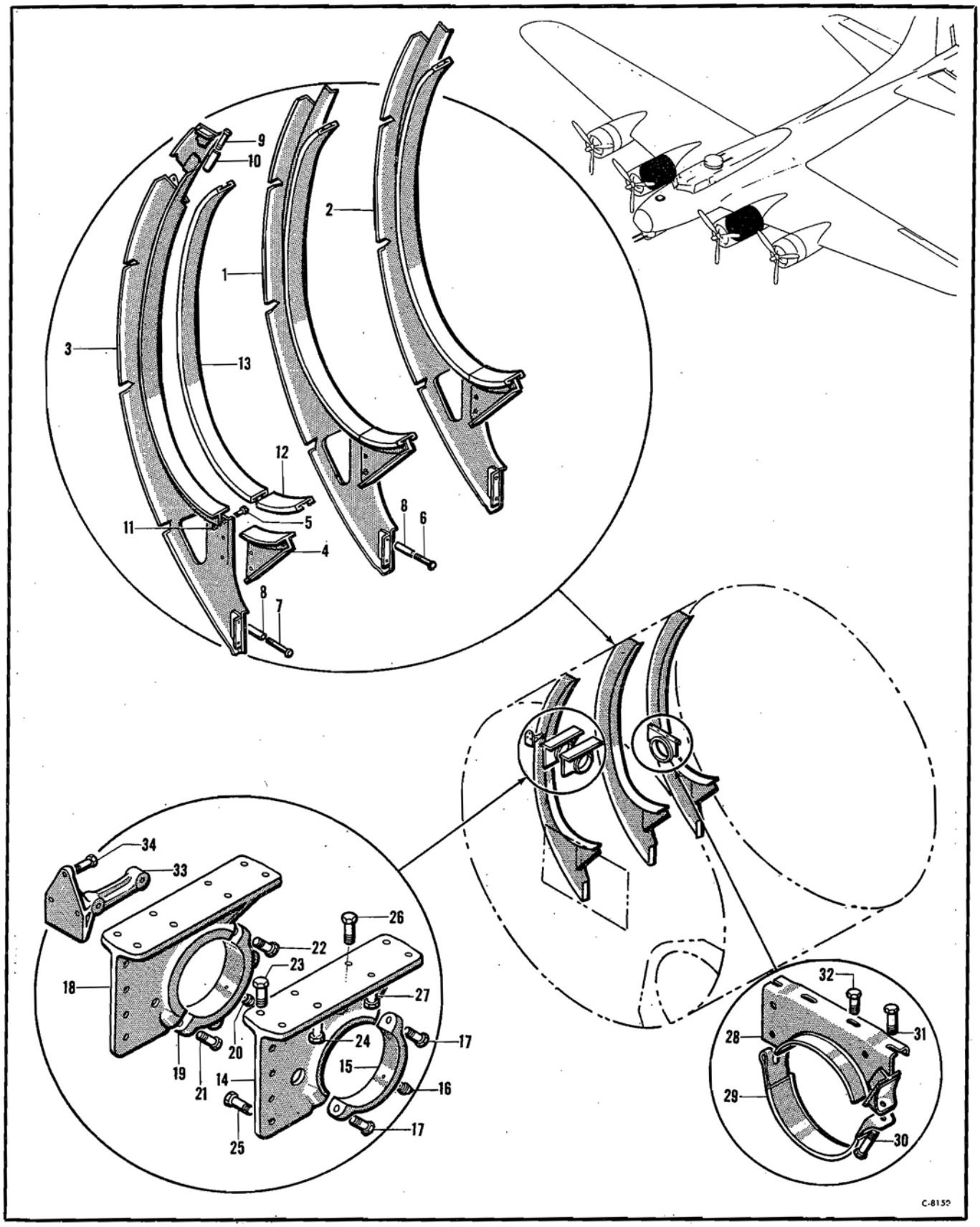

Figure 14—Inboard Nacelle Miscellaneous Supports

PUBLISHED BY AVIALOGS.COM

WING

Inboard Nacelle Miscellaneous Supports

Figure & Index No.	Part Number	1 2 3 4 5 6 7 Nomenclature	Usage Code	Units Per Assy.
		Inboard Nacelle Miscellaneous Supports		
	85-4805-720	Nacelle Assembly—LH (see fig. 13)	All	Ref
	85-4805-721	Nacelle Assembly—RH (see fig. 13)	All	Ref
	65-5915	Installation—Oil tank cradle inboard nacelle (LH)	All	NP
	65-5915-1	Installation—Oil tank cradle inboard nacelle (RH)	All	NP
14-1	65-5915-504	Cradle Assembly (Station 2C LH)	All	1
	65-5915-505	Cradle Assembly (Station 2C RH)	All	1
2	65-5915-502	Cradle Assembly (Station 2D LH)	All	1
	65-5915-503	Cradle Assembly (Station 2D RH)	All	1
3	65-5915-500	Cradle Assembly (Forward LH)	All	1
	65-5915-501	Cradle Assembly (Forward RH)	All	1
4	3-14997	Support Assembly—Oil tank cradle (LH)	All	3
	3-14997-1	Support Assembly—Oil tank cradle (RH)	All	3
5	AN3-5A	Bolt—Aircraft	All	11
6	AN3-21A	Bolt—Aircraft	All	4
7	AN3-22A	Bolt—Aircraft	All	2
8	BAC1603-91	Spacer—Number 10 bolt	All	6
9	NAS53A23-5	Bolt—Close tolerance	All	1
10	BAC1603-96	Spacer	All	1
11	AN365-1032	Nut—Self-locking	All	18
	AN960D10	Washer—Plain	All	15
12	1-16056-4-3	Cushion—Tank support	All	3
13	1-16056-28-6	Cushion—Tank support	All	3
	65-5299	Installation—Landing gear beam (LH)	All	NP
	65-5299-1	Installation—Landing gear beam (RH)	All	NP
	9-2958	Installation—Landing gear retracting screw support (LH)	All	NP
	9-2958-1	Installation—Landing gear retracting screw support (RH)	All	NP
	9-2958-2	Support Assembly (LH)	GC	1
	9-2958-3	Support Assembly (RH)	GC	1
14	9-2958-6	Support (LH)	All	1
	9-2958-7	Support (RH)	All	1
15	9-2958-8	Cap (LH)	All	1
	9-2958-9	Cap (RH)	All	1
16	AN286-2	Fitting—Lubricator	All	1
17	AN6H11	Bolt—Aircraft	All	2
	AN960-616	Washer—Plain	All	1
	9-2958-17	Support Assembly (LH)	RO	1
	9-2958-18	Support Assembly (RH)	RO	1
	9-2958-19	Support (LH)	All	1
	9-2958-20	Support (RH)	All	1
	9-2958-21	Cap (LH)	All	1
	9-2958-22	Cap (RH)	All	1
	AN286-2	Fitting—Lubricator	All	1
	AN6H11	Bolt—Aircraft	All	1
	AN6H10	Bolt—Aircraft	All	1
	AN960-616	Washer—Plain	All	2
	9-2958-4	Support Assembly (LH)	All	1
	9-2958-5	Support Assembly (RH)	All	1
18	9-2958-10	Support (LH)	All	1
	9-2958-11	Support (RH)	All	1
19	9-2958-12	Cap (LH)	All	1
	9-2958-13	Cap (RH)	All	1
20	AN286-2	Fitting—Lubricator	All	1
21	AN6H11	Bolt—Aircraft	All	1
22	AN6H10	Bolt—Aircraft	All	1
	AN960-616	Washer—Plain	All	2
23	NAS54A10	Bolt—Close tolerance	All	4
24	NAS54A7	Bolt—Close tolerance	All	4
25	NAS54A5-5	Bolt—Close tolerance	All	8
	AN365-428	Nut—Self-locking	All	16
	AN960-416	Washer—Plain	All	16
26	NAS55A11	Bolt—Close tolerance	All	7
27	NAS55A10	Bolt—Close tolerance	All	2
	AN365-524	Nut—Self-locking	All	8
	AN960-516	Washer—Plain	All	7
	6-13123	Installation—Landing gear motor support (LH)	All	NP
	6-13123-1	Installation—Landing gear motor support (RH)	All	NP
	6-13123-2	Support Assembly (LH)	All	1
	6-13123-3	Support Assembly (RH)	All	1
28	3-18572	Bracket Assembly—Landing gear motor support (LH)	All	1
	3-18572-1	Bracket Assembly—Landing gear motor support (RH)	All	1
29	51-83	Strap Assembly—Landing gear motor support	All	1
30	1-23035-2	Bolt—10-32 special	All	1
	AN3-13A	Bolt—Aircraft	All	1
	AN365-1032	Nut—Self-locking	All	1
31	AN3-5A	Bolt—Aircraft	All	2
32	AN3-4A	Bolt—Aircraft	All	2
	AN365-1032	Nut—Self-locking	All	4
33	3-11854	Bracket—Oil separator	All	1
34	AN3-7A	Bolt—Aircraft	All	3
	AN365-1032	Nut—Self-locking	All	3

PUBLISHED BY AVIALOGS.COM

WING

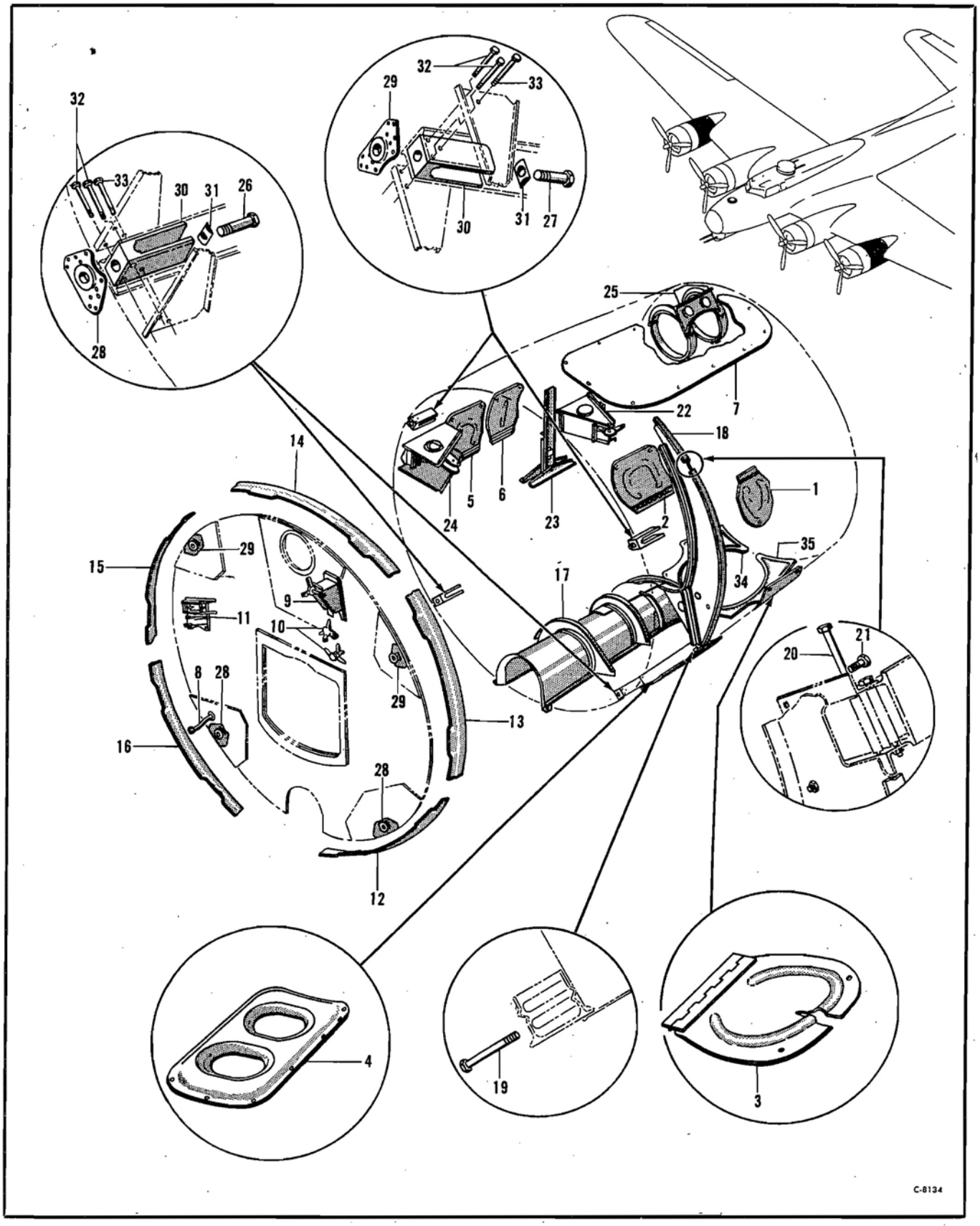

Figure 15—Outboard Nacelle

PUBLISHED BY AVIALOGS.COM

WING

Outboard Nacelle

Figure & Index No.	Part Number	1 2 3 4 5 6 7 Nomenclature	Usage Code	Units Per Assy.
	85-4806	Installation—Outboard nacelle (LH) (see fig. 9)	All	NP
	85-4806-1	Installation—Outboard nacelle (RH) (see fig. 9)	All	NP
	85-4806-700	Nacelle Assembly (outboard LH)	All	1
	85-4806-701	Nacelle Assembly (outboard RH)	All	1
	9-2901	Installation—Outboard oil tank filler door (LH)	All	NP
	9-2901-1	Installation—Outboard oil tank filler door (RH)	All	NP
15-1	9-2901-5	Door Assembly	All	1
	9-3044-1	Installation—Outboard nacelle access door (LH)	All	NP
	9-3044	Installation—Outboard nacelle access door (RH)	All	NP
2	9-3044-2	Door Assembly	All	1
	15-7994	Installation—Outboard nacelle access door (LH)	All	NP
	15-7994-1	Installation—Outboard nacelle access door (RH)	All	NP
3	15-7994-2	Door Assembly	All	1
	15-5665	Installation—Outboard nacelle door (LH)	All	NP
	15-5665-1	Installation—Outboard nacelle door (RH)	All	NP
4	15-5665-2	Door Assembly	All	1
	54-1766	Installation—Outboard nacelle access (LH)	All	NP
	54-1766-1	Installation—Outboard nacelle access (RH)	All	NP
5	54-1766-2	Door Assembly	All	1
6	54-1766-4	Door Assembly	All	1
	75-5025	Installation—Outboard nacelle door (LH)	All	NP
	75-5025-26	Installation—Outboard nacelle door (RH)	All	NP
7	75-5025-600	Door Assembly	All	1
	55-8535	Firewall Assembly—Outboard nacelle (LH)	All	1
	55-8535-1	Firewall Assembly—Outboard nacelle (RH)	All	1
8	37B6535	Tube Assembly—GFE (see fig. 135)	KJ	1
9	9-3093	Installation—Throttle & mixture bracket (see fig. 186)	All	NP
10	59-3088	Installation—Throttle & mixture bracket (LH) (see fig. 186)	All	NP
	9-3087	Installation—Throttle & mixture bracket (RH) (see fig. 186)	All	NP
11	55-6336	Installation—Engine control bracket (LH) (see fig. 186)	All	NP
	15-7688	Installation—Engine control bracket (RH)	All	NP
	15-7688-33	Bracket Assembly (see fig. 186)	All	1
	15-7638	Support Assembly—Outboard cowl (LH)	All	1
	15-7638-11	Support Assembly—Outboard cowl (RH)	All	1
12	15-7638-3	Segment (LH)	All	1
	15-7638-8	Segment (RH)	All	1
13	15-7638-1	Segment (LH)	All	1
	15-7638-6	Segment (RH)	All	1
14	15-7638-5	Segment (LH)	All	1
	15-7638-10	Segment (RH)	All	1
15	15-7638-4	Segment (LH)	All	1
	15-7638-9	Segment (RH)	All	1
16	15-7638-2	Segment (LH)	All	1
	15-7638-7	Segment (RH)	All	1
	75-5977-421	Installation—Shroud outboard nacelle (LH)	All	NP
	75-5977-422	Installation—Shroud outboard nacelle (RH)	All	NP
17	75-5977-600	Shroud Assembly—Spotweld (LH)	E	1
	75-5977-601	Shroud Assembly—Spotweld (RH)	E	1
	75-5977-602	Shroud Assembly—Spotweld (LH)	ZE	1
	75-5977-603	Shroud Assembly—Spotweld (RH)	ZE	1
	65-5982	Installation—Cradle outboard nacelle (LH)	All	NP
	65-5982-1	Installation—Cradle outboard nacelle (RH)	All	NP
18	65-5982-500	Cradle Assembly (LH)	All	1
	65-5982-501	Cradle Assembly (RH)	All	1
19	NAS53S22A	Bolt—Close tolerance	All	2
20	NAS53-23A	Bolt—Close tolerance	All	2
	BAC1603-96	Spacer	All	4
21	NAS53-56A	Bolt—Close tolerance	All	2
	AN960-10	Washer—Plain	All	9
	AN365-1032	Nut—Self-locking	All	6
22	9-3127	Installation—Intercooler temperature control bracket (LH) (see fig. 37)	All	NP
	49-3129	Installation—Intercooler temperature control bracket (RH) (see fig. 37)	All	NP
23	9-3126	Installation—Intercooler temperature control lever (LH) (see fig. 37)	All	NP
	9-3126-1	Installation—Intercooler temperature control lever (RH) (see fig. 37)	All	NP
24	55-6191	Installation—Engine controls bracket (LH) (see fig. 186)	All	NP
	55-6191-1	Installation—Engine controls bracket (RH) (see fig. 186)	All	NP
25	55-6162	Installation—Supercharger oil tank support (LH) (see fig. 38)	All	NP
	55-6162-1	Installation—Supercharger oil tank support (RH) (see fig. 38)	All	NP
26	AN10-46	Bolt—Aircraft (engine mount lower)	All	2
27	AN10-47	Bolt—Aircraft (engine mount upper)	All	2
28	41-9542	Plate (engine mount support lower)	All	2
29	41-9542-1	Plate (engine mount support upper)	All	2
30	41-3840	Terminal—Nacelle longeron	All	4
31	41-3831	Filler—Bolt spacer	All	4
32	NAS54-22-5	Bolt—Close tolerance	All	8
33	AN3-22A	Bolt—Aircraft	All	4
	9-3194	Installation—External cowling outboard supercharger (LH)	All	NP
	9-3194-1	Installation—External cowling outboard supercharger (RH)	All	NP
34	9-3194-2	Cowl—Inboard (LH)	All	1
	9-3194-3	Cowl—Inboard (RH)	All	1
35	9-3194-14	Cowl—Outboard (LH)	All	1
	9-3194-15	Cowl—Outboard (RH)	All	1

PUBLISHED BY AVIALOGS.COM

WING

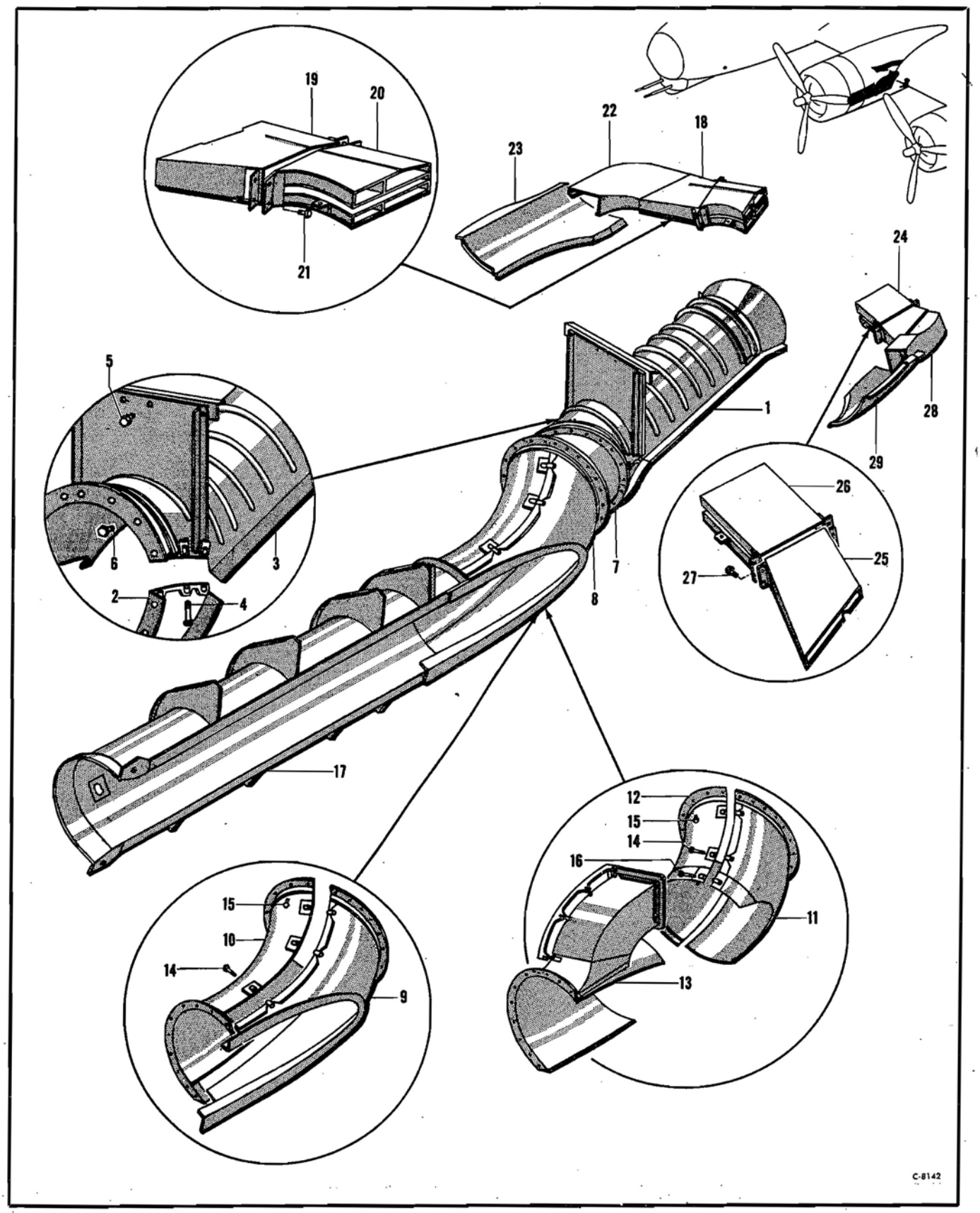

Figure 16— Inboard Exhaust Shrouds and Supercharger Cooling Ducts

PUBLISHED BY AVIALOGS.COM

WING

Inboard Exhaust Shrouds and Supercharger Cooling Ducts

Figure & Index No.	Part Number	1 2 3 4 5 6 7 Nomenclature	Usage Code	Units Per Assy.
		Inboard Exhaust Shrouds and Supercharger Cooling Ducts		
	85-4805	Installation—Inboard nacelle (see fig. 9)	All	NP
	85-4805-1	Installation—Inboard nacelle (see fig. 9)	All	NP
	55-6063-64	Installation—Exhaust shroud inboard nacelle (LH)	All	NP
	55-6063-65	Installation—Exhaust shroud inboard nacelle (RH)	All	NP
16-1	55-6063-404	Shroud Assembly (LH)	E	1
	55-6063-429	Shroud Assembly (LH)	XE	1
	55-6063-442	Shroud Assembly (LH)	WO	1
	55-6063-405	Shroud Assembly (RH)	E	1
	55-6063-430	Shroud Assembly (RH)	XE	1
	55-6063-443	Shroud Assembly (RH)	WO	1
2	15-6063-30	Shroud Assembly—Detachable (LH)	IC	1
	55-6063-440	Shroud Assembly—Detachable (LH)	WO	1
	15-6063-31	Shroud Assembly—Detachable (RH)	IC	1
	55-6063-441	Shroud Assembly—Detachable (RH)	WO	1
3	55-6063-402	Shroud Assembly—Weld (LH)	E	1
	55-6063-427	Shroud Assembly—Weld (RH)	ZE	1
	55-6063-403	Shroud Assembly—Weld (LH)	E	1
	55-6063-428	Shroud Assembly—Weld (RH)	ZE	1
4	AN3-15A	Bolt—Aircraft	All	6
5	AN3-4A	Bolt—Aircraft	All	4
6	AN3-3A	Bolt—Aircraft	All	14
	15-6045-62	Installation—Shroud inboard nacelle bulkhead LH	All	NP
	15-6045-63	Installation—Shroud inboard nacelle bulkhead RH	All	NP
7	15-6045-28	Shroud Assembly—LH	All	1
	15-6045-29	Shroud Assembly—RH	All	1
	85-4805-720	Nacelle Assembly—LH (see fig. 13)	All	Ref
	85-4805-721	Nacelle Assembly—RH (see fig. 13)	All	Ref
	65-6019	Installation—Shroud station 2D front spar (LH)	All	NP
	65-6019-1	Installation—Shroud station 2D front spar (RH)	All	NP
8	65-6019-518	Shroud Assembly (LH)	QB	1
	65-6019-545	Shroud Assembly (LH)	XM	1
	65-6019-519	Shroud Assembly (RH)	QB	1
	65-6019-546	Shroud Assembly (RH)	XM	1
9	65-6019-516	Shroud Assembly (LH)	QB	1
	65-6019-517	Shroud Assembly (RH)	QB	1
10	65-6019-515	Cover Assembly—Shroud (LH)	QB	1
	65-6019-514	Cover Assembly—Shroud (RH)	QB	1
11	65-6019-547	Shroud Assembly—Weld (LH)	XM	1
	65-6019-548	Shroud Assembly—Weld (RH)	XM	1
12	65-6019-557	Shroud Assembly—Weld (LH)	XM	1
	65-6019-558	Shroud Assembly—Weld (RH)	XM	1
13	15-16077	Shroud Assembly—Primary air (LH)	XM	1
	15-16077-1	Shroud Assembly—Primary air (RH)	XM	1
14	AN3-16A	Bolt—Aircraft	All	6
15	AN3-3A	Bolt—Aircraft	All	34
16	AN3-15A	Bolt—Aircraft	XM	2
	75-6002	Installation—Shroud inboard nacelle station 2 to 2D LH	All	NP
	75-6002-1	Installation—Shroud inboard nacelle station 2 to 2D RH	All	NP
17	75-6002-604	Shroud Assembly (LH)	QB	1
	75-6002-611	Shroud Assembly (LH)	XM	1
	75-6002-605	Shroud Assembly (RH)	QB	1
	75-6002-615	Shroud Assembly (RH)	XM	1
	55-5929-536	Installation—Lower fairing inboard nacelle (LH)	All	NP
	55-5929-537	Installation—Lower fairing inboard nacelle (RH)	All	NP
18	15-6535	Installation—Supercharger cooling duct (LH)	All	NP
	15-6535-1	Installation—Supercharger cooling duct (RH)	All	NP
19	15-6535-2	Duct Assembly—Spot weld (LH)	All	1
	15-6535-3	Duct Assembly—Spot weld (RH)	All	1
20	6-8532	Duct Assembly—Supercharger cooling (LH)	All	1
	6-8532-1	Duct Assembly—Supercharger cooling (RH)	All	1
21	AN3-3A	Bolt—Aircraft	All	6
22	55-5929-461	Scoop Assembly—Inboard (LH)	OB	1
	55-5929-646	Scoop (LH)	IL	1
	55-5929-462	Scoop Assembly—Inboard (RH)	OB	1
	55-5929-647	Scoop (RH)	IL	1
	9-3195	Installation—Supercharger cooler scoop extension (LH)	All	NP
	9-3195-1	Installation—Supercharger cooler scoop extension (RH)	All	NP
23	9-3195-39	Extension Assembly—Scoop (LH)	All	1
	9-3195-40	Extension Assembly—Scoop (RH)	All	1
24	15-6534	Installation—Supercharger cooling duct (LH)	All	NP
	15-6534-1	Installation—Supercharger cooling duct (RH)	All	NP
25	15-6534-2	Duct Assembly (LH)	All	1
	15-6534-3	Duct Assembly (RH)	All	1
26	6-8527	Duct Assembly—Supercharger cooler (LH)	All	1
	6-8527-13	Duct Assembly—Supercharger cooler (RH)	All	1
27	AN3-3A	Bolt—Aircraft	All	6
28	55-5929-473	Scoop Assembly—Weld outboard (LH)	OB	1
	55-5929-644	Scoop (LH)	IL	1
	55-5929-474	Scoop Assembly—Weld outboard (RH)	OB	1
	55-5929-645	Scoop (RH)	IL	1
	6-8526	Installation—Supercharger cooler scoop extension (LH)	All	NP
	6-8526-1	Installation—Supercharger cooler scoop extension (RH)	All	NP
29	6-8526-30	Extension Assembly—Scoop (LH)	All	1
	6-8526-31	Extension Assembly—Scoop (RH)	All	1

PUBLISHED BY AVIALOGS.COM

WING

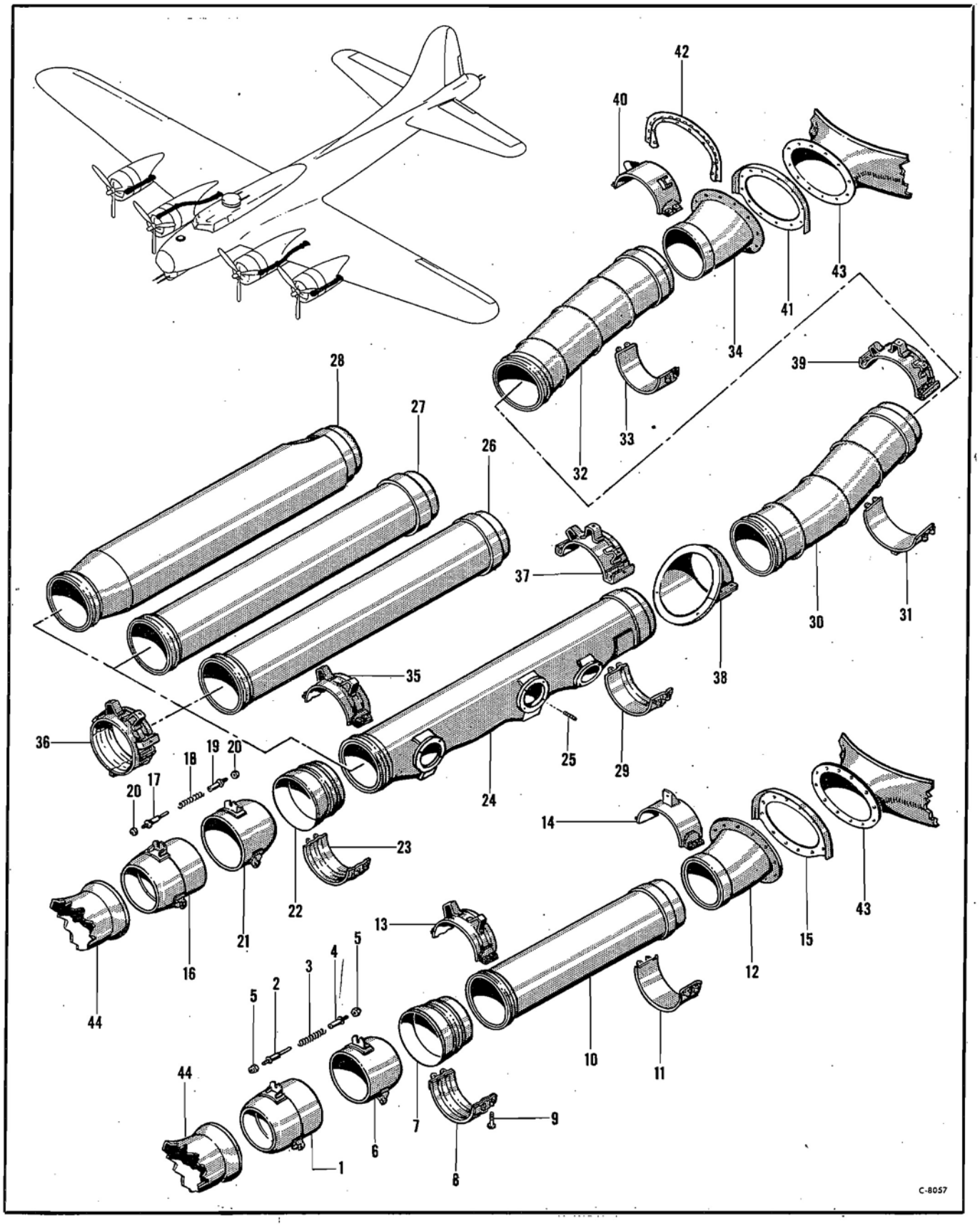

Figure 17—Exhaust Collector Tailpipes

PUBLISHED BY AVIALOGS.COM

WING

Exhaust Collector Tailpipes

Figure & Index No.	Part Number	1 2 3 4 5 6 7 Nomenclature	Usage Code	Units Per Assy.
		Exhaust Collector Tailpipes		
	65-7350	Installation—Power plant	All	NP
	65-6690	Tailpipe Assembly—LH outboard	E	1
	65-6690-1	Tailpipe Assembly—RH outboard	E	1
	65-6690-506	Tailpipe Assembly—Outboard	ZE	2
17-1	3-12485	Ball Assembly—Flexible joint	All	1
2	1-16606	Stud—Spring	All	3
3	1-16604	Spring—Compression	All	3
4	1-16605	Stud—Spring support	All	3
5	AN310-4	Nut—Aircraft castle	All	6
6	3-12487	Ball Assembly—Flexible joint	All	1
7	3-12486	Socket Assembly—Flexible joint	All	1
8	3-12229-4	Clamp Assembly—Lower half	All	1
9	AN4H12A	Bolt—Aircraft	All	8
10	55-6690-400	Tube Assembly—Weld	All	1
11	3-12291	Clamp Assembly—Lower half	All	1
12	65-6690-500	Transition Assembly (LH)	E	1
	65-6690-501	Transition Assembly (RH)	E	1
	65-6690-507	Transition Assembly	ZE	1
	7-1370	Installation—Clamp outboard station 2	All	NP
13	6-8460	Clamp Assembly—Upper half	All	1
	7-1371	Installation—Clamp outboard station 2C (LH)	All	NP
	7-1371-1	Installation—Clamp outboard station 2C (RH)	All	NP
14	3-12292	Clamp Assembly—Upper half	All	1
	9-3186	Installation—Outboard shroud seal	All	NP
15	9-3186-1	Gasket Assembly	All	1
	95-6525	Tailpipe Assembly—Exhaust inboard LH	E	1
	95-6525-811	Tailpipe Assembly—Exhaust inboard LH	SE	1
	95-6525-820	Tailpipe Assembly—Exhaust inboard LH	TM	1
	95-6525-819	Tailpipe Assembly—Exhaust inboard LH	FP	1
	85-6525	Tailpipe Assembly—Exhaust inboard RH	E	1
	85-6525-712	Tailpipe Assembly—Exhaust inboard RH	SE	1
	85-6525-722	Tailpipe Assembly—Exhaust inboard RH	TM	1
	85-6525-720	Tailpipe Assembly—Exhaust inboard RH	FP	1
16	3-12485	Ball Assembly—Flexible joint	All	1
17	1-16606	Stud—Spring	All	3
18	1-16604	Spring—Compression	All	3
19	1-16605	Stud—Spring	All	3
20	AN310-4	Nut—Aircraft castle	All	6
21	3-12487	Ball Assembly—Flexible joint	All	1
22	3-12486	Socket Assembly—Flexible joint	All	1
23	3-12229	Clamp Assembly—Lower half	QB	1
24	75-6525-16	Section Assembly (LH)	QB	1
25	1-21053	Stud—Heater	All	12
26	85-6525-721	Section Assembly	TM	1
27	65-6525-501	Section Assembly (RH)	QB	1
28	15-11383	Exchanger Assembly—Exhaust heat	FP	1
29	3-12295	Clamp Assembly—Lower half	All	1
30	75-6525-601	Section Assembly—Tailpipe (LH)	QB	1
	95-6525-814	Section Assembly—Tailpipe (LH)	XM	1
	65-6525-502	Section Assembly—Tailpipe (RH)	QB	1
	85-6525-716	Section Assembly—Tailpipe (RH)	XM	1
31	3-12312	Clamp Assembly—Lower half	All	1
32	75-6525-602	Section Assembly—Tailpipe (LH)	All	1
	65-6525-503	Section Assembly—Tailpipe (RH)	All	1
33	3-12291	Clamp Assembly—Lower half	All	1
34	95-6525-805	Transition Assembly (LH)	E	1
	95-6525-812	Section Assembly—Transition (LH)	ZE	1
	85-6525-705	Section Assembly—Transition (RH)	E	1
	85-6525-713	Section Assembly—Transition (RH)	ZE	1
	46-8649	Installation—Inboard clamp station 2 LH	QB	NP
	46-8649-1	Installation—Inboard clamp station 2 RH	QB	NP
35	6-8460-1	Clamp Assembly—Upper half station 2	All	1
	6-16382	Installation—Inboard nacelle clamp (LH)	XM	NP
	6-16382-1	Installation—Inboard nacelle clamp (RH)	XM	NP
36	9-6730-1	Clamp Assembly—Exhaust stack	All	1
	46-8648	Installation—Inboard clamp station 2D (LH)	All	NP
	46-8648-1	Installation—Inboard clamp station 2D (RH)	All	NP
37	6-8476	Clamp Assembly—Upper half	All	1
	9-7577	Installation—Inboard shroud seal (LH)	XM	NP
	9-7577-1	Installation—Inboard shroud seal (RH)	XM	NP
38	2-2080	Clamp Assembly—Airseal (LH)	All	1
	2-2080-1	Clamp Assembly—Airseal (RH)	All	1
	7-1373	Installation—Inboard clamp station 3 (LH)	All	NP
	7-1373-1	Installation—Inboard clamp station 3 (RH)	All	NP
39	6-8476	Clamp Assembly—Upper half	All	1
	7-1372	Installation—Inboard clamp station 3C (LH)	All	NP
	7-1372-1	Installation—Inboard clamp station 3C (RH)	All	NP
40	3-12313	Clamp Assembly—Upper half	All	1
41	9-3186-1	Gasket Assembly—Shroud	MC	2
42	6-20711	Seal Assembly—Shroud	OP	4
43	15-9796	Installation—Supercharger (see fig. 33 & 34)	All	NP
44		Manifold Assemblies—Exhaust (see fig. 178)		

PUBLISHED BY AVIALOGS.COM

WING

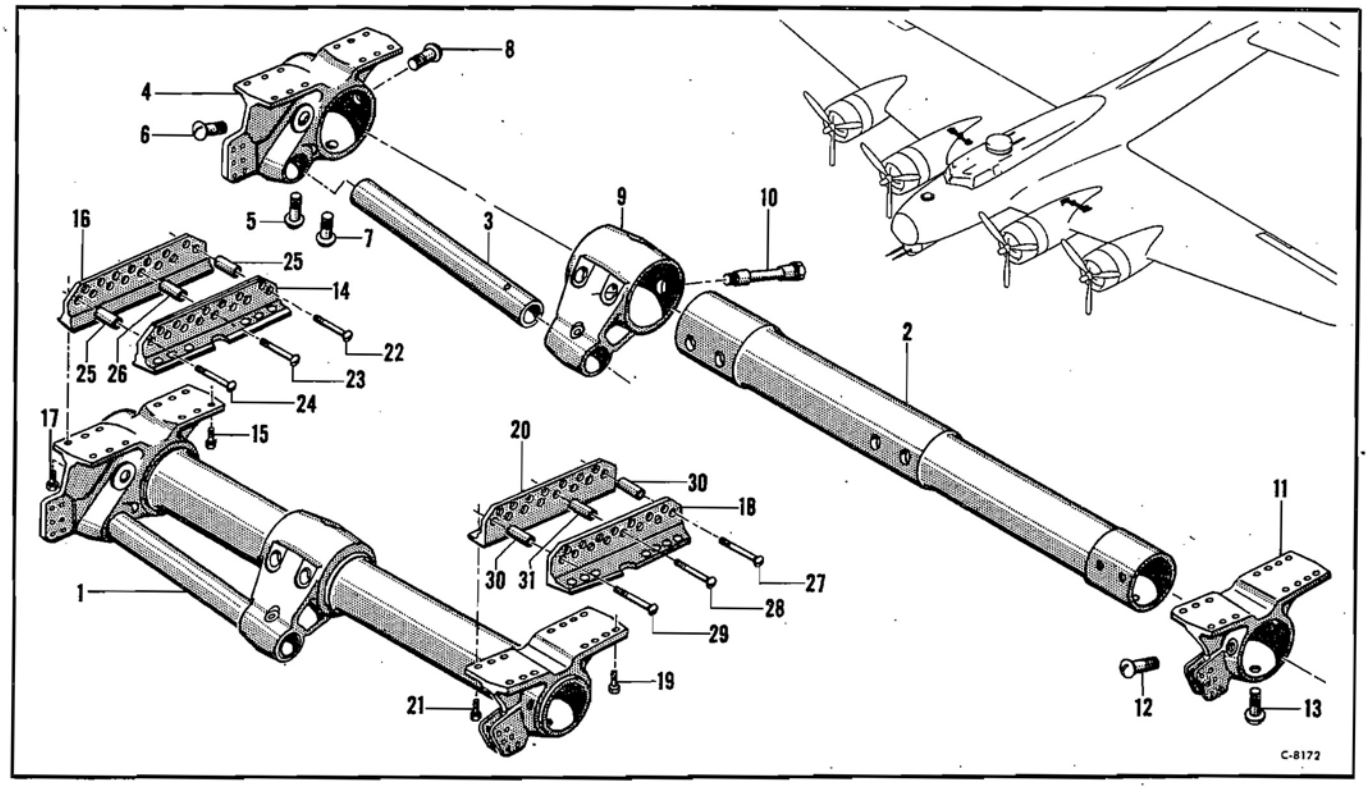

Figure 18—Landing Gear Support

Landing Gear Support

Figure & Index No.	Part Number	1 2 3 4 5 6 7 Nomenclature	Usage Code	Units Per Assy.
	55-6249	Installation—Landing gear support (LH) (see fig. 11)	All	NP
	55-6249-1	Installation—Landing gear support (RH) (see fig. 11)	All	NP
18-1	55-6249-400	Support Assembly—Landing gear (LH)	All	1
	55-6249-401	Support Assembly—Landing gear (RH)	All	1
2	4-805	Tube—Landing gear support	All	1
3	41-2789	Trunnion—Landing gear	All	1
4	9-3048-2	Fitting—Landing gear attaching station 4 (LH)	All	1
	9-3048-3	Fitting—Landing gear attaching station 4 (RH)	All	1
5	AN36-25	Bolt—Clevis	All	1
6	AN36-27	Bolt—Clevis	All	2
7	AN36-28	Bolt—Clevis	All	1
8	1-17461	Bolt	All	2
	21-9588-11	Washer—Ball seat	All	6
9	7-1345	Fitting—Landing gear support (LH)	All	1
	7-1345-1	Fitting—Landing gear support (RH)	All	1
10	41-9404-1	Bolt	All	2
	AN960-1416	Washer—Plain	All	2
	AN320-14	Nut—Aircraft shear	All	2
11	6-8129-2	Fitting—Landing gear attaching station 6 (LH)	All	1
	6-8129-3	Fitting—Landing gear attaching station 6 (RH)	All	1
12	AN28-16	Bolt—Clevis	All	4
13	AN30-19	Bolt—Clevis	All	1
	21-9588-8	Washer—Ball seat	All	4
	21-9588-4	Washer—Ball seat	All	1
14	46-6512-400	Angle—Landing gear attaching station 4 outboard (LH)	All	1
	46-6512-401	Angle—Landing gear attaching station 4 outboard (RH)	All	1
15	AN6C11	Bolt—Aircraft	All	6
16	46-6512-402	Angle—Landing gear attaching station 4 inboard (LH)	All	1
	46-6512-403	Angle—Landing gear attaching station 4 inboard (RH)	All	1
17	AN6C10	Bolt—Aircraft	All	6
18	46-6513-402	Angle—Landing gear attaching station 6 outboard (LH)	All	1
	46-6513-403	Angle—Landing gear attaching station 6 outboard (RH)	All	1
19	AN6C11	Bolt—Aircraft	All	7
20	46-6513-400	Angle—Landing gear attaching station 6 inboard (LH)	All	1
	46-6513-401	Angle—Landing gear attaching station 6 inboard (RH)	All	1
21	AN7C10	Bolt—Aircraft	All	7
22	NAS57-34-5	Bolt—Close tolerance	All	2
23	NAS56-37	Bolt—Close tolerance	All	11
24	NAS57-37-5	Bolt—Close tolerance	All	2
25	BAC1607-105	Spacer	All	4
26	BAC1606-105	Spacer	All	11
27	NAS57-32-5	Bolt—Close tolerance	All	2
28	NAS56-32	Bolt—Close tolerance	All	11
29	NAS57-30-5	Bolt—Close tolerance	All	2
30	BAC1607-95	Spacer	All	4
31	BAC1606-95	Spacer	All	11

PUBLISHED BY AVIALOGS.COM

WING

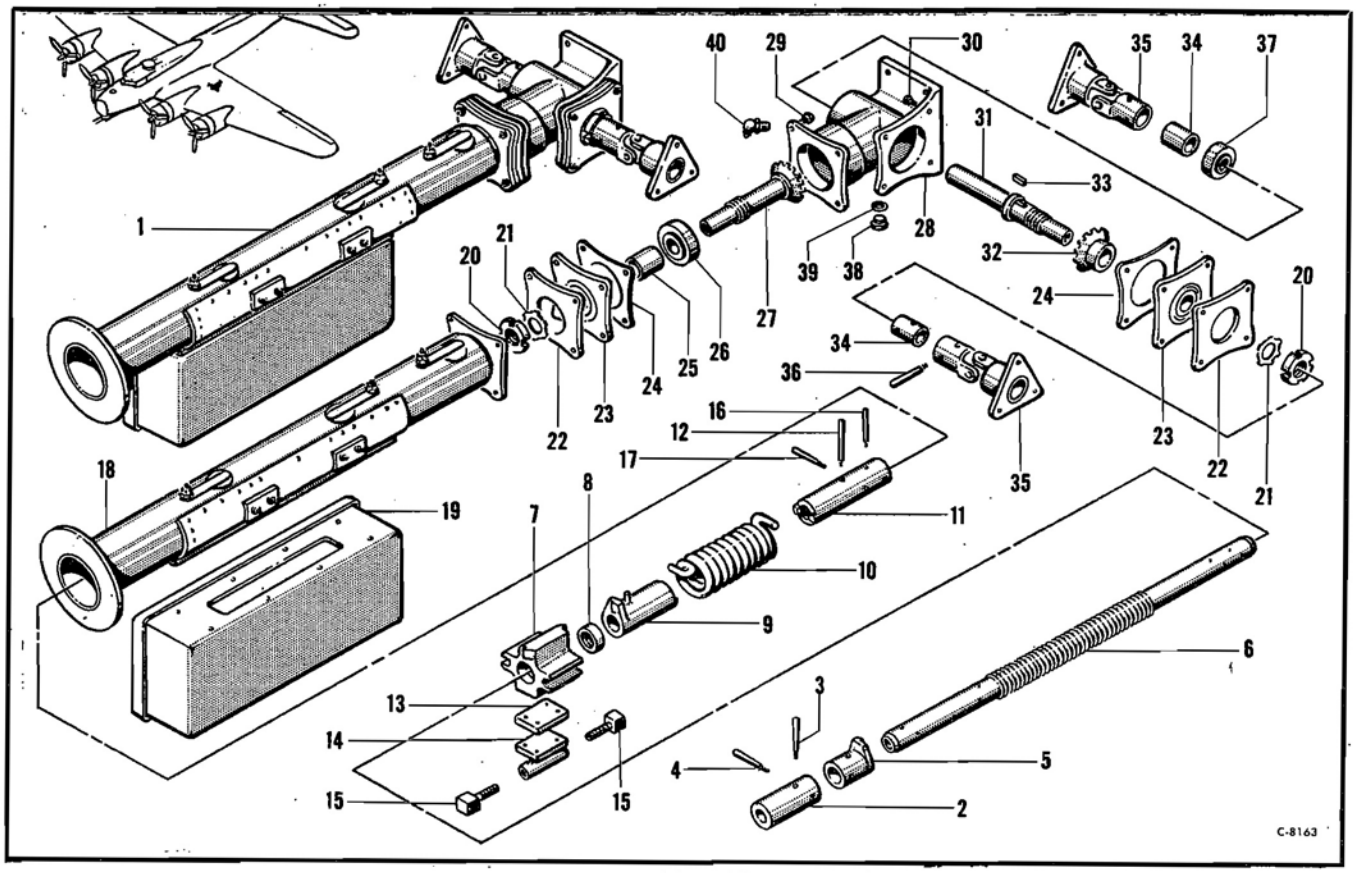

Figure 19—Unit Assembly—Flap Controls Motor

Unit Assembly—Flap Controls Motor

Figure & Index No.	*Part Number*	*1 2 3 4 5 6 7* *Nomenclature*	*Usage Code*	*Units Per Assy.*
19-1	49-2631	Unit Assembly—Flap controls motor (see fig. 20)	All	Ref
	46-6905	Shaft Assembly—Flap motor	All	1
2	51-568	Coupling—Flap motor	All	1
3	AN386-1-9	Pin—Threaded taper	All	2
4	AN386-2-9	Pin—Threaded taper	All	3
5	51-569	Stop—Flap motor	All	1
6	3-8752-1	Screw—Flap motor stop	All	1
7	3-11733	Nut—Flap motor stop	All	1
8	46-6905-1	Tube	All	1
9	41-4600	Stop Assembly—Flap motor	All	1
10	41-5613	Spring—Torsion	All	1
11	41-4498	Stop—Flap motor	All	1
12	AN386-1-12	Pin—Threaded taper	All	1
13	49-2631-4	Shim	CB	1
14	51-482	Nut—Limit switch	CB	1
	1-30200	Nut—Limit switch	CL	1
15	51-211	Striker—Limit switch	All	2
16	AN386-1-9	Pin—Threaded taper	All	1
17	AN386-2-9	Pin—Threaded taper	All	1
18	49-2976	Tube Assembly—Flap motor	All	1
19	6-8325	Shield—Flap limit switch	All	1
20	41-4601	Nut—Flap control	All	2
21	41-4602-1	Washer—Flap control	All	2
22	41-2801	Plate—Flap control	All	2
23	41-4483	Cap Assembly—Flap control	All	2
24	41-1439	Shim—Laminated	All	2
25	1-9034	Spacer—Flap control	All	1
26	AN201K12A	Bearing—Ball	All	1
27	41-1435	Gear—Flap control	All	1
28	46-6603	Housing—Flap control	All	1
29	AN3-10	Bolt—Aircraft	All	4
30	AN3-7	Bolt—Aircraft	All	4
31	41-1436-2	Shaft—Flap control	All	1
32	41-1434-1	Gear—Flap control	All	1
33	BAC1002-8	Key—5-32 square	All	1
34	1-27901	Sleeve—Flap control	All	2
35	3-19275	Joint Assembly—Flap control	All	2
	BAC1851-16	Joint—Universal	GB	1
	44B6540	Joint—Universal	PL	1
36	AN386-1-8	Pin—Threaded taper	All	4
37	AN201K10A	Bearing—Ball	All	1
38	905-6	Plug	All	1
39	AN900-6	Gasket—Annular copper	All	1
40	AN286-3	Fitting—Lubricator	All	1

PUBLISHED BY AVIALOGS.COM

WING

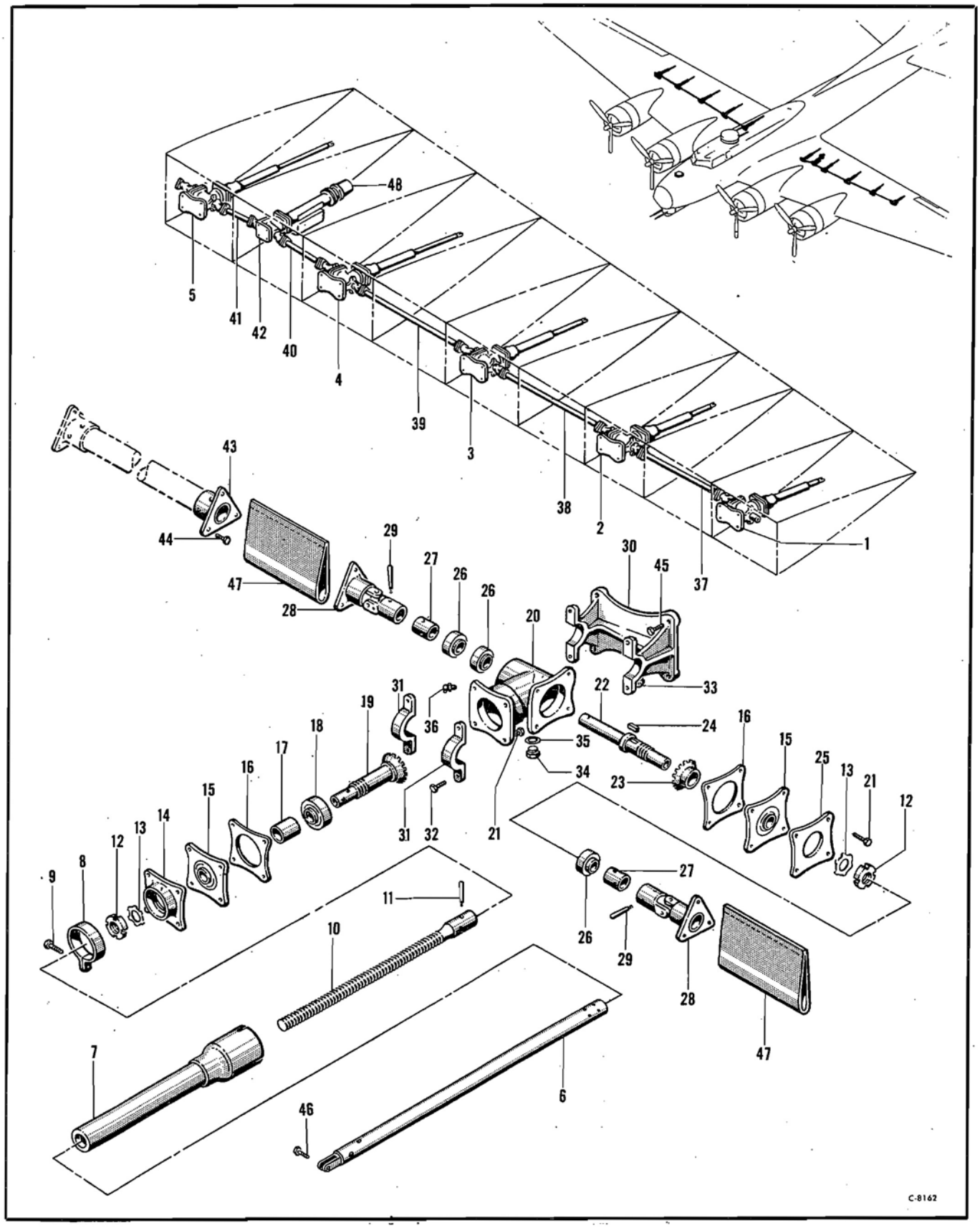

Figure 20—Wing, Flap Control

PUBLISHED BY AVIALOGS.COM

WING

Wing Flap Control

Figure & Index No.	Part Number	1 2 3 4 5 6 7 Nomenclature	Usage Code	Units Per Assy.
		Wing Flap Control		
	55-5442	Installation—Wing flap control (see fig. 12)	All	NP
	55-5442-1	Installation—Wing flap control (see fig. 12)	All	NP
20-1	7-1365	Control Assembly—Wing flap (LH)	All	1
	7-1365-1	Control Assembly—Wing flap (RH)	All	1
2	7-1365-2	Control Assembly—Wing flap (LH)	All	1
	7-1365-3	Control Assembly—Wing flap (RH)	All	1
3	7-1365-4	Control Assembly—Wing flap (LH)	All	1
	7-1365-5	Control Assembly—Wing flap (RH)	All	1
4	7-1365-6	Control Assembly—Wing flap (LH)	All	1
	7-1365-7	Control Assembly—Wing flap (RH)	All	1
5	7-1365-8	Control Assembly—Wing flap (LH)	All	1
	7-1365-9	Control Assembly—Wing flap (RH)	All	1
	3-12087	Rod Assembly—Flap control (used on 7-1365 and 7-1365-1)	All	1
	3-12087-2	Rod Assembly—Flap control (used on 7-1365-2 and 7-1365-3)	All	1
	3-12087-4	Rod Assembly—Flap control (used on 7-1365-4 and 7-1365-5)	All	1
	3-12087-6	Rod Assembly—Flap control (used on 7-1365-6 and 7-1365-7)	All	1
6	3-12087-8	Rod Assembly—Flap control (used on 7-1365-8 and 7-1365-9)	All	1
	41-4633	Terminal—Flap control rod	All	1
	AN23-27A	Bolt—Clevis	All	2
	AN365-1032	Nut—Self-locking	All	2
7	41-4638	Sleeve Assembly—Flap control	All	1
8	AN741-18P	Clamp—Tube	All	1
9	AN3-12A	Bolt—Aircraft	All	1
	AN365-1032	Nut—Self-locking	All	13
10	3-15122	Screw—Flap control	All	1
11	AN386-1-7	Pin—Threaded taper	All	4
	AN975-3	Washer—Taper pin	All	6
12	41-4601	Nut—Flap control	All	2
13	41-4602-1	Washer—Flap control	All	2
14	41-4484	Flange—Flap control	All	1
15	41-4483	Cap Assembly—Flap control	All	2
	AN201K12A	Bearing—Ball	All	1
16	41-1439	Shim—Laminated	All	2
17	1-19034	Spacer—Flap control	All	1
18	AN201K12A	Bearing—Ball	All	1
19	41-1435	Gear—Flap control	All	1
20	43-8756	Housing—Flap control	All	1
21	AN3-7	Bolt—Aircraft	All	8
	AN310-3	Nut—Aircraft castle	All	2
22	41-1436	Shaft—Flap control	All	1
23	41-1434	Gear—Flap control	All	1
24	BAC1002-8	Key—5-32 square	All	1
25	41-2801	Plate—Flap control	All	1
26	AN201K10A	Bearing—Ball	All	3
27	1-27901	Sleeve—Flap control	All	2
28	3-19275	Joint Assembly—Flap controls	All	2
	BAC1851-16	Joint—Universal	GB	1
	44B6540	Joint—Universal	PL	1
29	AN386-1-8	Pin—Threaded taper	All	4
	43-8754	Bracket Assembly—Flap control	All	1
30	43-8754-1	Base—Bracket	All	1
31	43-8754-2	Cap—Bracket	All	2
32	AN3-7A	Bolt—Aircraft	All	4
33	AN365-1032	Nut—Self-locking	All	4
34	905-6	Plug—Hex	All	1
35	AN900-6	Gasket—Annular copper	All	1
36	AN286-3	Fitting—Lubricator	All	1
37	41-5035-53-13	Tube Assembly—Flap torque (LH)	All	1
	41-5035-53-17	Tube Assembly—Flap torque (RH)	All	1
38	41-5035-51-1	Tube Assembly—Flap torque (LH)	All	1
	41-5035-50-31	Tube Assembly—Flap torque (RH)	All	1
39	41-5035-61-16	Tube Assembly—Flap torque (LH)	All	1
	41-5035-61-19	Tube Assembly—Flap torque (RH)	All	1
40	41-5035-55-25	Tube Assembly—Flap torque (LH)	All	1
	41-5035-24-8	Tube Assembly—Flap torque (RH)	All	1
41	41-5035-21-15	Tube Assembly—Flap torque (LH)	All	1
42	49-2631	Unit Assembly—Flap controls motor (LH) (see fig. 19)	All	1
43	41-4220	Coupling—Shaft	All	5
44	AN3-5A	Bolt—Aircraft	All	30
45	AN3-6A	Bolt—Aircraft	All	24
	AN960D10	Washer—Plain	All	60
	AN365-1032	Nut—Self-locking	All	54
46	41-1395-21	Bolt	All	5
	AN320-4	Nut—Aircraft shear	All	5
	41-5918	Installation—Universal grease boot	GB	NP
47	41-5918-1	Boot	All	1
48	786-1	Motor Assembly—Wing flap (Eclipse) (see T.O. 03-55CC-26) (see fig. 44)	All	Ref

PUBLISHED BY AVIALOGS.COM

WING

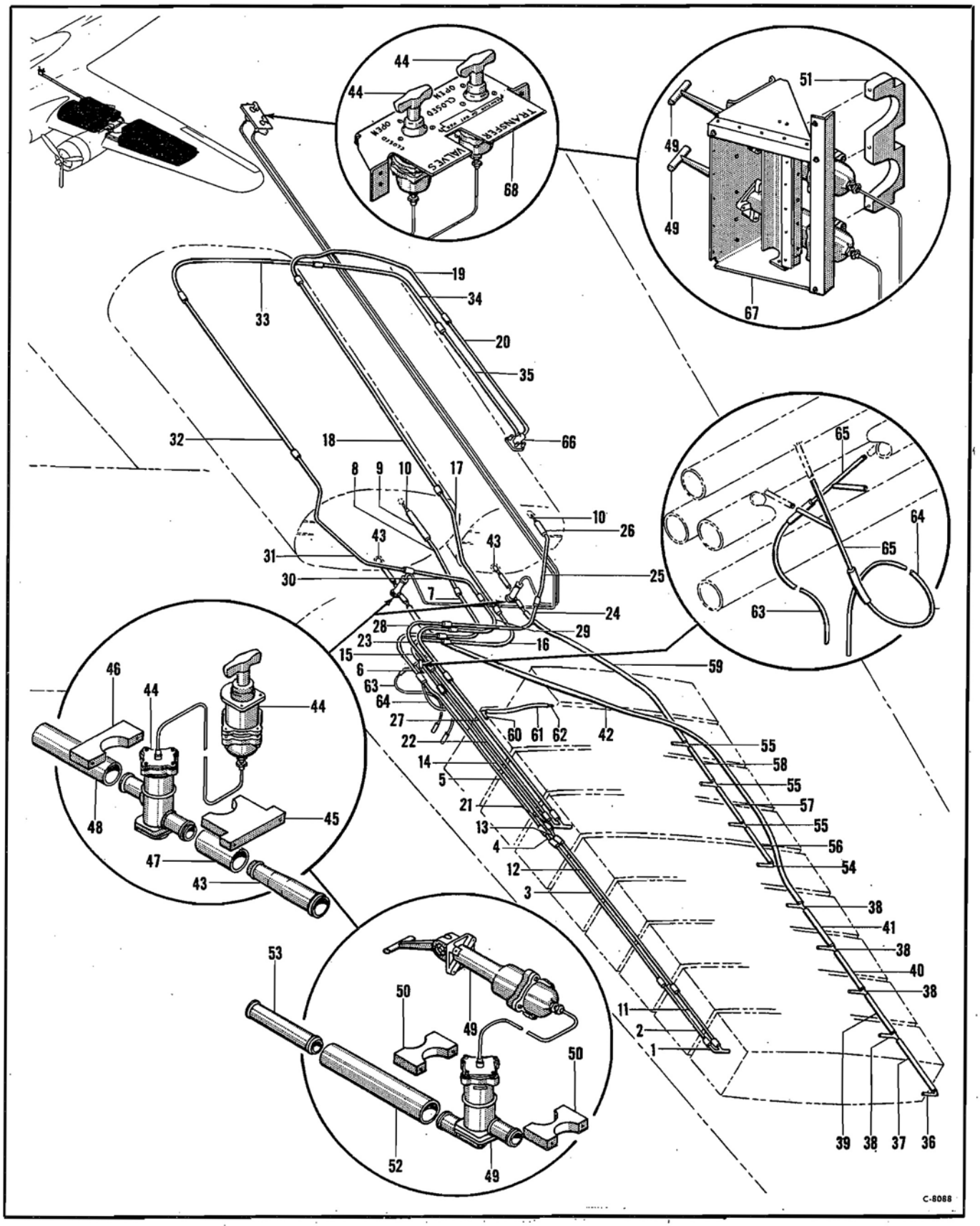

Figure 21. Outboard Fuel Tubing

PUBLISHED BY AVIALOGS.COM

WING

Outboard Fuel Tubing

Figure & Index No.	Part Number	1 2 3 4 5 6 7 Nomenclature	Usage Code	Units Per Assy.
		Outboard Fuel Tubing		
	15-10407	Installation—Outboard fuel tubing (LH) (see fig. 22)	SC	NP
	15-10407-1	Installation—Outboard fuel tubing (RH) (see fig. 22)	SC	NP
21-1	3-22243	Elbow Assembly—Fuel vent	P	1
	3-25167	Elbow Assembly—Fuel vent	XF	1
2	15-10407-73	Tube Assembly (fuel vent)	IC	1
3	15-10407-74	Tube Assembly (fuel vent)	All	1
4	15-10407-81	Tube Assembly (fuel vent)	All	1
5	15-10407-75	Tube Assembly (fuel vent)	SC	1
6	3-20740	Elbow Assembly—LH (fuel vent)	SC	1
	3-20740-1	Elbow Assembly—RH (fuel vent)	SC	1
7	15-10407-76	Tube Assembly (fuel vent)	SC	1
8	15-10407-77	Tube Assembly (fuel vent)	SC	1
9	AN878-16-44	Hose—Synthetic	ZA	1
	AN878-16-54	Hose—Synthetic	UK	1
10	1-29182	Tube—Swaged	E	2
	3-24632	Tube—Swaged	FE	2
11	15-10407-3	Tube Assembly (fuel vent)	SC	1
12	15-10407-50	Tube Assembly (fuel vent)	SC	1
13	15-10407-11	Tube Assembly (fuel vent)	SC	1
14	15-10407-4	Tube Assembly (fuel vent)	SC	1
15	3-20236	Tube Assembly—LH (fuel vent)	SC	1
	3-20236-1	Tube Assembly—RH (fuel vent)	SC	1
16	15-10407-12	Tube Assembly (fuel vent)	SC	1
17	15-10407-13	Tube Assembly (fuel vent)	SC	1
18	15-10407-14	Tube Assembly (fuel vent)	SC	1
19	15-10407-15	Tube Assembly (fuel vent LH)	SC	1
	15-10407-16	Tube Assembly (fuel vent RH)	SC	1
20	15-10407-54	Tube Assembly (fuel vent LH)	SC	1
	15-10407-55	Tube Assembly (fuel vent RH)	SC	1
21	3-22244	Elbow Assembly—Fuel vent	P	1
	3-25166	Elbow Assembly—Fuel vent	XF	1
22	15-10407-78	Tube Assembly (fuel vent)	SC	1
23	3-22289	Tube Assembly—LH (fuel vent)	SC	1
	3-22289-1	Tube Assembly—RH (fuel vent)	SC	1
24	15-10407-79	Tube Assembly (fuel vent LH)	SC	1
	15-10407-83	Tube Assembly (fuel vent RH)	SC	1
25	15-10407-80	Tube Assembly (fuel vent)	SC	1
26	AN878-16-26	Hose—Synthetic	ZA	1
	AN878-16-44	Hose—Synthetic	UK	1
27	15-10407-4	Tube Assembly (fuel vent)	SC	1
28	3-20235	Tube Assembly—LH (fuel vent)	SC	1
	3-20235-1	Tube Assembly—RH (fuel vent)	SC	1
29	15-10407-5	Tube Assembly (fuel vent)	SC	1
30	15-10407-46	Tube Assembly (fuel vent)	SC	1
31	15-10407-6	Tube Assembly (fuel vent LH)	SC	1
	15-10407-45	Tube Assembly (fuel vent RH)	SC	1
32	15-10407-7	Tube Assembly (fuel vent)	SC	1
33	15-10407-8	Tube Assembly (fuel vent LH)	SC	1
	15-10407-9	Tube Assembly (fuel vent RH)	SC	1
34	15-10407-34	Tube Assembly (fuel vent LH)	SC	1
	15-10407-35	Tube Assembly (fuel vent RH)	SC	1
35	15-10407-52	Tube Assembly (fuel vent LH)	SC	1
	15-10407-53	Tube Assembly (fuel vent RH)	SC	1
36	1-27733	Tube Assembly—Fuel tubing	P	1
	3-25169	Tube Assembly—Fuel tubing	XF	1
37	15-10407-18	Hose—Fuel feed	All	1
38	3-19593	Tee Assembly—Fuel feed	P	4
	3-25168	Tee Assembly—Fuel feed	XF	4
39	15-10407-19	Hose (fuel feed)	All	1
40	15-10407-20	Hose (fuel feed)	All	1
41	15-10407-21	Hose (fuel feed)	All	1
42	15-10407-22	Hose (fuel feed)	LC	1
43	1-28972	Tube—Swaged	D	4
44	A855KX	Valve Assembly—Transfer control (Denison) GFE	D	2
	A855NX	Valve Assembly—Transfer control (E-5) (Denison) GFE	D	2
45	1-128969	Clamp—Shut off valve	D	2
46	1-128966	Clamp—Shut off valve	D	2
47	15-10407-62	Hose (fuel feed)	D	2
48	15-10407-63	Hose (fuel feed)	EE	2
49	A855RX	Valve Assembly—Transfer control (D-5) (Denison) GFE	NJ	2
50	3-23438	Clamp—Fuel valve	DE	4
51	3-27147	Clamp—Valve bracket	PJ	1
52	15-10407-94	Hose (fuel feed)	FE	2
	15-10407-96	Hose (fuel feed)	TK	2
53	3-24429	Sleeve—Tank connector	FE	2
54	1-27733-2	Elbow—Fuel feed	P	1
	3-25169	Elbow—Fuel feed	XF	1
55	3-19593	Tee Assembly—Fuel feed	SC	3
56	15-10407-23	Tube Assembly (fuel feed)	All	1
57	15-10407-24	Tube Assembly (fuel feed)	All	1
58	15-10407-25	Tube Assembly (fuel feed)	All	1
59	15-10407-26	Tube Assembly (fuel feed)	LC	1
60	3-20742	Elbow Assembly—Tube	P	1
	3-25171	Elbow Assembly—Tube	XF	1
61	15-10407-27	Hose Assembly	SC	1
62	1-27216	Sleeve—Tube	P	1
	3-25170	Sleeve—Tube	XF	1
63	15-10407-87	Tube Assembly (fuel vent drain LH)	ZD	1
	15-10407-88	Tube Assembly (fuel vent drain RH)	ZD	1
64	15-10407-89	Tube Assembly (fuel vent drain LH)	ZD	1
	15-10407-90	Tube Assembly (fuel vent drain RH)	ZD	1
65	3-22245	Tube Assembly—Fuel vent	SC	2
66	6-12874-6	Flange Assembly—Tank vents (see fig. 12)	All	Ref
	15-10390	Installation—Outboard wing tank (see fig. 24)	All	NP
	15-10400	Installation—Inboard wing tank (see fig. 24)	All	NP
	15-10408	Installation—Wing fuel tank (see fig. 24)	All	NP
67	9-7996	Installation—D-5 fuel valve bracket (see fig. 69)	PJ	NP
68	6-14134	Installation—Fuel valve bracket (LH) (see fig. 69)	QA	NP
	6-14134-1	Installation—Fuel valve bracket (RH) (see fig. 69)	QA	NP

PUBLISHED BY AVIALOGS.COM

WING

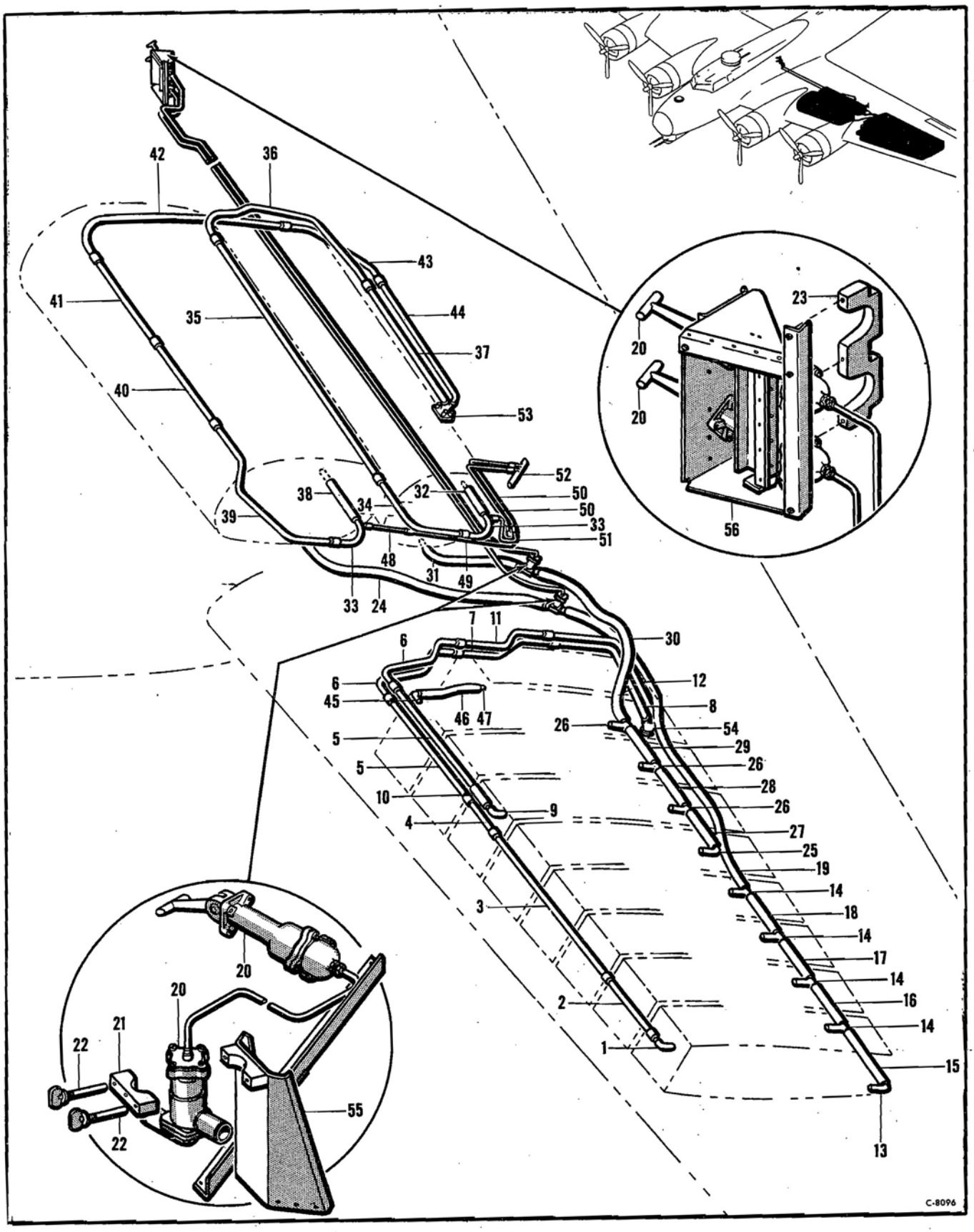

PUBLISHED BY AVIALOGS.COM

WING

Outboard Fuel Tubing

Figure & Index No.	Part Number	1 2 3 4 5 6 7 Nomenclature	Usage Code	Units Per Assy.
		Outboard Fuel Tubing		
	15-10407	Installation—Outboard fuel tubing (LH) (see fig. 21)	VP	NP
	15-10407-1	Installation—Outboard fuel tubing (RH) (see fig. 21)	VP	NP
22-1	3-25221-7	Elbow Assembly—Fuel vent	VP	1
2	15-10407-95	Tube Assembly (fuel vent)	VP	1
3	15-10407-74	Tube Assembly (fuel vent)	VP	1
4	15-10407-81	Tube Assembly (fuel vent)	VP	1
5	15-10407-118	Tube Assembly (fuel vent)	VP	2
6	15-10407-119	Tube Assembly (fuel vent)	VP	2
7	15-10407-123	Tube Assembly (fuel vent)	VP	1
8	15-10407-128	Tube Assembly (fuel vent LH)	VP	1
	15-10407-127	Tube Assembly (fuel vent RH)	VP	1
9	3-25166-7	Elbow Assembly—Fuel vent	VP	1
10	AN878-16-26	Hose—Synthetic	VP	1
11	15-10407-121	Tube Assembly—Fuel vent	VP	1
12	15-10407-126	Tube Assembly (fuel vent LH)	VP	1
	15-10407-125	Tube Assembly (fuel vent RH)	VP	1
13	3-25169-1	Tube Assembly—Fuel tubing	VP	1
14	3-25168	Tee Assembly—Fuel tubing	VP	4
15	15-10407-18	Hose (fuel feed)	All	1
16	15-10407-19	Hose (fuel feed)	All	1
17	15-10407-20	Hose (fuel feed)	All	1
18	15-10407-21	Hose (fuel feed)	All	1
19	15-10407-157	Hose (fuel feed)	MP	1
20	A855RX	Valve Assembly—Transfer control (D-5) (Denison) GFE (see fig. 105)	MP	2
21	3-29469	Clamp—Fuel valve	MP	2
22	3-20745-48	Screw Assembly—Clamp	MP	4
23	3-27147	Clamp—Valve bracket	VP	1
24	15-10407-159	Hose (fuel feed)	MP	1
25	3-25169	Tube Assembly—Fuel tubing	VP	1
26	3-19593	Tee Assembly—Fuel tubing	All	3
27	15-10407-23	Hose (fuel feed)	All	1
28	15-10407-24	Hose (fuel feed)	All	1
29	15-10407-25	Hose (fuel feed)	All	1
30	15-10407-156	Hose (fuel feed)	MP	1
31	15-10407-158	Hose (fuel feed)	MP	1
32	AN878-16-44	Hose—Synthetic	VP	1
33	3-28707	Elbow Assembly—Fuel feed	VP	2
34	15-10407-140	Tube Assembly (fuel feed)	VP	1
35	15-10407-141	Tube Assembly (fuel feed)	VP	1
36	15-10407-142	Tube Assembly (fuel feed LH)	VP	1
	15-10407-143	Tube Assembly (fuel feed RH)	VP	1
37	15-10407-144	Tube Assembly (fuel feed LH)	VP	1
	15-10407-145	Tube Assembly (fuel feed RH)	VP	1
38	AN878-16-54	Hose—Synthetic	VP	1
39	15-10407-130	Tube Assembly (fuel feed LH)	VP	1
	15-10407-131	Tube Assembly (fuel feed RH)	VP	1
40	15-10407-132	Tube Assembly (fuel feed)	VP	1
41	15-10407-133	Tube Assembly (fuel feed)	VP	1
42	15-10407-134	Tube Assembly (fuel feed LH)	VP	1
	15-10407-135	Tube Assembly (fuel feed RH)	VP	1
43	15-10407-136	Tube Assembly (fuel feed LH)	VP	1
	15-10407-137	Tube Assembly (fuel feed RH)	VP	1
44	15-10407-138	Tube Assembly (fuel feed LH)	VP	1
	15-10407-139	Tube Assembly (fuel feed RH)	VP	1
45	3-25171	Elbow Assembly—Tube	VP	1
46	15-10407-27	Hose (fuel feed)	VP	1
47	3-25170	Sleeve—Tube	VP	1
48	15-10407-152	Tube Assembly (fuel vent drain LH)	VP	1
	15-10407-153	Tube Assembly (fuel vent drain RH)	VP	1
49	15-10407-151	Tube Assembly (fuel vent drain)	VP	1
50	15-10407-146	Tube Assembly (fuel vent drain LH)	VP	2
	15-10407-147	Tube Assembly (fuel vent drain RH)	VP	2
51	15-10407-149	Tube Assembly (fuel vent drain LH)	VP	1
	15-10407-150	Tube Assembly (fuel vent drain RH)	VP	1
52	3-28710	Tube Assembly—Siphon breaker	VP	1
53	6-12874-6	Flange Assembly—Tank vents (see fig. 12)	All	Ref
	9-5598	Installation—Fuel connection door (LH) (see fig. 12)	All	NP
	9-5598-1	Installation—Fuel connection door (RH) (see fig. 12)	All	NP
54	6-18950	Flange Assembly—Tank vents	VP	1
	9-9208	Installation—D-5 fuel valve bracket (LH)	VP	NP
	9-9208-1	Installation—D-5 fuel valve bracket (RH)	VP	NP
55	9-9208-7	Bracket Assembly (LH)	VP	2
	9-9208-8	Bracket Assembly (RH)	VP	2
56	9-7996	Installation—D-5 fuel valve bracket (LH) (see fig. 69)	VP	NP
	9-7995	Installation—D-5 fuel valve bracket (RH)	VP	NP

PUBLISHED BY AVIALOGS.COM

WING

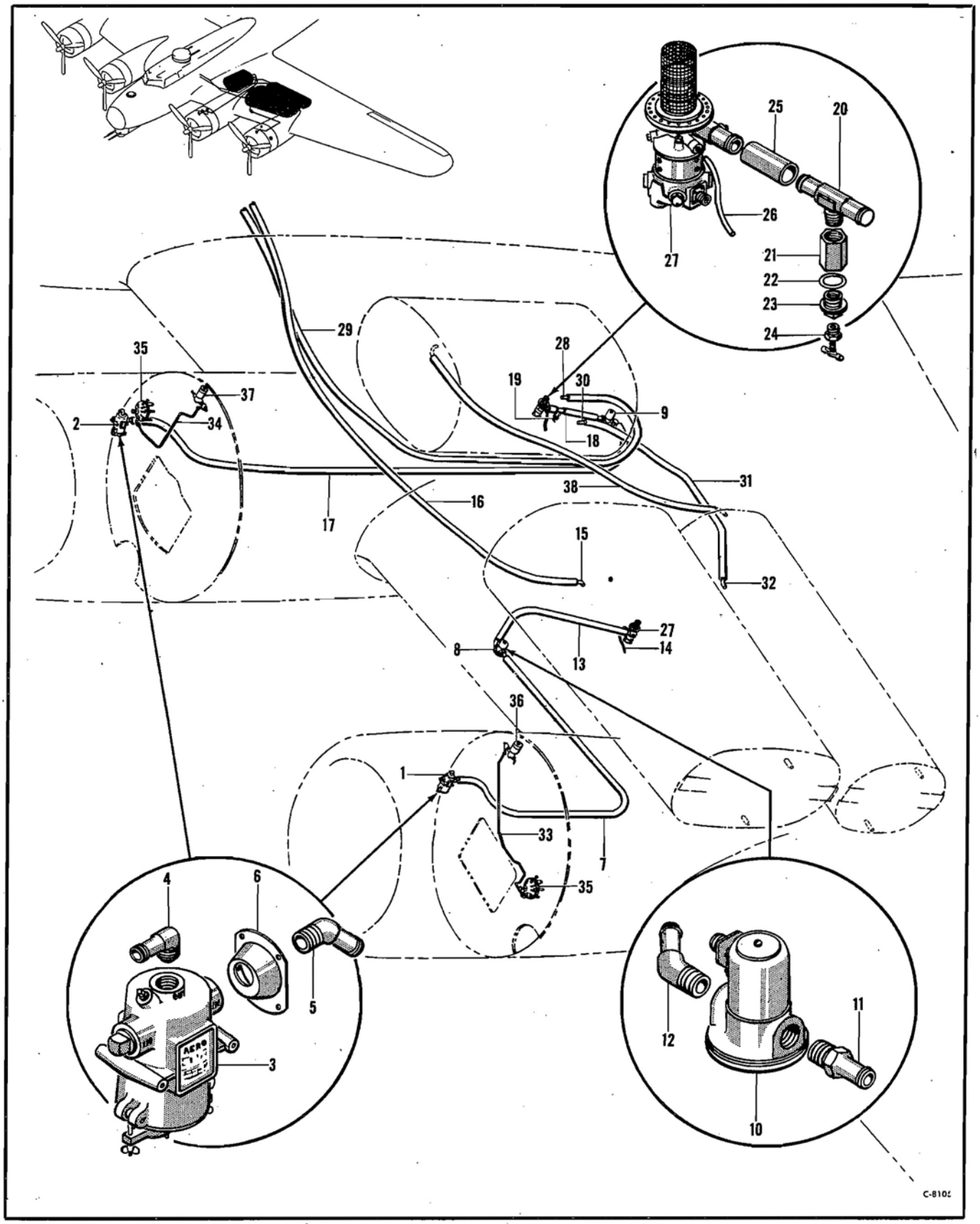

Figure 23—Inboard Fuel Tubing

PUBLISHED BY AVIALOGS.COM

WING

Inboard Fuel Tubing

Figure & Index No.	Part Number	1 2 3 4 5 6 7 Nomenclature	Usage Code	Units Per Assy
		Inboard Fuel Tubing		
	15-9471	Installation—Fuel tubing	All	NP
	6-9352	Installation—Outboard fuel strainer (LH)	All	NP
	6-9352-1	Installation—Outboard fuel strainer (RH)	All	NP
	6-9588	Installation—Inboard fuel strainer (LH)	All	NP
	6-9588-1	Installation—Inboard fuel strainer (RH)	All	NP
23-1	6-9352-2	Strainer Assembly—Fuel (LH outboard)	All	1
	6-9352-3	Strainer Assembly—Fuel (RH outboard)	All	1
2	6-9588-2	Strainer Assembly—Fuel (LH inboard)	All	1
	6-9588-3	Strainer Assembly—Fuel (RH inboard)	LC	1
	6-9588-7	Strainer Assembly—Fuel (RH inboard)	MP	1
3	13960-3	Strainer Assembly—Type C-4 (Aero Supply)	All	1
4	AN842-16	Elbow—90 degree pipe thread hose (LH & RH outboard and LH inboard)	All	1
	AN844-16	Elbow—45 degree pipe thread hose (RH inboard)	All	1
5	AN844-16	Elbow—45 degree pipe thread hose (inboard)	All	2
	AN840-16	Adapter—Hose to pipe thread (outboard)	All	1
6	1-19817-3	Cup—Fuel strainer (LH inboard)	All	1
	1-19817-2	Cup—Fuel strainer (RH inboard)	All	1
7	55-7348-401	Hose	All	2
	6-10132	Installation—Fuel shut-off valve (LH)	All	NP
	6-10132-1	Installation—Fuel shut-off valve (RH)	All	NP
	6-10131	Installation—Inboard fuel shut-off valve (LH)	All	NP
	6-10131-1	Installation—Inboard fuel shut-off valve (RH)	All	NP
8	6-10132-2	Unit Assembly—Shut-off valve (LH)	All	1
	6-10132-3	Unit Assembly—Shut-off valve (RH)	All	1
9	6-10131-2	Unit Assembly—Fuel shut-off valve (LH)	All	1
	6-10131-3	Unit Assembly—Fuel shut-off valve (RH)	All	1
10	2660	Valve Assembly—Fuel shut-off (Electrimatic)	All	1
11	AN840-16	Adapter—Hose to pipe thread	All	1
12	AN844-16	Elbow—45 degree pipe thread hose (outboard)	All	1
	AN842-16	Elbow—90 degree pipe thread hose (inboard)	All	1
13	55-7348-400	Hose	All	2
14	15-7348-117	Tube Assembly (LH)	All	1
	15-7348-119	Tube Assembly (RH)	All	1
15	1-20071-1	Elbow—Special 90 degree one inch hose	E	2
	*3-24626	Elbow—Special 90 degree one inch hose	PE	2
16	15-7348-3	Hose	ZA	2
	15-9471-39	Hose	VK	2
17	55-7348-402	Hose	All	2
18	55-7348-403	Hose	All	2
19	15-9471-2	Tee Assembly	All	2
20	1-24222-28	Tee	All	1
21	1-18619	Extension—Tank drain	All	1
22	AN900-16	Gasket—Copper annular	All	1
23	908-16	Plug—Square head	All	1
24	AN771-2	Cock—Screw type drain	All	1
25	15-7348-115	Hose	All	2
26	15-7348-114	Tube Assembly	All	2
27	TFD12000	Pump Assembly—Fuel booster (Thompson) (see T.O. 03-10EC-4)	All	4
28	15-7348-125	Tube	E	2
	*3-24642	Tube—1 in. outside diameter	PE	2
29	15-7348-122	Hose	All	2
30	15-7348-124	Tube	E	2
	*3-24429	Sleeve	PE	2
31	15-7348-1	Hose	ZA	2
	15-9471-38	Hose	VK	2
32	1-20072-2	Elbow—Special 30 degree 1 1-4 hose	E	2
	*3-25297	Elbow—Special 30 degree 1 1-4 hose	PE	2
	15-11692	Installation—Transmitter (nacelle no. 1)	All	NP
	15-11695	Installation—Transmitter (nacelle no. 4)	All	NP
	15-11693	Installation—Transmitter (nacelle no. 2)	All	NP
	15-11694	Installation—Transmitter (nacelle no. 3)	All	NP
33	15-11692-3	Tube Assembly—Fuel pressure (nacelle no. 1)	WB	1
	15-11692-6	Tube Assembly—Fuel pressure (nacelle no. 1)	MN	1
	15-11692-9	Tube Assembly—Fuel pressure (nacelle no. 1)	MP	1
	15-11695-3	Tube Assembly—Fuel pressure (nacelle no. 4)	WB	1
	15-11695-7	Tube Assembly—Fuel pressure (nacelle no. 4)	MN	1
	15-11695-10	Tube Assembly—Fuel pressure (nacelle no. 4)	MP	1
34	15-11693-3	Tube Assembly—Fuel pressure (nacelle no. 2)	WB	1
	15-11693-6	Tube Assembly—Fuel pressure (nacelle no. 2)	QN	1
	15-11694-3	Tube Assembly—Fuel pressure (nacelle no. 3)	WB	1
	15-11694-9	Tube Assembly—Fuel pressure (nacelle no. 3)	MN	1
	15-11694-12	Tube Assembly—Fuel pressure (nacelle no. 3)	MP	1
	15-11692-1	Transmitter Assembly—Fuel (nacelle no. 1)	WB	1
	15-11693-1	Transmitter Assembly—Fuel (nacelle no. 2)	WB	1
	15-11694-1	Transmitter Assembly—Fuel (nacelle no. 3)	WB	1
	15-11695-1	Transmitter Assembly—Fuel (nacelle no. 4)	WB	1
	6-18301-2	Transmitter Assembly (nacelle no. 1, 2 and 3)	MN	1
	6-18301-8	Transmitter Assembly (nacelle no. 1, 2 and 3)	MP	1
	6-18301	Transmitter Assembly (nacelle no. 4)	MN	1
	6-18301-7	Transmitter Assembly (nacelle no. 4)	MP	1
	6-18301-4	Transmitter Assembly—Fuel	MN	1
	6-18301-6	Transmitter Assembly—Fuel	MP	1
35	NO NUMBER	Transmitter—Pres (type A-1) (Spec 27383-A) GFE	WB	1
	NO NUMBER	Transmitter—Pres (type A-1) (Spec 27383-A) GFE	QN	1
	6-18300	Bracket Assembly—Transmitter	QN	1
36	53-11715	Installation—Oil dilution valve (outboard) (see fig. 30)	All	NP
37	43-11714-5	Installation—Oil dilution valve (LH inboard) (see fig. 30)	All	NP
	43-11714-6	Installation—Oil dilution valve (RH inboard) (see fig. 30)	All	NP
	15-10408	Installation—Wing fuel tank	All	NP
38	15-7029-2	Hose—Vent	ZA	1
	15-10408-8	Hose—Vent	VK	1

*These parts may be procured together by ordering Kit No. 2375.

PUBLISHED BY AVIALOGS.COM

WING

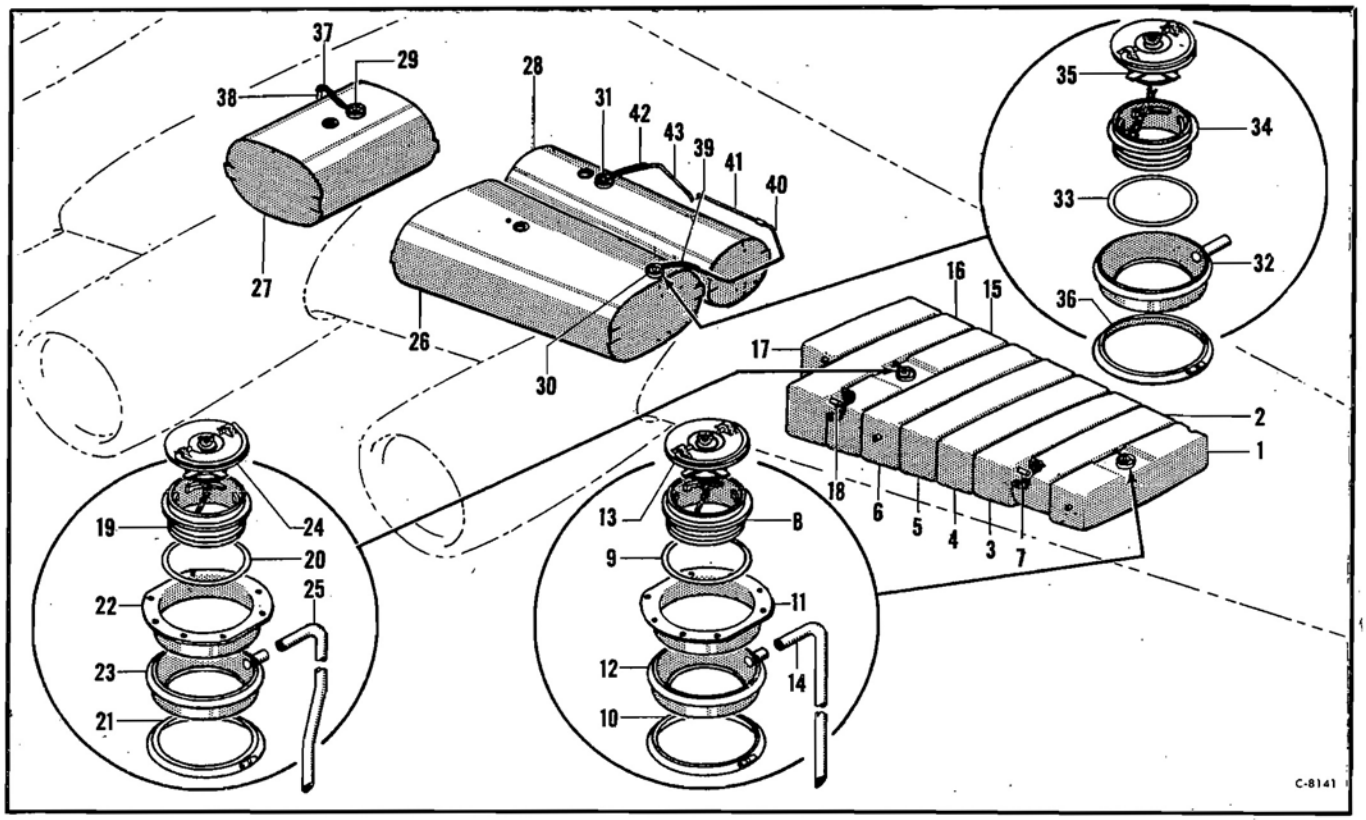

Figure 24—Wing Fuel Tanks

Wing Fuel Tanks

Figure & Index No.	Part Number	1 2 3 4 5 6 7 Nomenclature	Usage Code	Units Per Assy.
		Wing Fuel Tanks		
	15-10390	Installation—Outboard wing tank (LH)	All	NP
	15-10390-1	Installation—Outboard wing tank (RH)	All	NP
	15-10391	Tank Assembly—Outboard wing fuel (LH)	CD	1
	15-10391-1	Tank Assembly—Outboard wing fuel (RH)	CD	1
	15-13711	Tank Assembly—Outboard wing fuel (LH)	LQ	1
	15-13711-1	Tank Assembly—Outboard wing fuel (RH)	LQ	1
24-1	2F1-6-2831	Tank (LH) (Goodyear)	CD	1
	2F1-6-2831-1	Tank (RH) (Goodyear)	CD	1
	2F1-6-7241	Tank (LH) (Goodyear)	LQ	1
	2F1-6-7241-1	Tank (RH) (Goodyear)	LQ	1
	15-10392	Tank Assembly—Outboard wing fuel (LH)	CD	1
	15-10392-1	Tank Assembly—Outboard wing fuel (RH)	CD	1
	15-13712	Tank Assembly—Outboard wing fuel (LH)	LQ	1
	15-13412-1	Tank Assembly—Outboard wing fuel (RH)	LQ	1
2	2F1-6-2832	Tank (LH) (Goodyear)	CD	1
	2F1-6-2832-1	Tank (RH) (Goodyear)	CD	1
	2F1-6-7242	Tank (LH) (Goodyear)	LQ	1
	2F1-6-7242-1	Tank (RH) (Goodyear)	LQ	1
	15-10393	Tank Assembly—Outboard wing fuel (LH)	CD	1
	15-10393-1	Tank Assembly—Outboard wing fuel (RH)	CD	1
	15-13713	Tank Assembly—Outboard wing fuel (LH)	LQ	1
	15-13713-1	Tank Assembly—Outboard wing fuel (RH)	LQ	1
3	2F1-6-2833	Tank (LH) (Goodyear)	CD	1
	2F1-6-2833-1	Tank (RH) (Goodyear)	CD	1
	2F1-6-7243	Tank (LH) (Goodyear)	LQ	1
	2F1-6-7243-1	Tank (RH) (Goodyear)	LQ	1
	15-10394	Tank Assembly—Outboard wing fuel (LH)	CD	1
	15-10394-1	Tank Assembly—Outboard wing fuel (RH)	CD	1
	15-13714	Tank Assembly—Outboard wing fuel (LH)	LQ	1
	15-13714-1	Tank Assembly—Outboard wing fuel (RH)	LQ	1
4	2F1-6-2834	Tank (LH) (Goodyear)	CD	1
	2F1-6-2834-1	Tank (RH) (Goodyear)	CD	1
	2F1-6-7244	Tank (LH) (Goodyear)	LQ	1
	2F1-6-7244-1	Tank (RH) (Goodyear)	LQ	1
	15-10395	Tank Assembly—Outboard wing fuel (LH)	CD	1
	15-10395-1	Tank Assembly—Outboard wing fuel (RH)	CD	1
	15-13715	Tank Assembly—Outboard wing fuel (LH)	LQ	1
	15-13715-1	Tank Assembly—Outboard wing fuel (RH)	LQ	1
5	2F1-6-2835	Tank (LH) (Goodyear)	CD	1
	2F1-6-2835-1	Tank (RH) (Goodyear)	CD	1
	2F1-6-7245	Tank (LH) (Goodyear)	LQ	1
	2F1-6-7245-1	Tank (RH) (Goodyear)	LQ	1
	15-10396	Tank Assembly—Outboard wing fuel (LH)	CD	1
	15-10396-1	Tank Assembly—Outboard wing fuel (RH)	CD	1
	15-13716	Tank Assembly—Outboard wing fuel (LH)	LQ	1
	15-13716-1	Tank Assembly—Outboard wing fuel (RH)	LQ	1

PUBLISHED BY AVIALOGS.COM

WING

Wing Fuel Tanks

Figure & Index No.	Part Number	1 2 3 4 5 6 7 Nomenclature	Usage Code	Units Per Assy.
24-6	2F1-6-2836	Tank (LH) (Goodyear)	CD	1
	2F1-6-2836-1	Tank (RH) (Goodyear)	CD	1
	2F1-6-7246	Tank (LH) (Goodyear)	LQ	1
	2F1-6-7246-1	Tank (RH) (Goodyear)	LQ	1
7	1-27173	Tube—Interconnector	CD	4
	1-27173-1	Tube—Interconnector	LQ	4
8	3-13613-12	Nut Assembly—Tank filler unit	All	1
9	1-20016	Gasket—Annular	All	1
	6-13153	Adapter Assembly—Overflow (LH)	All	1
	6-13153-1	Adapter Assembly—Overflow (RH)	All	1
10	3-9351	Clamp Assembly—Overflow pan adapter	All	1
11	3-19046	Adapter—Overflow pan	All	1
12	3-19030	Pan Assembly—Fuel tank overflow	All	1
13	3-20757-7	Cap Assembly—Filler unit	DO	1
	3-20757-3	Cap Assembly—Filler unit	OO	1
14	15-10390-2	Tube (overflow drain) (LH)	All	1
	15-10390-3	Tube (overflow drain) (RH)	All	1
	15-10400	Installation—Inboard wing tank (LH)	All	NP
	15-10400-1	Installation—Inboard wing tank (RH)	All	NP
	15-3097	Tank Assembly—Inboard wing fuel (LH)	CD	1
	15-3097-1	Tank Assembly—Inboard wing fuel (RH)	CD	1
	15-13717	Tank Assembly—Outboard wing fuel (LH)	LQ	1
	15-13717-1	Tank Assembly—Outboard wing fuel (RH)	LQ	1
15	2F1-6-2837	Tank (LH) (Goodyear)	CD	1
	2F1-6-2837-1	Tank (RH) (Goodyear)	CD	1
	2F1-6-7247	Tank (LH) (Goodyear)	LQ	1
	2F1-6-7247-1	Tank (RH) (Goodyear)	LQ	1
	15-10398	Tank Assembly—Inboard wing fuel (LH)	CD	1
	15-10398-1	Tank Assembly—Inboard wing fuel (RH)	CD	1
	15-13718	Tank Assembly—Outboard wing fuel (LH)	LQ	1
	15-13718-1	Tank Assembly—Outboard wing fuel (RH)	LQ	1
16	2F1-6-2838	Tank (LH) (Goodyear)	CD	1
	2F1-6-2838-1	Tank (RH) (Goodyear)	CD	1
	2F1-6-7248	Tank (LH) (Goodyear)	LQ	1
	2F1-6-7248-1	Tank (RH) (Goodyear)	LQ	1
	15-10399	Tank Assembly—Inboard wing fuel (LH)	CD	1
	15-10399-1	Tank Assembly—Inboard wing fuel (RH)	CD	1
	15-13719	Tank Assembly—Outboard wing fuel (LH)	LQ	1
	15-13719-1	Tank Assembly—Outboard wing fuel (RH)	LQ	1
17	2F1-6-2839	Tank (LH) (Goodyear)	CD	1
	2F1-6-2839-1	Tank (RH) (Goodyear)	CD	1
	2F1-6-7249	Tank (LH) (Goodyear)	LQ	1
	2F1-6-7249-1	Tank (RH) (Goodyear)	LQ	1
18	1-12713-1	Tube—Interconnector	All	2
19	3-13613-11	Nut Assembly—Tank filler unit	All	1
20	1-20016	Gasket—Annular	All	1
	6-13153	Adapter Assembly—Overflow (LH)	All	1
	6-13153-1	Adapter Assembly—Overflow (RH)	All	1
21	3-9351	Clamp Assembly—Overflow pan adapter	All	1
22	3-19046	Adapter—Overflow pan	All	1
23	3-19030	Pan Assembly—Fuel tank overflow	All	1
24	3-20757-7	Cap Assembly—Filler unit	All	1
25	15-10400-2	Tube (overflow drain) (LH)	All	1
	15-10400-3	Tube (overflow drain) (RH)	All	1
	15-10408	Installation—Wing fuel tank (LH)	All	NP
	15-10408-1	Installation—Wing fuel tank (RH)	All	NP
	9-5327	Tank Assembly—Engine no. 1 fuel	ZA	1
	9-5327-1	Tank Assembly—Engine no. 4 fuel	ZA	1
	15-13050	Tank Assembly—Engine no. 1 fuel	VK	1
	15-13050-1	Tank Assembly—Engine no. 4 fuel	VK	1
26	2F1-6-3602	Tank (LH) (Goodyear)	ZA	1
	2F1-6-3602-1	Tank (RH) (Goodyear)	ZA	1
	2F1-6-7153	Tank (LH) (Goodyear)	VK	1
	2F1-6-7153-1	Tank (RH) (Goodyear)	VK	1
	9-3769	Tank Assembly—Engine no. 2 fuel	ZA	1
	9-3769-1	Tank Assembly—Engine no. 3 fuel	ZA	1
	15-13049	Tank Assembly—Engine no. 2 fuel	VK	1
	15-13049-1	Tank Assembly—Engine no. 3 fuel	VK	1
27	2F1-6-1426	Tank (LH) (Goodyear)	ZA	1
	2F1-6-1426-1	Tank (RH) (Goodyear)	ZA	1
	2F1-6-7154	Tank (LH) (Goodyear)	VK	1
	2F1-6-7154-1	Tank (RH) (Goodyear)	VK	1
	9-5326	Tank Assembly—Fuel feeder (LH)	ZA	1
	9-5326-1	Tank Assembly—Fuel feeder (RH)	ZA	1
	15-13048	Tank Assembly—Fuel feeder (LH)	VK	1
	15-13048-1	Tank Assembly—Fuel feeder (RH)	VK	1
28	2F1-6-3603	Tank (LH) (Goodyear)	ZA	1
	2F1-6-3603-1	Tank (RH) (Goodyear)	ZA	1
	2F1-6-7152	Tank (LH) (Goodyear)	VK	1
	2F1-6-7152-1	Tank (RH) (Goodyear)	VK	1
29	6-14061	Installation—Tank filler cap (eng no. 2 & 3 tank)	All	NP
30	6-14061-1	Installation—Tank filler cap (eng no. 1 & 4 tank)	All	NP
31	6-14061-2	Installation—Tank filler cap (fuel feeder tank)	All	NP
32	3-9287	Pan Assembly—Fuel tank overflow	All	1
33	1-20016	Gasket—Annular	All	1
34	3-13613-13	Nut Assy—Tank filler unit (eng no. 2 & 3 tank)	All	1
	3-13613-12	Nut Assy—Tank filler unit (eng no. 1 & 4 tank)	All	1
	3-13613-11	Nut Assy—Tank filler unit (fuel feeder tank)	All	1
35	3-20757	Cap Assy—Tank filler unit (eng no. 2 & 3 tank)	All	1
	3-20757-1	Cap Assy—Tank filler unit (eng no. 1 & 4 tank)	All	1
	3-20757-2	Cap Assy—Tank filler unit (fuel feeder tank)	All	1
36	3-9351	Clamp Assembly—Overflow pan adapter	All	3
37	AN884-10-84	Hose—Resistant synthetic	All	1
38	15-7029-8	Tube—Overflow	QB	1
	15-10408-6	Tube—Overflow	XM	1
39	AN884-10-80	Hose—Resistant synthetic	All	1
40	15-10408-3	Tube Assembly—Overflow (LH)	All	1
	15-7029-16	Tube—Overflow (RH)	All	1
41	15-10408-2	Tube Assembly—Overflow (LH)	All	1
	15-7029-18	Tube—Overflow (RH)	All	1
42	AN884-10-72	Hose—Resistant synthetic	All	1
43	15-7029-9	Tube—Overflow	All	1
	15-7029-11	Tube—Overflow	All	1

PUBLISHED BY AVIALOGS.COM

WING

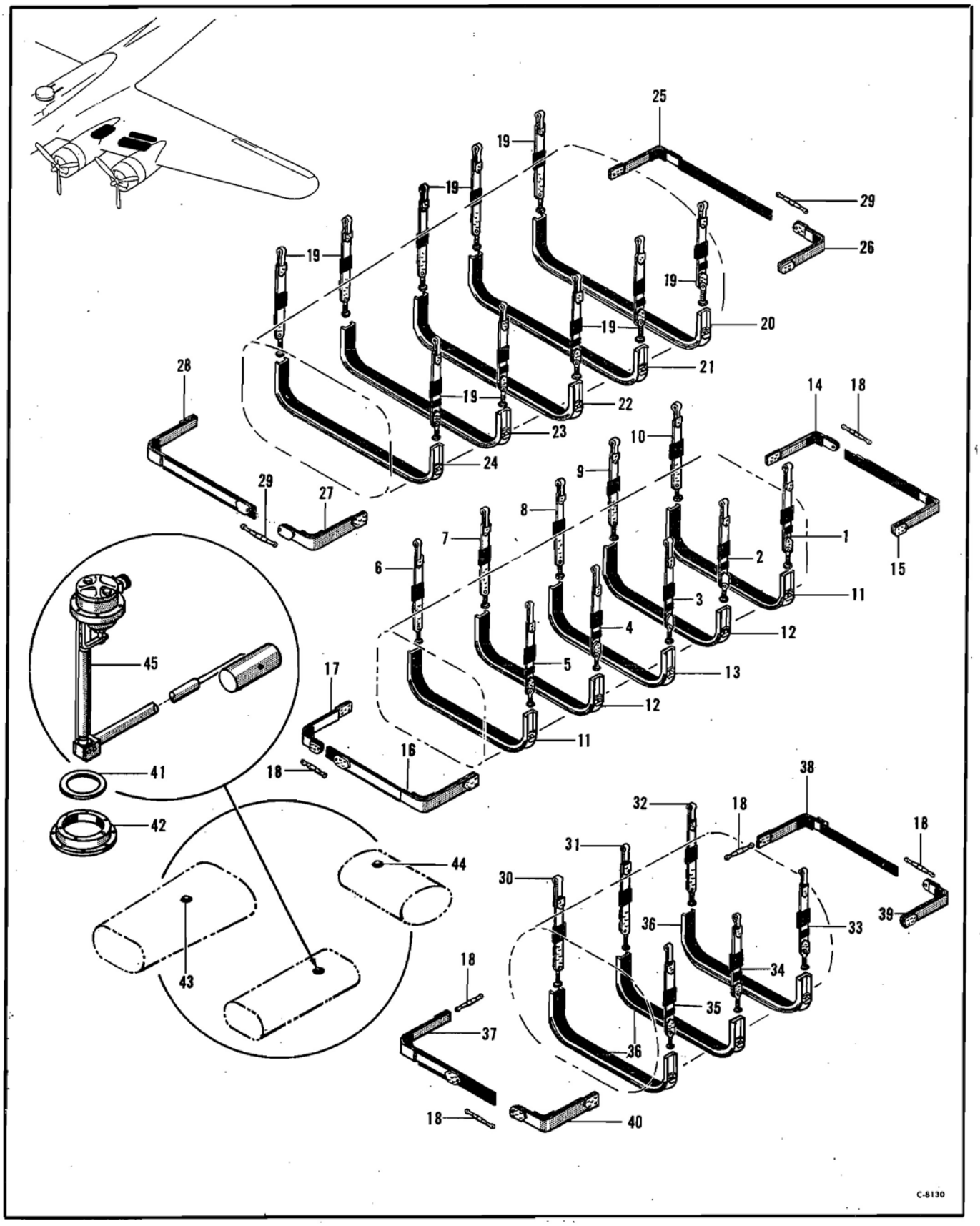

Figure 25—Wing Tank Supports

PUBLISHED BY AVIALOGS.COM

WING

Wing Tank Supports

Figure & Index No.	Part Number	1 2 3 4 5 6 7 Nomenclature	Usage Code	Units Per Assy.
		Wing Tank Supports		
	15-10408	Installation—Wing fuel tank	All	NP
25-1	6-10694-13	Strap Assembly—Fuel tank support (feeder)	All	1
2	6-10694-15	Strap Assembly—Fuel tank support (feeder)	All	1
3	6-10694-17	Strap Assembly—Fuel tank support (feeder)	All	1
4	6-10694-19	Strap Assembly—Fuel tank support (feeder)	All	1
5	6-10694-21	Strap Assembly—Fuel tank support (feeder)	All	1
6	6-10694-11	Strap Assembly—Fuel tank support (feeder)	All	1
7	6-10694-9	Strap Assembly—Fuel tank support (feeder)	All	1
8	6-10694-7	Strap Assembly—Fuel tank support (feeder)	All	1
9	6-10694-5	Strap Assembly—Fuel tank support (feeder)	All	1
10	6-10694-3	Strap Assembly—Fuel tank support (feeder)	All	1
11	6-8969-5	Beam Assembly—Fuel tank support (feeder)	All	2
12	6-8969-500	Beam Assembly—Fuel tank support (feeder)	All	2
13	6-9597-3	Beam Assembly—Fuel tank support (feeder)	All	1
14	3-13453-5	Strap Assembly—Fuel tank end brace (feeder)	All	1
15	3-13457-5	Strap Assembly—Fuel tank end brace (feeder)	All	1
16	3-13451-5	Strap Assembly—Fuel tank end brace (feeder)	All	1
17	3-1300-5	Strap Assembly—Fuel tank end brace (feeder)	All	1
18	AN150-21S	Turnbuckle Assembly—Fork	All	6
	AN703-1500	Tie Rod—Internal	All	4
	AN703-1350	Tie Rod—Internal	All	4
	AN665-21L	Terminal—Clevis type (LH)	All	8
	AN665-21R	Terminal—Clevis type (RH)	All	8
	AN315-3L	Nut—Aircraft plain (LH)	All	8
	AN315-3R	Nut—Aircraft plain (RH)	All	8
19	6-10694-1	Strap Assembly—Fuel tank support (outboard engine tanks)	All	10
20	7-1521-6	Beam Assembly—Fuel tank support (LH outboard engine tank)	All	1
	7-1521-7	Beam Assembly—Fuel tank support (RH outboard engine tank)	All	1
21	7-1520-5	Beam Assembly—Fuel tank support (LH outboard engine tank)	All	1
	7-1520-6	Beam Assembly—Fuel tank support (RH outboard engine tank)	All	1
22	7-1509-4	Beam Assembly—Fuel tank support (LH outboard engine tank)	All	1
	7-1509-5	Beam Assembly—Fuel tank support (RH outboard engine tank)	All	1
23	7-1519-6	Beam Assembly—Fuel tank support (LH outboard engine tank)	All	1
	7-1519-7	Beam Assembly—Fuel tank support (RH outboard engine tank)	All	1
24	7-1500-42	Beam Assembly—Fuel tank support (LH outboard engine tank)	All	1
	7-1500-43	Beam Assembly—Fuel tank support (RH outboard engine tank)	All	1
25	6-9593	Strap Assembly—Fuel tank end brace (outboard engine tanks)	All	1
26	3-13902	Strap Assembly—Fuel tank end brace (outboard engine tanks)	All	1
27	3-13901	Strap Assembly—Fuel tank end brace (outboard engine tanks)	All	1
28	6-9592	Strap Assembly—Fuel tank end brace (outboard engine tanks)	All	1
29	AN150-32S	Turnbuckle Assembly—Fork	All	2
	AN704-1500	Tie Rod—Internal	All	7
	AN704-1575	Tie Rod—Internal	All	1
	AN665-34L	Terminal—Clevis type (LH)	All	8
	AN665-34R	Terminal—Clevis type (RH)	All	8
	AN315-4L	Nut—Aircraft plain (LH)	All	8
	AN315-4R	Nut—Aircraft plain (RH)	All	8
30	6-10693-1	Strap Assembly—Fuel tank support (inboard engine tanks)	All	1
31	6-10693-3	Strap Assembly—Fuel tank support (inboard engine tanks)	All	1
32	6-10693-5	Strap Assembly—Fuel tank support (inboard engine tanks)	All	1
33	6-10693-11	Strap Assembly—Fuel tank support (inboard engine tanks)	All	1
34	6-10693-9	Strap Assembly—Fuel tank support (inboard engine tanks)	All	1
35	6-10693-7	Strap Assembly—Fuel tank support (inboard engine tanks)	All	1
36	46-8978	Beam Assembly—Fuel tank support (inboard engine tanks)	All	3
37	3-13491-4	Strap Assembly—Fuel tank end brace (inboard engine tanks)	All	1
38	3-13490-4	Strap Assembly—Fuel tank end brace (inboard engine tanks)	All	1
39	3-13464-5	Strap Assembly—Fuel tank end brace (inboard engine tanks)	All	1
40	3-13467-5	Strap Assembly—Fuel tank end brace (inboard engine tanks)	All	1
	AN703-1900	Tie Rod—Internal	All	1
	AN703-2150	Tie Rod—Internal	All	1
	AN665-21L	Terminal—Clevis type (LH)	All	4
	AN665-21R	Terminal—Clevis type (RH)	All	4
	AN315-3L	Nut—Aircraft plain (LH)	All	4
	AN315-3R	Nut—Aircraft plain (RH)	All	4
41	1-18437-1	Gasket	All	3
42	3-14658	Plate	All	3
43	EA15-10	Unit Assembly—Fuel gage (Liquidometer)	RF	1
	EA15W	Unit Assembly—Fuel gage (Liquidometer)	K	1
44	EA15-11	Unit Assembly—Fuel gage (Liquidometer)	NG	1
	EA15W	Unit Assembly—Fuel gage (Liquidometer)	T	1
45	EA15-12	Unit Assembly—Fuel gage (Liquidometer)	DG	1
	EA15W	Unit Assembly—Fuel gage (Liquidometer)	S	1

PUBLISHED BY AVIALOGS.COM

WING

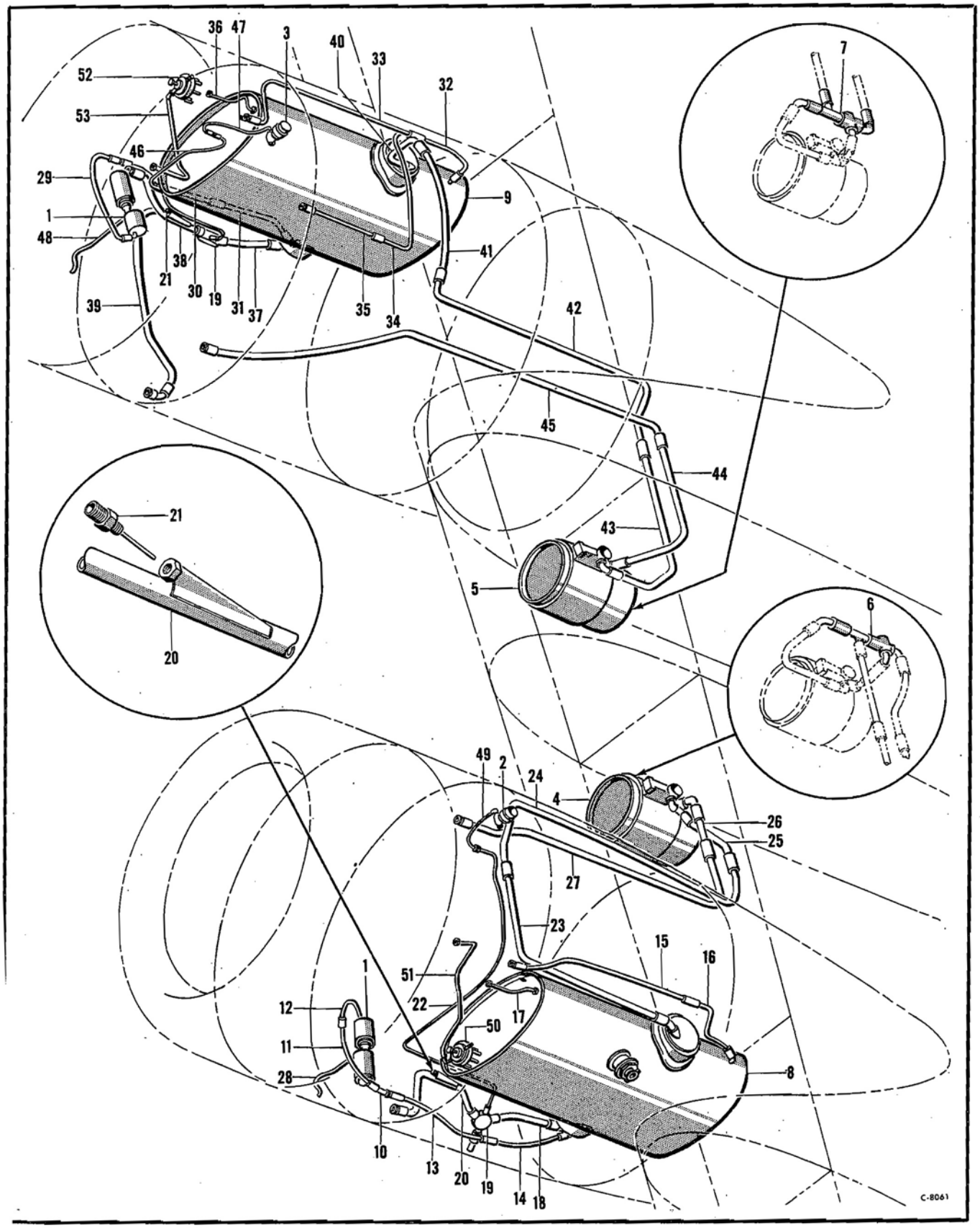

Figure 26—LH Wing Oil System

PUBLISHED BY AVIALOGS.COM

WING

LH Wing Oil System

Figure & Index No.	Part Number	1 2 3 4 5 6 7 Nomenclature	Usage Code	Units Per Assy.
		LH Wing Oil System		
	15-9470	Installation—Oil system	All	NP
	15-9470-50	Pump Assembly—Propeller feathering (no. 1 engine)	SA	1
	15-14787	Pump Assembly—Propeller feathering (no. 1 engine)	TJ	1
	15-14787-1	Pump Assembly—Propeller feathering (no. 1 engine)	DL	1
	15-14787-4	Pump Assembly—Propeller feathering (no. 1 engine)	BM	1
	15-14787-5	Pump Assembly—Propeller feathering (no. 1 engine)	MP	1
	15-9470-49	Pump Assembly—Propeller feathering (no. 2 engine)	SA	1
	15-14788	Pump Assembly—Propeller feathering (no. 2 engine)	TJ	1
	15-14788-1	Pump Assembly—Propeller feathering (no. 2 engine)	DL	1
	15-14788-4	Pump Assembly—Propeller feathering (no. 2 engine)	BM	1
	15-14788-5	Pump Assembly—Propeller feathering (no. 2 engine)	MP	1
26-1	54772-2	Motor and Pump (Hamilton) GFE	SA	1
	54772-21	Motor and Pump (Hamilton) GFE	VJ	1
2	53-11715	Installation—Oil dilution valve (LH outboard) (see fig. 30)	All	NP
3	43-11714-5	Installation—Oil dilution valve (LH inboard) (see fig. 30)	All	NP
4	15-7772	Installation—Oil temperature regulator (LH outboard) (see fig. 29)	All	NP
5	15-7773	Installation—Oil temperature regulator (LH inboard) (see fig. 29)	All	NP
6	15-12943	Installation—Oil surge valve (nacelle no. 1) (see fig. 30)	BG	NP
7	15-12944	Installation—Oil surge valve (nacelle no. 2) (see fig. 30)	BG	NP
8	15-8541	Installation—Oil tank (LH outboard) (see fig. 28)	All	NP
9	15-8522	Installation—Oil tank (LH inboard) (see fig. 28)	All	NP
10	3-25257	Fitting Assembly—Propeller feathering line (no. 1 engine)	RL	1
11	15-9470-237	Tube Assembly	RL	1
	15-9470-238	Tube Assembly	AM	1
	15-9470-251	Tube Assembly	IP	1
12	15-9470-250	Tube Assembly	CM	1
13	15-9470-194	Tube Assembly	KL	1
	15-9470-239	Tube Assembly	CM	1
14	15-9470-195	Tube Assembly	RL	1
	15-9470-240	Tube Assembly	CM	1
15	55-6242-49	Tube Assembly	All	1
16	65-6242-620	Tube Assembly	UC	1
	15-9470-217	Tube Assembly	YP	1
17	65-6242-616	Tube Assembly	UC	1
	AN878-8-28	Hose—Synthetic	YP	1
18	65-6242-608	Tube Assembly	All	1
19	1400B5-1	Oock Assembly—"Y" (Koehler) (37D6114-5)	All	2
20	65-6242-666	Tube Assembly—Weld	All	1
21	AN5525-2	Bulb—Resistance	All	2
22	65-6242-604	Tube Assembly	All	1
23	65-6242-679	Tube Assembly	E	1
	15-9470-124	Tube Assembly	ZE	1
24	65-6242-677	Tube Assembly	E	1
	15-9470-136	Tube Assembly	KE	1
	15-9470-125	Tube Assembly	CG	1
25	15-9470-31	Tube Assembly	R	1
	15-9470-94	Tube Assembly	HO	1
26	15-9470-30	Tube Assembly	R	1
	15-9470-95	Tube Assembly	HO	1
27	15-9470-29	Tube Assembly	R	1
	15-9470-126	Tube Assembly	CG	1
28	55-6242-90	Tube Assembly	LC	1
	15-9470-254	Tube Assembly—Drain	MP	1
29	15-9470-207	Tube Assembly	RL	1
	15-9470-241	Tube Assembly	CM	1
30	15-9470-208	Tube Assembly	RL	1
	15-9470-242	Tube Assembly	CM	1
31	15-9470-209	Tube Assembly	KL	1
	15-9470-243	Tube Assembly	CM	1
32	65-6242-621	Tube Assembly	UC	1
	15-9470-217	Tube Assembly	YP	1
33	15-9470-632	Tube Assembly	GC	1
34	15-9470-227	Tube Assembly	RO	1
35	15-9470-226	Tube Assembly	RO	1
36	65-6242-617	Tube Assembly	UC	1
	AN878-8-25	Hose—Synthetic	YP	1
37	65-6242-676	Tube Assembly	T	1
	65-6242-67	Tube Assembly	NG	1
38	65-6242-667	Weld Assembly	T	1
	15-9470-142	Weld Assembly	NG	1
39	15-9470-143	Tube Assembly	NG	1
40	15-9470-24	Tube Assembly	All	1
41	65-6242-674	Tube Assembly	All	1
42	65-6242-673	Tube Assembly	R	1
	65-6242-130	Tube Assembly	BG	1
	65-6242-153	Tube Assembly	HO	1
43	65-6242-22	Tube Assembly	R	1
	65-6242-154	Tube Assembly	HO	1
44	65-6242-21	Tube Assembly	R	1
	65-6242-152	Tube Assembly	HO	1
45	65-6242-23	Tube Assembly	R	1
	65-6242-132	Tube Assembly	BG	1
	65-6242-108	Tube Assembly	HO	1
46	65-6242-605	Tube Assembly	T	1
	65-6242-69	Tube Assembly	NG	1
47	55-6242-544	Tube Assembly	All	1
48	55-6242-92	Tube Assembly	LC	1
	55-6242-256	Tube Assembly	MP	1
49	15-9470-10	Tube Assembly	All	1
50	15-11692	Installation—Transmitter (nacelle no. 1) (see fig. 28)	All	NP
51	AN878-4-146	Hose—Synthetic (see fig. 190)	All	1
52	15-11693	Installation—Transmitter (nacelle no. 2) (see fig. 28)	All	NP
53	AN878-4-118	Hose—Synthetic (see fig. 191)	All	1

PUBLISHED BY AVIALOGS.COM

WING

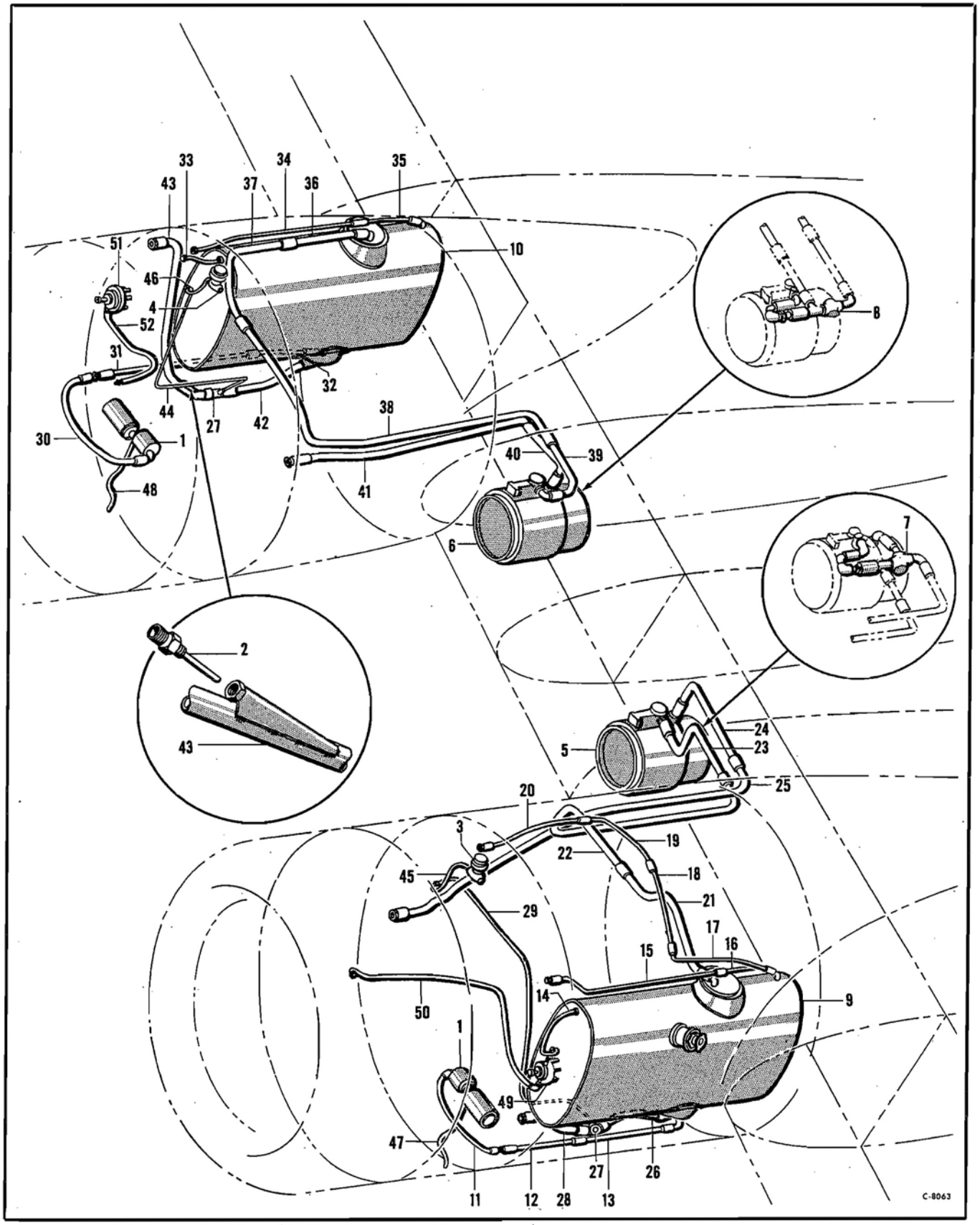

Figure 27—RH Wing Oil System

PUBLISHED BY AVIALOGS.COM

WING

RH Wing Oil System

Figure & Index No.	Part Number	1 2 3 4 5 6 7 Nomenclature	Usage Code	Units Per Assy.
		RH Wing Oil System		
	15-9470	Installation—Oil system	All	NP
	15-9470-48	Pump Assembly—Propeller feathering (no. 3 engine)	SA	1
	15-14789	Pump Assembly—Propeller feathering (no. 3 engine)	TJ	1
	15-14789-1	Pump Assembly—Propeller feathering (no. 3 engine)	DL	1
	15-14789-4	Pump Assembly—Propeller feathering (no. 3 engine)	BM	1
	15-14789-5	Pump Assembly—Propeller feathering (no. 3 engine)	MP	1
	15-9470-47	Pump Assembly—Propeller feathering (no. 4 engine)	SA	1
	15-14790	Pump Assembly—Propeller feathering (no. 4 engine)	TJ	1
	15-14790-1	Pump Assembly—Propeller feathering (no. 4 engine)	DL	1
	15-14790-4	Pump Assembly—Propeller feathering (no. 4 engine)	BM	1
	15-14790-5	Pump Assembly—Propeller feathering (no. 4 engine)	MP	1
27-1	54772-2	Motor and Pump (Hamilton) GFE	SA	1
	54772-21	Motor and Pump (Hamilton) GFE	BJ	1
2	AN5525-2	Bulb—Thermometer	All	2
3	43-11714-6	Installation—Oil dilution valve (RH inboard) (see fig. 30)	All	NP
4	53-11715	Installation—Oil dilution valve (RH outboard) (see fig. 30)	All	NP
5	15-7773-1	Installation—Oil temperature regulator (RH inboard) (see fig. 29)	All	NP
6	15-7772-1	Installation—Oil temperature regulator (RH outboard) (see fig. 29)	All	NP
7	15-12945	Installation—Oil surge valve (nacelle no. 3) (see fig. 30)	BG	NP
8	15-12946	Installation—Oil surge valve (nacelle no. 4) (see fig. 30)	BG	NP
9	15-8522-1	Installation—Oil tank (RH inboard) (see fig. 28)	All	NP
10	15-8541-1	Installation—Oil tank (RH outboard) (see fig. 28)	All	NP
11	15-9470-199	Tube Assembly	RL	1
	15-9470-244	Tube Assembly	CM	1
12	15-9470-200	Tube Assembly	RL	1
	15-9470-245	Tube Assembly	CM	1
13	15-9470-201	Tube Assembly	RL	1
	15-9470-246	Tube Assembly	CM	1
14	65-6242-618	Tube Assembly	UC	1
15	65-6242-633	Tube Assembly	GC	1
16	65-6242-621	Tube Assembly	UC	1
	15-9470-219	Tube Assembly	YP	1
17	15-9470-234	Tube Assembly	RO	1
18	15-9470-233	Tube Assembly	RO	1
19	15-9470-232	Tube Assembly	RO	1
20	15-9470-231	Tube Assembly	RO	1
21	15-9470-59	Tube Assembly	E	1
	15-9470-137	Tube Assembly	OE	1
	15-9470-221	Tube Assembly	HK	1
	15-9470-235	Tube Assembly	RO	1
22	65-6242-688	Tube Assembly	E	1
	15-9470-133	Tube Assembly	KE	1
	15-9470-127	Tube Assembly	AG	1
	15-9470-222	Tube Assembly	GK	1
	15-9470-158	Tube Assembly	HO	1
23	65-6242-690	Tube Assembly	R	1
	15-9470-159	Tube Assembly	HO	1
24	65-6242-689	Tube Assembly	R	1
	15-9470-157	Tube Assembly	HO	1
25	15-9470-51	Tube Assembly	R	1
	15-9470-128	Tube Assembly	CG	1
	15-9470-129	Tube Assembly	BG	1
26	65-6242-686	Tube Assembly	T	1
	15-9470-68	Tube Assembly	NG	1
27	1400B5-1	Cock Assembly—"Y" (Koehler)	All	2
28	65-6242-668	Tube Assembly—Weld	T	1
	15-9470-64	Tube Assembly—Weld	NG	1
29	65-6242-606	Tube Assembly	T	1
	15-9470-70	Tube Assembly	HG	1
	15-9470-223	Tube Assembly	IL	1
30	15-9470-204	Tube Assembly	RL	1
	15-9470-247	Tube Assembly	CM	1
31	15-9470-203	Tube Assembly	RL	1
	15-9470-248	Tube Assembly	CM	1
32	15-9470-202	Tube Assembly	RL	1
	15-9470-249	Tube Assembly	CM	1
33	65-6242-616	Tube Assembly	UC	1
34	55-6242-50	Tube Assembly	All	1
35	65-6242-622	Tube Assembly	UC	1
	15-9470-220	Tube Assembly	YP	1
36	15-9470-44	Tube Assembly	E	1
37	65-6242-682	Tube Assembly	E	1
	15-9470-131	Tube Assembly (Replaces Index no. 36)	ZE	1
38	15-9470-58	Tube Assembly	E	1
	15-9470-138	Tube Assembly	KE	1
	15-9470-134	Tube Assembly	CG	1
39	65-6242-687	Tube Assembly	R	1
	15-9470-163	Tube Assembly	HO	1
40	15-9470-45	Tube Assembly	R	1
	15-9470-161	Tube Assembly	HO	1
41	15-9470-43	Tube Assembly	R	1
	15-9470-135	Tube Assembly	CG	1
42	65-6242-608	Tube Assembly	All	1
43	65-6242-669	Tube Assembly—Weld	All	1
44	65-6242-607	Tube Assembly	All	1
45	15-9470-4	Tube Assembly	All	1
46	15-9470-10	Tube Assembly	All	1
47	55-6242-93	Tube (drain)	All	1
48	55-6242-91	Tube (drain)	All	1
49	15-11694	Installation—Transmitter (nac no. 3) (see fig. 28)	All	NP
50	AN878-4-146	Hose—Synthetic (see fig. 190)	All	1
51	15-11695	Installation—Transmitter (nac no. 4) (see fig. 28)	All	NP
52	AN878-4-122	Hose—Synthetic (see fig. 191)	All	1

PUBLISHED BY AVIALOGS.COM

WING

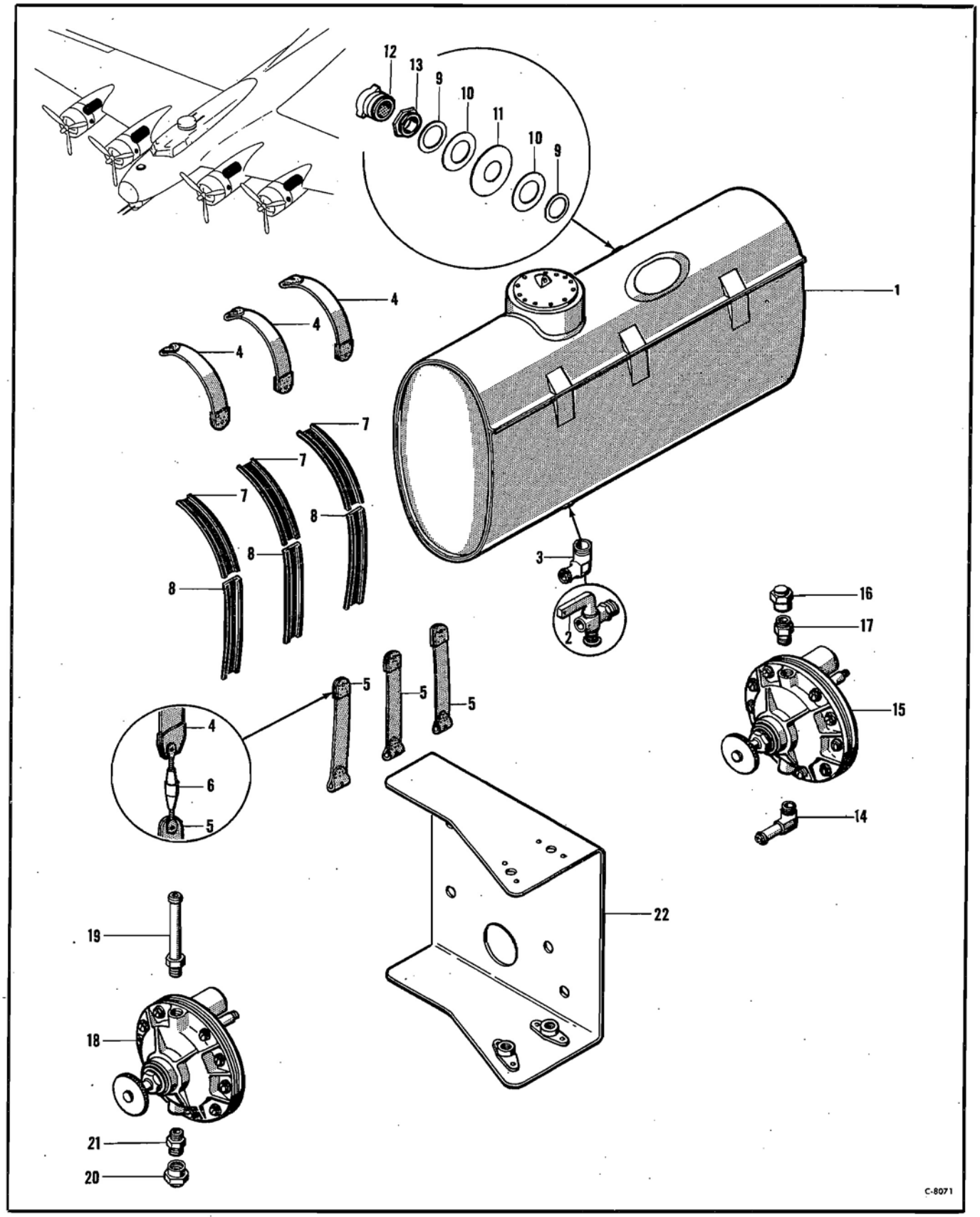

Figure 28—Engine Oil Tank and Oil Transmitter

PUBLISHED BY AVIALOGS.COM

WING

Engine Oil Tank and Oil Transmitter

Figure & Index No.	Part Number	1 2 3 4 5 6 7 Nomenclature	Usage Code	Units Per Assy.
		Engine Oil Tank and Oil Transmitter		
	15-8541	Installation—Outboard oil tank (LH) (see fig. 26)	All	NP
	15-8522	Installation—Inboard oil tank (LH) (see fig. 26)	All	NP
	15-8522-1	Installation—Inboard oil tank (RH) (see fig. 27)	All	NP
	15-8541-1	Installation—Outboard oil tank (RH) (see fig. 27)	All	NP
28-1	2F1-1-3074	Tank Assembly (LH outboard) (Goodyear)	IB	1
	2F1-1-3073	Tank Assembly (LH inboard) (Goodyear)	IB	1
	2F1-1-3073-1	Tank Assembly (RH inboard) (Goodyear)	IB	1
	2F1-1-3074-1	Tank Assembly (RH outboard) (Goodyear)	IB	1
	15-8541-4	Tank Assembly—LH (outboard)	RL	1
	15-8541-8	Tank Assembly—LH (outboard)	AM	1
	15-8541-10	Tank Assembly—LH (outboard)	HP	1
	15-8541-6	Tank Assembly—LH (outboard)	YP	1
	15-8522-4	Tank Assembly—LH (inboard)	RL	1
	15-8522-8	Tank Assembly—LH (inboard)	AM	1
	15-8522-10	Tank Assembly—LH (inboard)	HP	1
	15-8522-6	Tank Assembly—LH (inboard)	YP	1
	15-8522-5	Tank Assembly—RH (inboard)	RL	1
	15-8522-9	Tank Assembly—RH (inboard)	AM	1
	15-8522-11	Tank Assembly—RH (inboard)	HP	1
	15-8522-7	Tank Assembly—RH (inboard)	YP	1
	15-8541-5	Tank Assembly—RH (outboard)	RL	1
	15-8541-9	Tank Assembly—RH (outboard)	AM	1
	15-8541-11	Tank Assembly—RH (outboard)	HP	1
	15-8541-7	Tank Assembly—RH (outboard)	YP	1
	9-6883	Tank Assembly (LH outboard)	SL	1
	9-6883-1	Tank Assembly (LH inboard)	SL	1
	9-6883-2	Tank Assembly (RH inboard)	SL	1
	9-6883-3	Tank Assembly (RH outboard)	SL	1
	2F1-1-3074	Tank Assembly (LH outboard) (Goodyear)	SL	1
	2F1-1-3073	Tank Assembly (LH inboard) (Goodyear)	SL	1
	2F1-1-3073-1	Tank Assembly (RH inboard) (Goodyear)	SL	1
	2F1-1-3074-1	Tank Assembly (RH outboard) (Goodyear)	SL	1
	2F1-6-8459-4	Tank Assembly (LH outboard) (Goodyear)	YP	1
	2F1-6-8459-3	Tank Assembly (LH inboard) (Goodyear)	YP	1
	2F1-6-8459-1	Tank Assembly (RH inboard) (Goodyear)	YP	1
	2F1-6-8459-2	Tank Assembly (RH outboard) (Goodyear)	YP	1
2	770A2	Cock—Self lock drain	RL	1
	765-3	Cock—Shut off	IP	1
3	AN842-16	Elbow—90 degree hose	AM	1
4	3-14933	Strap Assembly—Oil tank	All	3
5	3-14985	Strap Assembly—Oil tank	All	3
6	AN150-465	Turnbuckle Assembly—Fork	All	3
7	1-16056-9-6	Cushion—Tank support	All	3
8	1-16056-19-6	Cushion—Tank support	All	3
9	AN900-41	Gasket—Annular copper	All	2
10	BAC1908-31AL	Washer—Countersunk	All	2
11	1-21424	Washer—Filler unit	All	1
	15-8541-2	Filler Assembly (outboard)	All	1
	15-8522-2	Filler Assembly (inboard)	All	1
	1-22655	Cap Assembly—Oil tank	All	1
12	42B3581	Cap—Tank	All	1
13	1-12965	Nut—Tank filler unit	All	1
	15-11692	Installation—Transmitter nacelle no. 1 (see fig. 26)	All	NP
	15-11693	Installation—Transmitter nacelle no. 2 (see fig. 26)	All	NP
	15-11694	Installation—Transmitter nacelle no. 3 (see fig. 27)	All	NP
	15-11695	Installation—Transmitter nacelle no. 4 (see fig. 27)	All	NP
	15-11692-2	Transmitter Assembly—Oil (nacelle no. 1)	XA	1
	15-11692-7	Transmitter Assembly—Oil (nacelle no. 1)	NK	1
	15-11693-2	Transmitter Assembly—Oil (nacelle no. 2)	XA	1
	15-11693-8	Transmitter Assembly—Oil (nacelle no. 2)	NK	1
	15-11694-2	Transmitter Assembly—Oil (nacelle no. 3)	XA	1
	15-11694-10	Transmitter Assembly—Oil (nacelle no. 3)	NK	1
	15-11695-2	Transmitter Assembly—Oil (nacelle no. 4)	XA	1
	15-11695-8	Transmitter Assembly—Oil (nacelle no. 4)	NK	1
14	NO NUMBER	Transmitter—Pressure (Spec 27383A Type A-1) GFE	All	1
15	AN842-4	Elbow—90 degree hose	NK	1
16	2150H	Cap (Rochester)	All	1
17	AN5832-2	Valve—Pressure gage lines	All	1
	6-18301-3	Transmitter Assembly—Oil pressure (nacelle nos. 1, 2 and 3)	QN	1
	6-18301-1	Transmitter Assembly—Oil pressure (nacelle no. 4)	QN	1
	6-18301-5	Transmitter Assembly—Oil	QN	1
18	NO NUMBER	Transmitter—Pressure (Spec 27383A Type A-1) GFE	All	1
19	AN840-4	Nipple—Pipe thread hose	QN	1
20	2150H	Cap (Rochester)	All	1
21	AN5832-2	Valve—Pressure gage lines	All	1
22	6-18300	Bracket Assembly—Transmitter	QN	1

PUBLISHED BY AVIALOGS.COM

WING

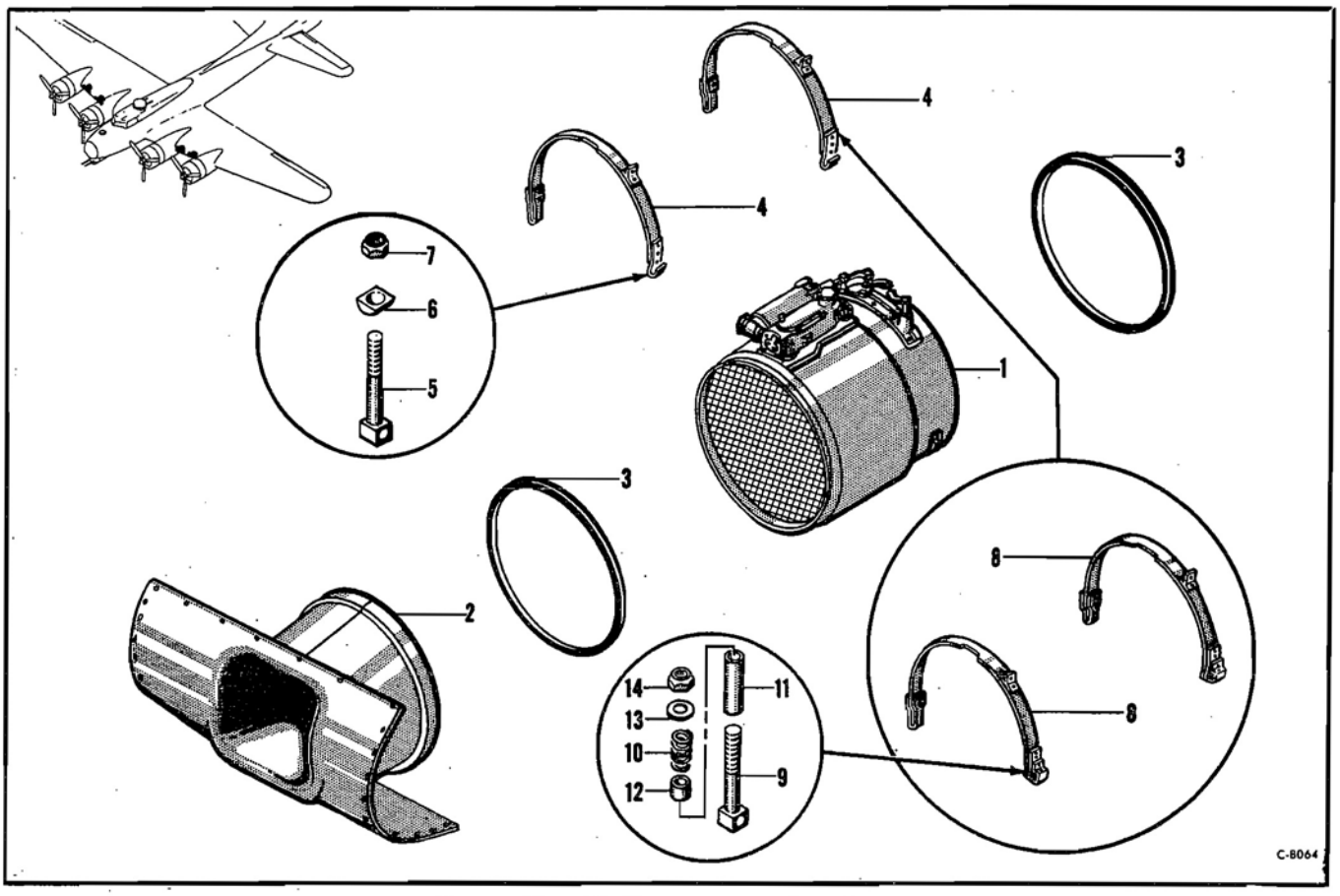

Figure 29—Oil Temperature Regulator

Oil Temperature Regulator

Figure & Index No.	Part Number	1 2 3 4 5 6 7 Nomenclature	Usage Code	Units Per Assy.
	15-7772	Installation—Oil temperature regulator (LH outboard) (see fig. 26)	All	NP
	15-7773	Installation—Oil temperature regulator (LH inboard) (see fig. 26)	All	NP
	15-7773-1	Installation—Oil temperature regulator (RH inboard) (see fig. 27)	All	NP
	15-7772-1	Installation—Oil temperature regulator (RH outboard) (see fig. 27)	All	NP
	15-13867	Installation—Oil temperature regulator (LH outboard)	FO	NP
	15-13867-1	Installation—Oil temperature regulator (LH inboard)	FO	NP
	15-13867-2	Installation—Oil temperature regulator (RH inboard)	FO	NP
	15-13867-3	Installation—Oil temperature regulator (RH outboard)	FO	NP
	15-13867-4	Installation—Oil temperature regulator (LH outboard)	XQ	NP
	15-13867-5	Installation—Oil temperature regulator (LH inboard)	XQ	NP
	15-13867-6	Installation—Oil temperature regulator (RH inboard)	XQ	NP
	15-13867-7	Installation—Oil temperature regulator (RH outboard)	XQ	NP
29-1	2R6697	Regulator Assy—Shutter and thermostat valve (Airesearch) (see T.O. 03-15-17)	FO	1
	17556	Regulator Assy—Oil temperature (Airesearch) (see T.O. 03-15-17)	XQ	1
	2E3078	Regulator Assy—Shutter control valve (Airesearch) (see T.O. 03-15-17)	ZB	1
2	15-7310	Intake Assembly—Oil temperature regulator (LH outboard)	HC	1
	15-7647	Intake Assembly—Oil temperature regulator (LH inboard)	HC	1
	15-7647-1	Intake Assembly—Oil temperature regulator (RH inboard)	HC	1
	15-7944	Intake Assembly—Oil temperature regulator (RH outboard)	HC	1
	15-7310-11	Intake Assembly—Oil temperature regulator (LH outboard)	SO	1
	15-7647-8	Intake Assembly—Oil temperature regulator (LH inboard)	SO	1
	15-7647-9	Intake Assembly—Oil temperature regulator (RH inboard)	SO	1
	15-7944-5	Intake Assembly—Oil temperature regulator (RH outboard)	SO	1
3	15-7772-4	Cushion—Neoprene (outboard)	All	2
	15-7773-4	Cushion—Neoprene (inboard)	All	2
4	3-13725	Strap Assembly	YC	2
5	51-10-34	Bolt—Eye	YC	2
6	1-18895	Filler	YC	2
7	AN365-1032	Nut—Self-locking	YC	2
8	3-13725-7	Strap Assembly	FQ	2
9	51-10-76	Bolt—Eye	FQ	2
10	3-31188	Spring	FQ	2
11	NAS43C4-232	Spacer—Screw and bolt	FQ	2
12	NAS43C6-32	Spacer—Screw and bolt	FQ	2
13	AN970-4	Washer—Flat	FQ	2
14	AN365-428	Nut—Self-locking	FQ	2

PUBLISHED BY AVIALOGS.COM

WING

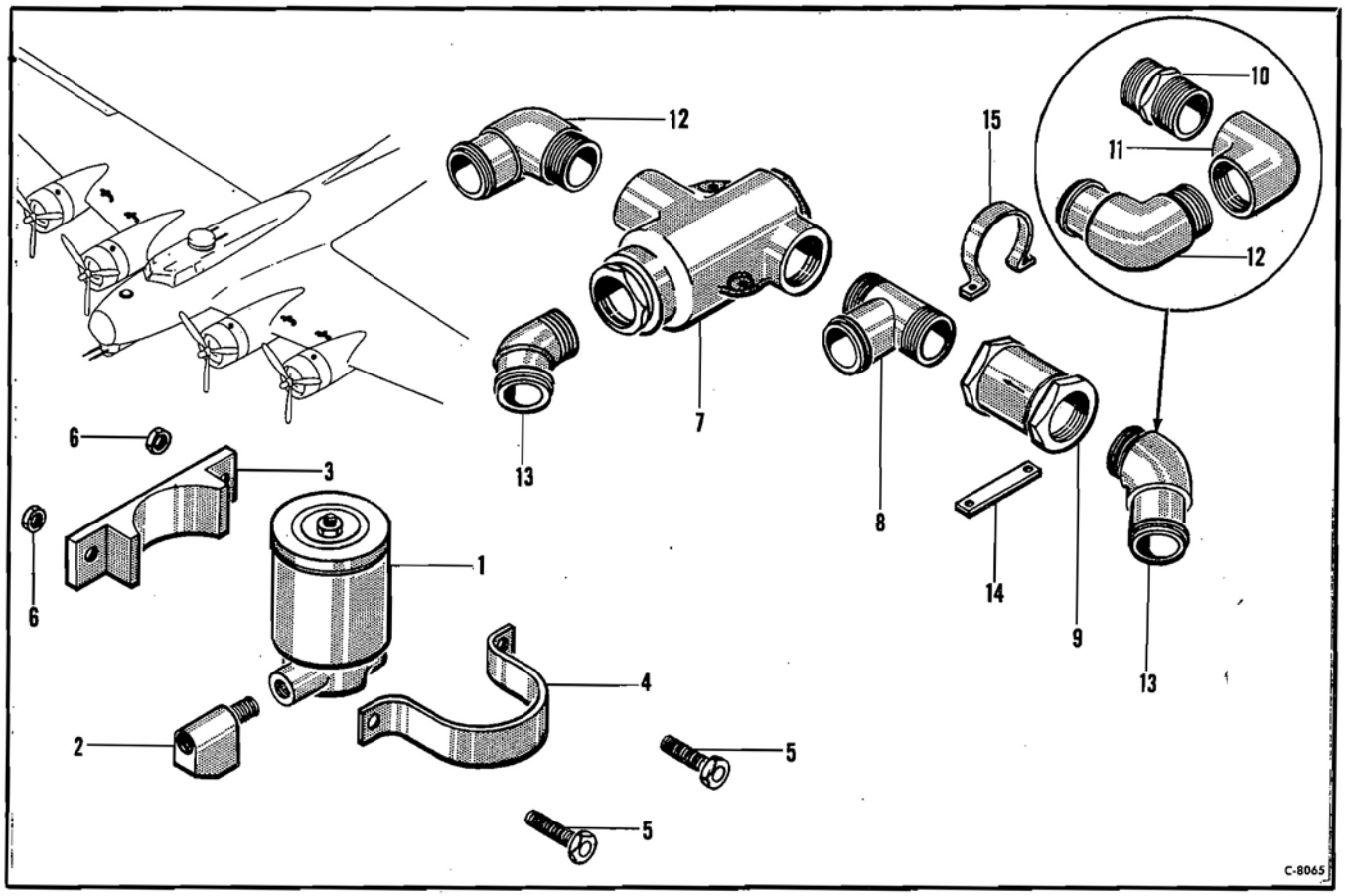

Figure 30—Oil Dilution and Oil Surge Valves

Oil Dilution and Oil Surge Valves

Figure & Index No.	Part Number	1 2 3 4 5 6 7 Nomenclature	Usage Code	Units Per Assy.
		Oil Dilution and Oil Surge Valves		
	53-11715	Installation—Oil dilution valve (outboard) (see fig. 26 and 27)	All	NP
	43-11714-5	Installation—Oil dilution valve (LH inboard) (see fig. 26)	All	NP
	43-11714-6	Installation—Oil dilution valve (RH inboard) (see fig. 27)	All	NP
	53-11715-6	Valve Unit Assembly—Outboard	RA	1
	53-11715-8	Valve Unit Assembly—Outboard	SJ	1
	43-11714-10	Valve Unit Assembly—LH inboard	RA	1
	43-11714-11	Valve Unit Assembly—RH inboard	RA	1
	43-11714-13	Valve Unit Assembly—LH inboard	RJ	1
	43-11714-14	Valve Unit Assembly—RH inboard	RJ	1
	43-11714-15	Valve Unit Assembly—LH inboard	MP	1
	43-11714-16	Valve Unit Assembly—RH inboard	MP	1
30-1	M441M2	Valve Assembly—Oil dilution solenoid (Air Associates) (see T.O. 03-15-17)	RA	1
	UC1070	Valve—Solenoid (United Aircraft) (see AN03-15-24)	SJ	1
2	37A3528	Fitting—Twin restriction	All	1
3	51-163	Support	All	1
4	1-24939	Clamp	All	1
5	AN3-10A	Bolt—Aircraft	All	2
6	AN365-1032	Nut—Self-locking	All	2
	15-12943	Installation—Oil surge valve (nacelle no. 1) (see fig. 26)	All	NP
	15-12944	Installation—Oil surge valve (nacelle no. 2) (see fig. 26)	All	NP
	15-12945	Installation—Oil surge valve (nacelle no. 3) (see fig. 27)	All	NP
	15-12946	Installation—Oil surge valve (nacelle no. 4) (see fig. 27)	All	NP
	9-7230	Valve Assembly—Oil surge (nacelle no. 1)	All	1
	9-7231	Valve Assembly—Oil surge (nacelle no. 2)	All	1
	9-7232	Valve Assembly—Oil surge (nacelle no. 3)	All	1
	15-12946-4	Valve Assembly—Oil surge (nacelle no. 4)	All	1
7	2D6928-4	Valve Assembly—Oil surge (Airesearch) (see T.O. 03-15-17)	All	1
8	1-24222-35	Fitting Assembly	All	1
9	6-1443-2	Valve—Swing check (Parker)	All	1
10	AN911-8	Nipple—Pipe thread (used only on nacelle no. 3 and 4)	All	1
11	AN916-8	Elbow—90 degree internal pipe threads (used only on nacelle no. 3 and 4)	All	1
12	AN842-21	Elbow—90 degree hose (only one required on nacelle no. 1 and 2)	All	2
13	AN844-21	Elbow—45 degree pipe thread hose (only one required on nacelle no. 3 and 4)	All	2
14	3-24532	Block—Check valve support (nacelle no. 1 only)	All	1
	3-22419	Block—Check valve support (nacelle no. 2, 3 and 4)	All	1
15	3-22420	Strap—Check valve support	All	1

RESTRICTED
PUBLISHED BY AVIALOGS.COM

WING

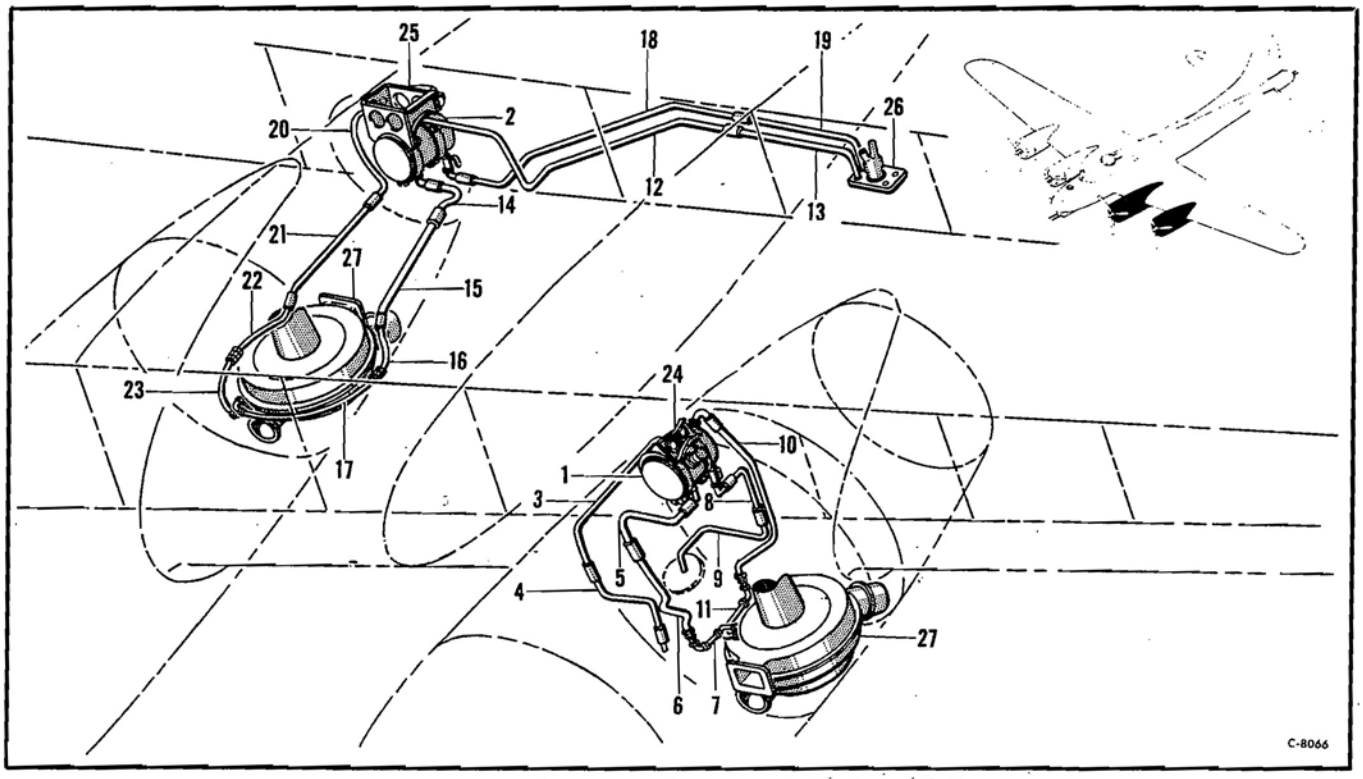

Figure 31—LH Wing Supercharger Lubricating Oil System

LH Wing Supercharger Lubricating Oil System

Figure & Index No.	Part Number	1 2 3 4 5 6 7 Nomenclature	Usage Code	Units Per Assy.
		LH Wing Supercharger Lubricating Oil System		
	55-6088	Installation—Supercharger lubricating oil system	All	NP
31-1	55-6088-440	Tank Assembly—LH outboard (see fig. 38)	All	1
2	55-6088-439	Tank Assembly—LH inboard (see fig. 38)	All	1
3	55-6088-437	Tube Assembly (oil tank vent)	All	1
4	55-6088-60	Tube Assembly (oil tank vent)	All	1
5	55-6088-436	Tube Assembly (oil to supercharger)	R	1
	55-6088-455	Tube Assembly (oil to supercharger)	ZF	1
	55-6088-478	Tube Assembly (oil to supercharger)	DK	1
6	55-6088-48	Tube Assembly (oil to supercharger)	All	1
7	55-6088-402	Tube Assembly (oil to supercharger)	BA	1
	55-6088-444	Tube Assembly (oil to supercharger)	EH	1
8	55-6088-438	Tube Assembly (oil tank drain)	All	1
9	55-6088-71	Tube Assembly (oil tank drain)	All	1
10	55-6088-435	Tube Assembly (oil return)	TA	1
	55-6088-490	Tube Assembly (oil return)	DK	1
11	55-6088-401	Tube Assembly (oil return)	BA	1
	55-6088-448	Tube Assembly (oil return)	EH	1
12	55-6088-432	Tube Assembly (oil tank vent)	All	1
13	55-6088-421	Tube Assembly (oil tank vent)	All	1
14	55-6088-434	Tube Assembly (oil to supercharger)	TA	1
	55-6088-479	Tube Assembly (oil to supercharger)	ZJ	1
	55-6088-452	Tube Assembly (oil to supercharger)	XM	1
15	55-6088-89	Tube Assembly (oil to supercharger)	TA	1
	55-6088-480	Tube Assembly (oil to supercharger)	ZJ	1
	55-6088-451	Tube Assembly (oil to supercharger)	XM	1
16	55-6088-405	Tube Assembly (oil to supercharger)	BA	1
17	55-6088-404	Tube Assembly (oil to supercharger)	BA	1
	55-6088-446	Tube Assembly (oil to supercharger)	ZG	1
	55-6088-476	Tube Assembly (oil to supercharger)	FH	1
	55-6088-481	Tube Assembly (oil to supercharger)	DK	1
18	55-6088-431	Tube Assembly (oil tank drain)	All	1
19	55-6088-419	Tube Assembly (oil tank drain)	All	1
20	55-6088-433	Tube Assembly (oil return)	TA	1
	55-6088-484	Tube Assembly (oil return)	ZJ	1
	55-6088-453	Tube Assembly (oil return)	XM	1
21	55-6088-34	Tube Assembly (oil return)	TA	1
	55-6088-483	Tube Assembly (oil return)	DK	1
22	55-6088-405	Tube Assembly (oil return)	BA	1
23	55-6088-406	Tube Assembly (oil return)	BA	1
	55-6088-447	Tube Assembly (oil return)	ZG	1
	55-6088-477	Tube Assembly (oil return)	FH	1
	55-6088-482	Tube Assembly (oil return)	DK	1
24	55-6162	Installation—Supercharger oil tank support (outboard) (see fig. 15 and 38)	All	NP
25	15-6623	Installation—Supercharger oil tank cradle (inboard) (see fig. 9 and 38)	All	NP
26	3-14249-4	Flange Assembly—Tank vents (see fig. 12)	SC	Ref
27	15-9796	Installation—Supercharger (see fig. 33 and 34)	All	NP

PUBLISHED BY AVIALOGS.COM

WING

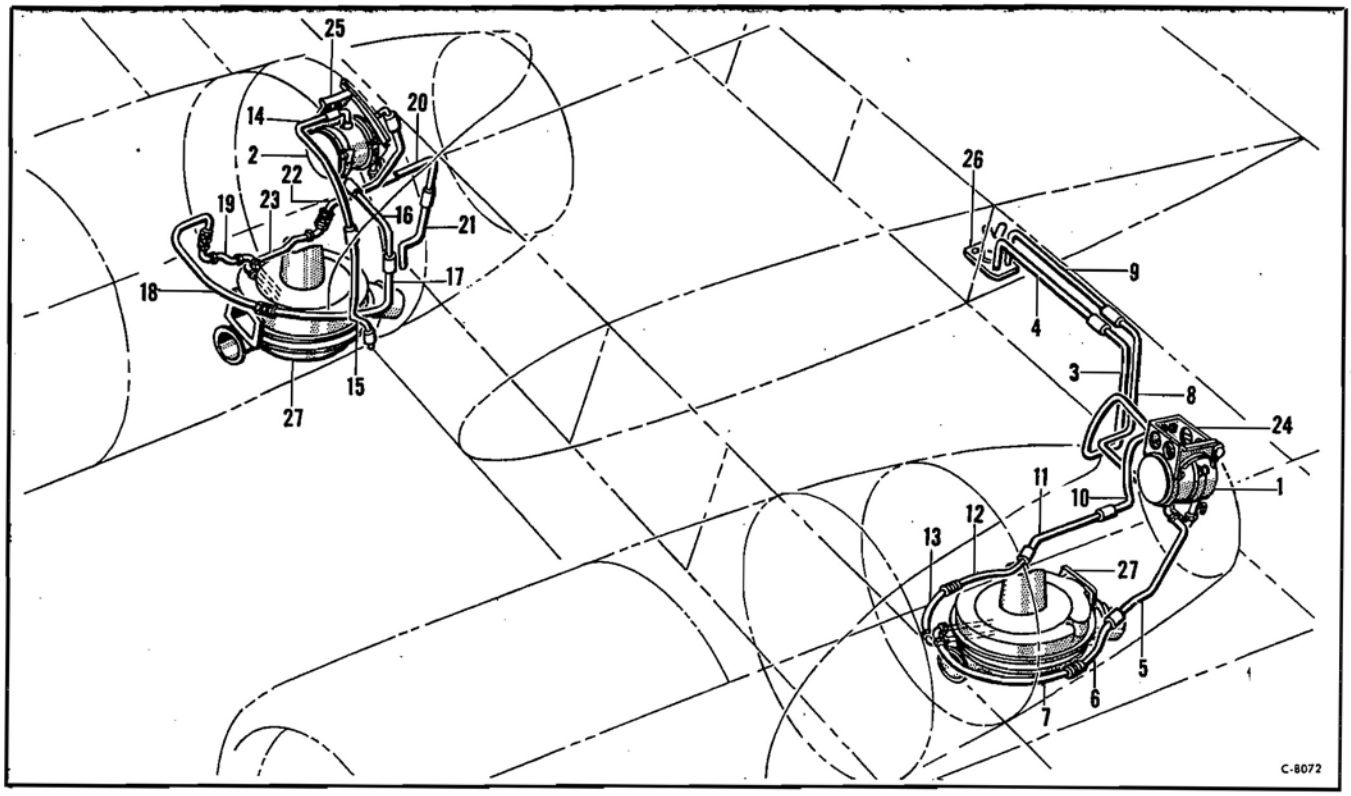

Figure 32—RH Wing Supercharger Lubricating Oil System

RH Wing Supercharger Lubricating Oil System

Figure & Index No.	Part Number	1 2 3 4 5 6 7 Nomenclature	Usage Code	Units Per Assy.
		RH Wing Supercharger Lubricating Oil System		
	55-6088	Installation—Supercharger lubricating oil system	All	NP
32-1	55-6088-441	Tank Assembly—RH inboard (see fig. 38)	All	1
2	55-6088-439	Tank Assembly—RH outboard (see fig. 38)	All	1
3	55-6088-429	Tube Assembly (oil tank vent)	All	1
4	55-6088-422	Tube Assembly (oil tank vent)	All	1
5	55-6088-427	Tube Assembly (oil to supercharger)	TA	1
	55-6088-485	Tube Assembly (oil to supercharger)	DK	1
6	55-6088-405	Tube Assembly (oil to supercharger)	BA	1
7	55-6088-404	Tube Assembly (oil to supercharger)	BA	1
	55-6088-446	Tube Assembly (oil to supercharger)	ZG	1
	55-6088-476	Tube Assembly (oil to supercharger)	FH	1
	55-6088-481	Tube Assembly (oil to supercharger)	DK	1
8	55-6088-428	Tube Assembly (oil tank drain)	All	1
9	55-6088-420	Tube Assembly (oil tank drain)	All	1
10	55-6088-430	Tube Assembly (oil return)	TA	1
	55-6088-487	Tube Assembly (oil return)	ZJ	1
	55-6088-449	Tube Assembly (oil return)	XM	1
11	55-6088-83	Tube Assembly (oil return)	TA	1
	55-6088-486	Tube Assembly (oil return)	ZJ	1
	55-6088-450	Tube Assembly (oil return)	XM	1
12	55-6088-405	Tube Assembly (oil return)	BA	1
13	55-6088-406	Tube Assembly (oil return)	BA	1
	55-6088-447	Tube Assembly (oil return)	ZG	1
	55-6088-477	Tube Assembly (oil return)	FH	1
	55-6088-482	Tube Assembly (oil return)	DK	1
14	55-6088-424	Tube Assembly (oil tank vent)	All	1
15	55-6088-73	Tube Assembly (oil tank vent)	All	1
16	55-6088-425	Tube Assembly (oil to supercharger)	R	1
	55-6088-454	Tube Assembly (oil to supercharger)	ZF	1
	55-6088-489	Tube Assembly (oil to supercharger)	DK	1
17	55-6088-409	Tube Assembly (oil to supercharger)	All	1
18	55-6088-408	Tube Assembly (oil to supercharger)	All	1
19	55-6088-402	Tube Assembly (oil to supercharger)	BA	1
	55-6088-444	Tube Assembly (oil to supercharger)	EH	1
20	55-6088-426	Tube Assembly (oil tank drain)	All	1
21	55-6088-54	Tube Assembly (oil tank drain)	All	1
22	55-6088-423	Tube Assembly (oil return)	TA	1
	55-6088-488	Tube Assembly (oil return)	DK	1
23	55-6088-407	Tube Assembly (oil return)	BA	1
	55-6088-445	Tube Assembly (oil return)	EH	1
24	15-6623-1	Installation—Supercharger oil tank cradle (inboard) (see fig. 9 and 38)	All	NP
25	55-6162-1	Installation—Supercharger oil tank support (outboard) (see fig. 15 and 38)	All	NP
26	3-14249-5	Flange Assembly—Tank vents (see fig. 12)	SC	Ref
27	15-9796	Installation—Supercharger (see fig. 33 and 34)	All	NP

RESTRICTED
PUBLISHED BY AVIALOGS.COM

WING

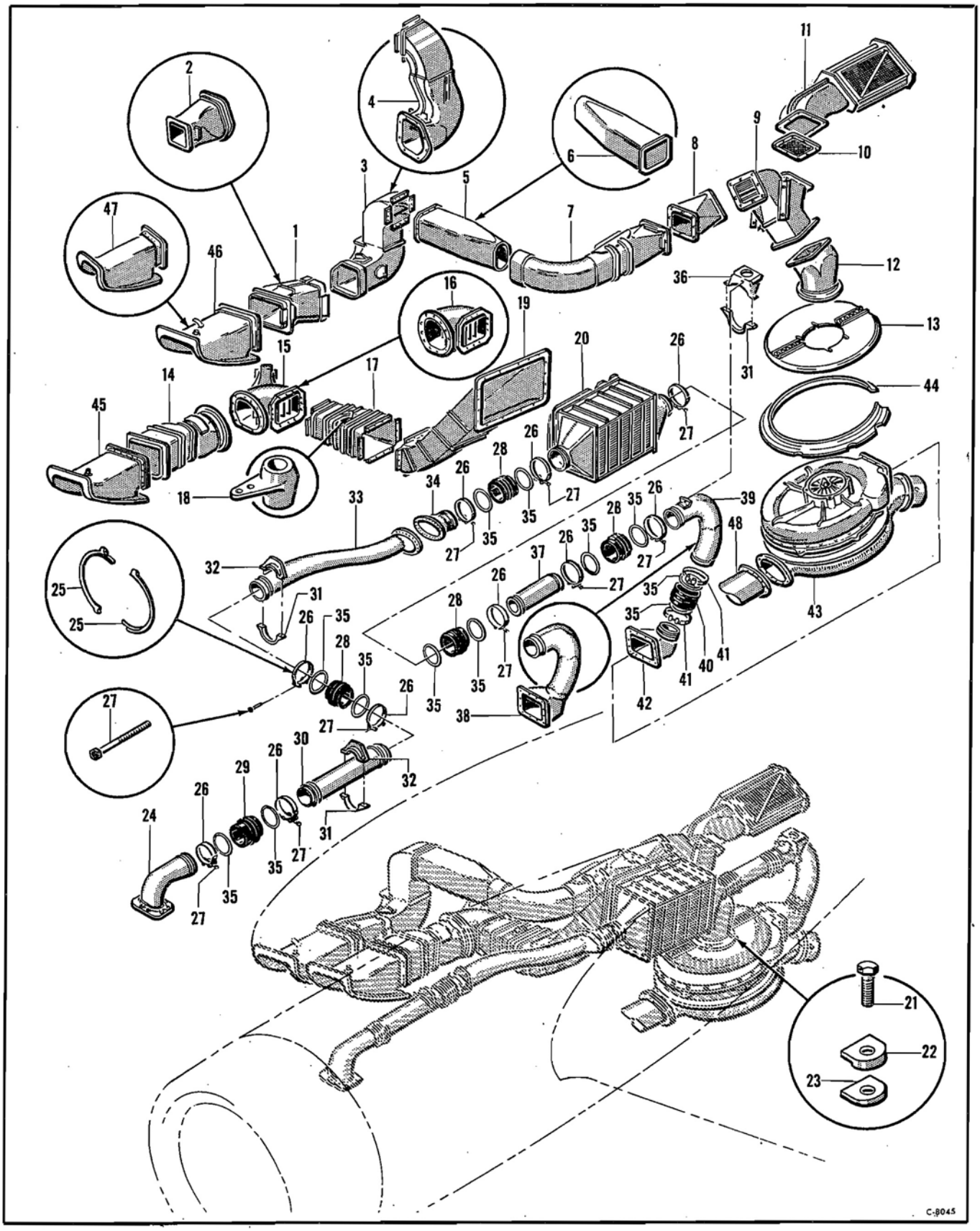

Figure 33—Inboard Supercharger System

PUBLISHED BY AVIALOGS.COM

WING

Inboard Supercharger System

Figure & Index No.	Part Number	1 2 3 4 5 6 7 Nomenclature	Usage Code	Units Per Assy.
		Inboard Supercharger System	All	NP
	15-9796	Installation—Supercharger (see fig. 17)	All	NP
	15-9771	Installation—Air duct inboard (LH)	All	NP
	15-9771-1	Installation—Air duct inboard (RH)	All	1
33-1	55-6700	Duct Assembly—Carburetor cabin air (LH inboard)	XM	1
	55-6700-401	Duct Assembly—Carburetor cabin air (RH inboard)	QB	1
2	6-7919-7	Duct Assembly—RH air (inboard)	All	1
3	15-6701	Duct Assembly—Carburetor and cabin air (LH inboard)	XM	1
	15-6701-20	Duct Assembly—Carburetor and cabin air (RH inboard)	QB	1
4	9-3681	Duct Assembly—Air intake (RH inboard)	All	1
5	7-1642	Duct Assembly—Carburetor air (LH inboard)	XM	1
	7-1642-13	Duct Assembly—Carburetor air (RH inboard)	QB	1
6	7-1642-9	Duct Assembly—Carburetor air (RH inboard)	All	1
7	65-6093	Elbow Assembly—Air intake (LH inboard) (see fig. 36)	All	1
	65-6093-1	Elbow Assembly—Air intake (RH inboard) (see fig. 36)	All	1
8	9-5305	Adapter Assembly—Air duct (LH inboard)	All	1
	9-5305-1	Adapter Assembly—Air duct (RH inboard)	X	1
9	15-9784-12	Valve Assembly—Air filter (LH inboard) (see fig. 36)	RG	1
	15-9784-21	Valve Assembly—Air filter (LH inboard) (see fig. 36)	SI	1
	15-9784-28	Valve Assembly—Air filter (LH inboard) (see fig. 36)	X	1
	15-9784-13	Valve Assembly—Air filter (RH inboard) (see fig. 36)	RG	1
	15-9784-22	Valve Assembly—Air filter (RH inboard) (see fig. 36)	SI	1
	15-9784-29	Valve Assembly—Air filter (RH inboard) (see fig. 36)	All	1
10	3-18502	Screen Assembly—Supercharger inlet	All	NP
11	15-9790	Installation—Inboard filter frame (LH) (see fig. 35)	All	NP
	15-9790-1	Installation—Inboard filter frame (RH) (see fig. 35)	FD	1
12	9-5212	Elbow Assembly—Carburetor air duct	UQ	1
	9-5212-4	Elbow Assembly—Carburetor air duct	UQ	1
13	9-10675	Cover Assembly—Supercharger (LH inboard)	UQ	1
	9-10675-1	Cover Assembly—Supercharger (RH inboard)	All	1
14	49-3022	Header Assembly—Cooling air duct (LH inboard)	All	1
	49-3022-1	Header Assembly—Cooling air duct (RH inboard)	QB	1
15	79-3021	Elbow Assembly—Cooling air duct (LH inboard)	XM	1
16	79-3021-737	Elbow Assembly—Cooling air duct (LH inboard)	All	1
	79-3021-1	Elbow Assembly—Cooling air duct (RH inboard)	All	1
17	55-6339	Duct Assembly—Cooling air (LH inboard)	All	1
	55-6339-1	Duct Assembly—Cooling air (RH inboard)	All	2
18	1-17588	Lever—Engine control	All	1
19	55-6089	Expander Assembly—Cooling air duct (LH inboard)	All	1
	55-6089-1	Expander Assembly—Cooling air duct (RH inboard)	All	NP
20	58-1077	Installation—Supercharger intercooler inboard (LH) (see fig. 35)	All	NP
	58-1077-1	Installation—Supercharger intercooler inboard (RH) (see fig. 35)	All	4
21	21-6671-14H3	Bolt—Drilled head	All	4
22	41-8261	Lug—Mixing box	All	4
23	15-9771-4	Shim	All	NP
	65-5975	Installation—Pressure duct inboard (LH)	All	NP
	65-5975-1	Installation—Pressure duct inboard (RH)	All	1
24	9-3080-22	Elbow Assembly—Carburetor pressure duct	PC	20
25	41-8374	Ring Assembly—Air duct	SP	10
26	6-16886	Clamp Assembly—Induction system	All	1
27	3-25383	Bolt—1-4 28 special	All	1
	AN365-428	Nut—Self-locking	All	4
28	6-8072	Hose—Corrugated air		1
29	6-8072-2	Hose—Corrugated air (Used on all models prior to AF43-39349)		1
	6-20671	Hose—Corrugated air (Used on AF43-39349 and all subsequent models		1
30	65-5975-410	Duct Assembly—Weld (LH)	E	1
	65-5975-519	Duct Assembly—Weld (LH)	ZE	1
	65-5975-411	Duct Assembly—Weld (RH)	E	1
	65-5975-520	Duct Assembly—Weld (RH)	ZE	1
31	41-8435	Clamp Assembly—Air duct	All	3
32	41-8461	Collar Assembly—Duct support	All	2
33	65-5975-517	Duct Assembly—Weld (LH inboard)	All	1
	65-5975-518	Duct Assembly—Weld (RH inboard)	All	1
34	6-7741	Connector Assembly—Pressure duct (LH inboard)	All	1
	6-7741-1	Connector Assembly—Pressure duct (RH inboard)	All	1
35	3-11717	Ring—Hose	PC	12
36	6-9596	Bracket Assembly—Pressure duct	All	1
37	3-13913	Duct—Pressure	All	1
38	65-5975-511	Duct Assembly—Weld (LH)	PC	1
	65-5975-512	Duct Assembly—Weld (RH)	PC	1
	65-5975-614	Duct Assembly—Weld (LH)	SP	1
	65-5975-615	Duct Assembly—Weld (RH)	SP	1
39	65-5975-610	Duct Assembly (LH)	SP	1
	65-5975-611	Duct Assembly (RH)	SP	1
40	6-8072	Hose—Corrugated air (LH only)	SP	1
41	6-16886	Clamp Assembly—Induction system	All	2
	3-25388	Bolt—1-4 28 special	All	1
	AN365-428	Nut—Self-locking	All	1
42	6-18328	Adapter Assembly—Pressure duct (LH)	SP	1
	6-18328-1	Adapter Assembly—Pressure duct (RH)	SP	1
43	4868827	Supercharger Assembly GFE	BA	2
	WW8456556	Supercharger Assembly GFE	EH	2
	6-7907	Installation—Supercharger seal inboard (LH)	All	NP
	6-7907-2	Installation—Supercharger seal inboard (RH)	All	NP
44	6-7907-9	Seal—Inboard supercharger (LH)	E	1
	6-7907-10	Seal—Inboard supercharger (RH)	E	1
	6-7907-10	Seal—Inboard supercharger	ZE	1
	74-1831-600	Nose Assembly (LH) (see fig. 11)	QB	Ref
	74-1831-624	Nose Assembly (LH) (see fig. 11)	XM	Ref
	74-1831-601	Nose Assembly (RH) (see fig. 11)	QB	Ref
	74-1831-625	Nose Assembly (RH) (see fig. 11)	XM	Ref
	64-1680	Installation—Carburetor and intercooler intake (LH) (see fig. 11)	All	NP
	64-1680-1	Installation—Carburetor and intercooler intake (RH) (see fig. 11)	All	NP
45	64-1680-500	Intake Assembly—Weld (LH) (see fig. 11)	All	Ref
	64-1680-503	Intake Assembly—Weld (RH) (see fig. 11)	All	Ref
46	64-1680-511	Intake Assembly—Weld (LH) (see fig. 11)	QB	Ref
	64-1680-524	Intake Assembly—Weld (LH) (see fig. 11)	XM	Ref
	64-1680-519	Intake Assembly—Weld (RH) (see fig. 11)	QB	Ref
47	64-1680-507	Intake Assembly—Weld (RH) (see fig. 11)	QB	Ref
48		Tailpipe Assembly (see fig. 17)		

PUBLISHED BY AVIALOGS.COM

WING

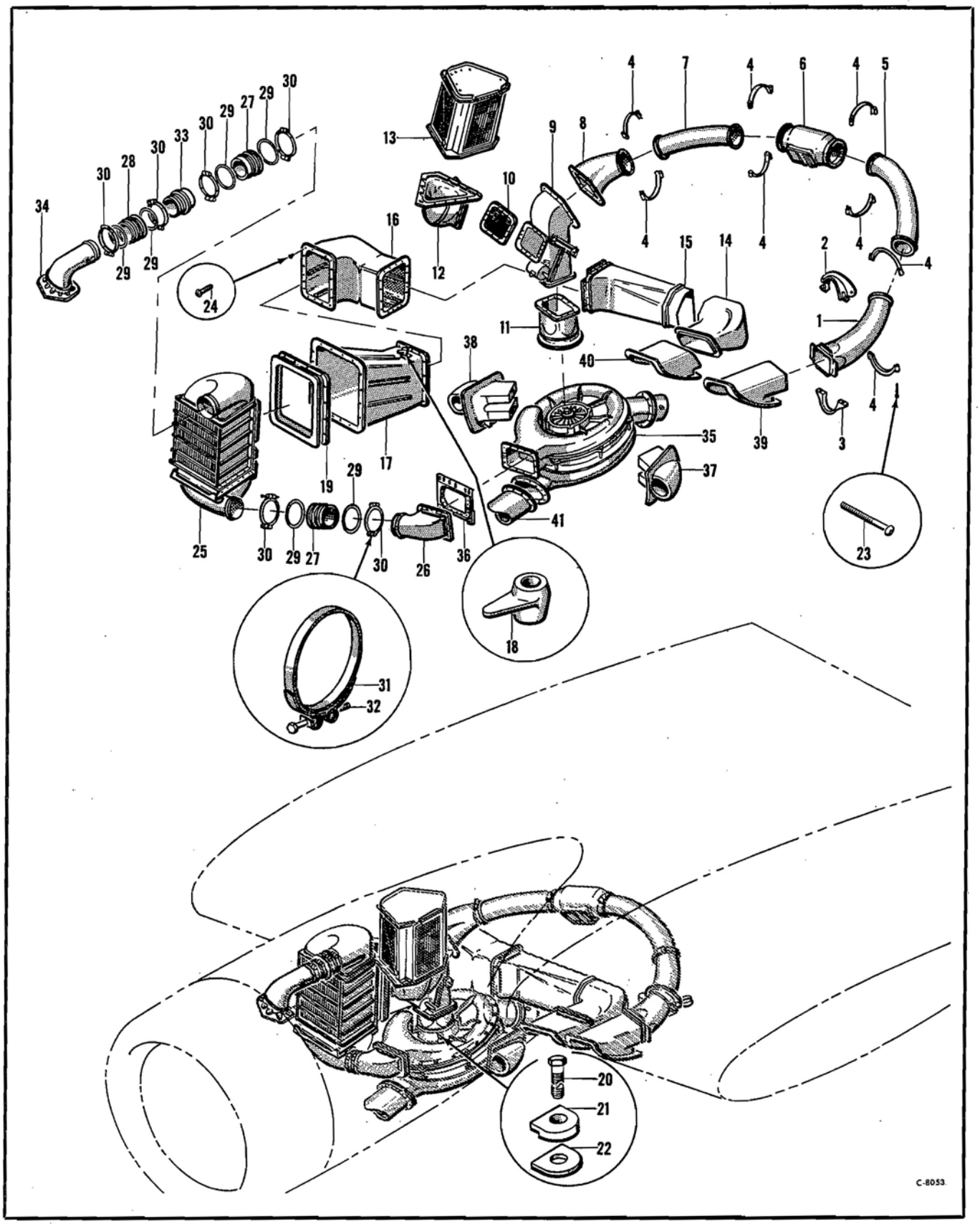

Figure 34— Outboard Supercharger System

PUBLISHED BY AVIALOGS.COM

WING

Figure 34—Outboard Supercharger System

Figure & Index No.	Part Number	1 2 3 4 5 6 7 Nomenclature	Usage Code	Units Per Assy.
		Outboard Supercharger System		
	15-9796	Installation—Supercharger (see fig. 17)	All	NP
	15-9770	Installation—Outboard air duct (LH)	All	NP
	15-9770-1	Installation—Outboard air duct (RH)	All	NP
34-1	6-7998-8	Duct Assembly—Cold air intake (LH outboard)	All	1
	6-7998-9	Duct Assembly—Cold air intake (RH outboard)	All	1
	6-7841	Installation—Air duct bracket (LH outboard)	All	NP
	6-7841-1	Installation—Air duct bracket (RH outboard)	All	NP
2	6-7841-2	Bracket Assembly—Air duct (LH outboard)	All	1
	6-7841-3	Bracket Assembly—Air duct (RH outboard)	All	1
3	41-8753	Clamp Assembly—Air duct	All	1
4	41-9013	Clamp Assembly—Duct half	All	8
5	6-7999	Duct Assembly—Air intake (LH outboard)	EA	1
	6-7999-6	Duct Assembly—Air intake (LH outboard)	QH	1
	6-7999-1	Duct Assembly—Air intake (RH outboard)	EA	1
	6-7999-7	Duct Assembly—Air intake (RH outboard)	QH	1
6	9-2988	Valve Assembly—Relief outboard (see fig. 36)	All	1
7	6-7993	Duct Assembly—Outboard air intake (LH)	EA	1
	6-7993-10	Duct Assembly—Outboard air intake (LH)	QH	1
	6-7993-1	Duct Assembly—Outboard air intake (RH)	EA	1
	6-7993-11	Duct Assembly—Outboard air intake (RH)	QH	1
8	9-5213	Duct Assembly—Outboard supercharger	All	1
9	15-9784-12	Valve Assembly—Air filter (LH outboard) (see fig. 36)	X	1
	15-9784-21	Valve Assembly—Air filter (LH outboard) (see fig. 36)	RG	1
	15-9784-28	Valve Assembly—Air filter (LH outboard) (see fig. 36)	SI	1
	15-9784-13	Valve Assembly—Air filter (RH outboard) (see fig. 36)	X	1
	15-9784-22	Valve Assembly—Air filter (RH outboard) (see fig. 36)	RG	1
	15-9784-29	Valve Assembly—Air filter (RH outboard) (see fig. 36)	SI	1
10	3-18502	Screen Assembly—Supercharger inlet	All	1
11	9-5211	Duct Assembly—Outboard supercharger	All	1
12	15-9785-12	Duct Assembly—Outboard supercharger (LH outboard)	All	1
	15-9785-13	Duct Assembly—Outboard supercharger (RH outboard)	All	1
13	15-9795	Installation—Outboard filter frame (LH) (see fig. 35)	All	NP
	15-9795-1	Installation—Outboard filter frame (RH) (see fig. 35)	All	NP
14	49-3030	Elbow Assembly—Intercooler duct (LH)	All	1
	49-3030-1	Elbow Assembly—Intercooler duct (RH)	All	1
15	47-1343-23	Duct Assembly—Outboard intercooler (LH)	All	1
	47-1343-24	Duct Assembly—Outboard intercooler (RH)	All	1
16	49-3029	Duct Assembly—Intercooler air (LH outboard)	All	1
	49-3029-1	Duct Assembly—Intercooler air (RH outboard)	All	1
17	9-3124-33	Duct Assembly—Cooling air (LH outboard)	All	1
	9-3124-34	Duct Assembly—Cooling air (RH outboard)	All	1
18	1-17588-3	Lever	All	2
19	57-1341	Connector Assembly—Flexible	All	1
20	21-6671-14H3	Bolt—Drilled head	All	4
21	41-8261	Lug—Mixing box	All	4
22	15-9770-5	Shim	All	4
23	AN520-10R36	Screw—Round head	All	8
	AN365-1032	Nut—Self-locking	All	8
24	AN520-10R8	Screw—Round head	All	16
	AN365-1032	Nut—Self-locking	All	16
25	15-7654	Installation—Outboard nacelle intercooler (LH) (see fig. 35)	All	NP
	15-7654-1	Installation—Outboard nacelle intercooler (RH) (see fig. 35)	All	NP
	55-5976	Installation—Outboard pressure duct (LH)	All	NP
	55-5976-1	Installation—Outboard pressure duct (RH)	All	NP
26	6-8463	Elbow Assembly—Pressure duct (LH)	All	1
	6-8463-1	Elbow Assembly—Pressure duct (RH)	All	1
27	6-8072	Hose—Corrugated air	All	2
28	6-8072-2	Hose—Corrugated air	All	1
29	3-11717	Ring—Hose	All	6
30	41-8374	Ring Assembly—Air duct	PC	12
31	6-16886	Clamp Assembly—Induction system	SP	6
32	3-25383	Bolt—1-4 28 special	All	1
	AN365-428	Nut—Self-locking	All	1
33	41-8448	Duct Assembly—Carburetor	All	1
34	9-3080-22	Elbow Assembly—Carburetor pressure duct	All	1
35	4868827	Supercharger Assembly GFE	BA	2
	WW8456556	Supercharger Assembly GFE	EH	2
36	49-3056-408	Seal—Outboard nacelle station 20	All	1
	15-6531	Installation—Supercharger cooling scoop (LH)	All	NP
	15-6531-1	Installation—Supercharger cooling scoop (RH)	All	NP
37	15-6531-2	Scoop Assembly (LH)	All	1
38	15-6531-3	Scoop Assembly (RH)	All	1
	15-7476-66	Nose Assembly—Station 15-19 (LH) (see fig. 11)	B	Ref
	15-7476-80	Nose Assembly—Station 15-19 (LH) (see fig. 11)	BE	Ref
	15-7476-67	Nose Assembly—Station 15-19 (RH) (see fig. 11)	B	Ref
	15-7476-81	Nose Assembly—Station 15-19 (RH) (see fig. 11)	BE	Ref
	54-1618	Installation—Carburetor & intercooler intake (outboard)	All	NP
	54-1618-1	Installation—Carburetor & intercooler intake (outboard)	All	NP
39	54-1618-410	Intake Assembly—LH (used on 54-1618)	All	1
	54-1618-411	Intake Assembly—RH (used on 54-1618-1)	All	1
40	54-1618-418	Intake Assembly—LH (used on 54-1618)	All	1
	54-1618-419	Intake Assembly—RH (used on 54-1618-1)	All	1
41	NO NUMBER	Tailpipe Assembly (see fig. 17)		NP

PUBLISHED BY AVIALOGS.COM

WING

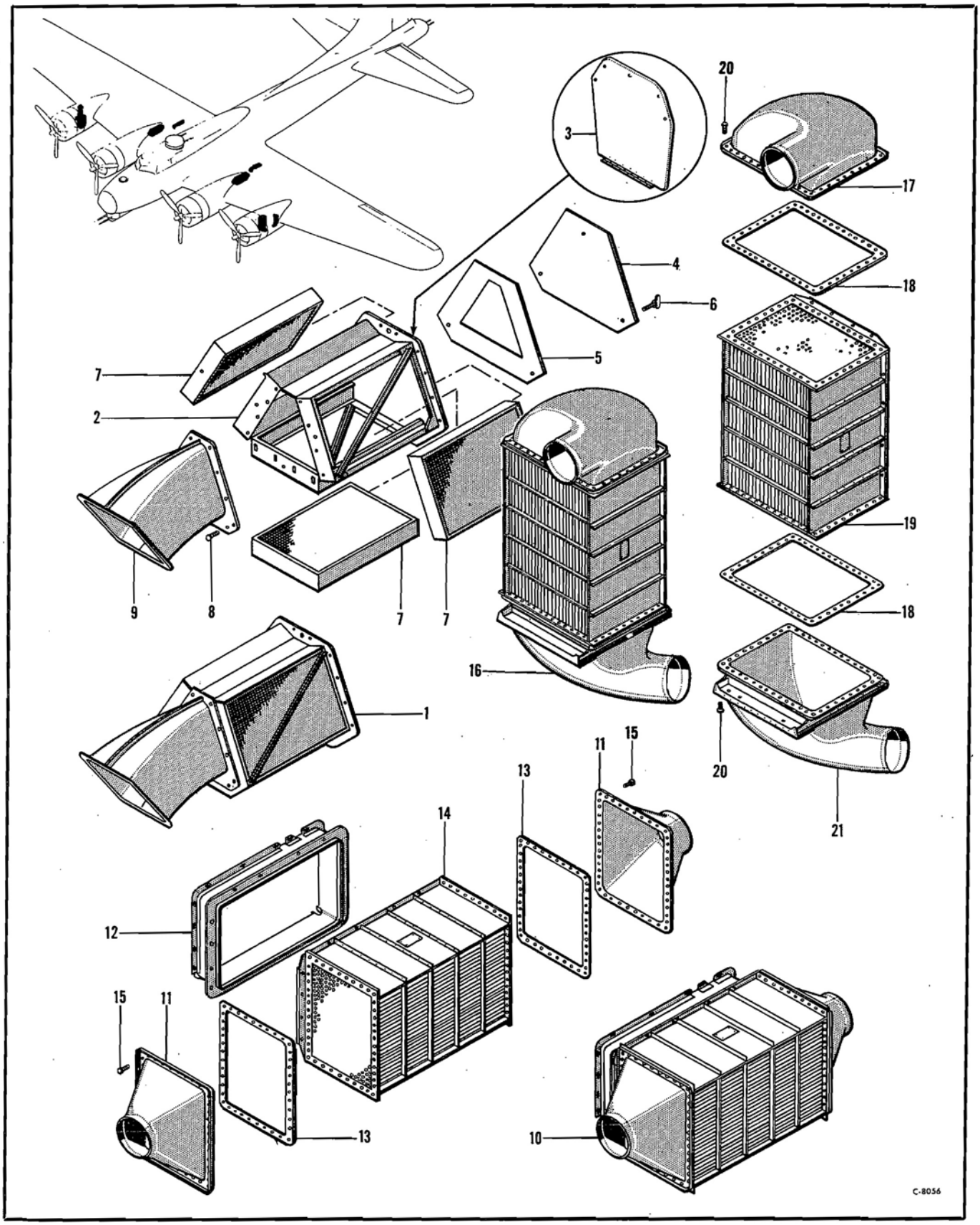

Figure 35—Supercharger, Air Filter, and Intercooler

RESTRICTED
PUBLISHED BY AVIALOGS.COM

WING

Supercharger Air Filter and Intercooler

Figure & Index No.	Part Number	1 2 3 4 5 6 7 Nomenclature	Usage Code	Units Per Assy.
		Supercharger Air Filter and Intercooler		
35-1	15-9795	Installation—Outboard filter frame (LH) (see fig. 34)	All	NP
	15-9795-1	Installation—Outboard filter frame (RH) (see fig. 34)	All	NP
	15-9790	Installation—Inboard filter frame (LH) (see fig. 33)	All	NP
	15-9790-1	Installation—Inboard filter frame (RH) (see fig. 33)	All	NP
2	15-9783-10	Frame Assembly—Filter	KA	1
	15-9783-12	Frame Assembly—Filter	NI	1
3	9-5302-6	Relief Valve Assembly (used on 15-9783-10)	KA	1
	6-14189	Cover Assembly—Air filter	NI	1
4	6-14189-1	Cover	NI	1
5	6-14201	Gasket—Air filter	NI	1
6	3-20745	Screw Assembly—1-4 28 wing	All	3
7	56B446	Filter Assembly—Carb air (American Air Filter Co.)	All	3
8	AN3-4A	Bolt—Aircraft (used on 15-9795 and 15-9795-1)	All	16
	AN960-10	Washer—Plain (used on 15-9795 and 15-9795-1)	All	17
	AN365-1032	Nut—Self-locking (used on 15-9795 and 15-9795-1)	All	18
9	15-9787-3	Duct Assembly—Inboard supercharger	All	1
	6-14101	Gasket	All	1
	58-1077	Installation—Inboard supercharger intercooler (LH) (see fig. 33)	All	NP
	58-1077-1	Installation—Inboard supercharger intercooler (RH) (see fig. 33)	All	NP
10	58-1077-506	Intercooler Assembly (LH inboard)	QB	1
	58-1077-508	Intercooler Assembly (LH inboard)	XM	1
	58-1077-507	Intercooler Assembly (RH inboard)	QB	1
	58-1077-509	Intercooler Assembly (RH inboard)	XM	1
11	6-7733	Header Assembly—Intercooler (LH inboard)	All	2
	6-7733-1	Header Assembly—Intercooler (RH inboard)	All	2
12	59-2990	Connector Assembly—Flexible (LH inboard)	All	1
	59-2990-1	Connector Assembly—Flexible (RH inboard)	All	1
13	41-8265	Gasket—Intercooler	All	2
14	1E757	Unit—Intercooler (Airesearch)	All	1
15	AN3-5A	Bolt—Aircraft	All	34
	AN3-6A	Bolt—Aircraft	All	66
	AN365-1032	Nut—Self-locking	All	124
16	15-7654	Installation—Outboard nacelle intercooler (LH) (see fig. 34)	All	NP
	15-7654-1	Installation—Outboard nacelle intercooler (RH) (see fig. 34)	All	NP
	15-7654-3	Intercooler Assembly—Outboard nacelle (LH)	All	1
	15-7654-4	Intercooler Assembly—Outboard nacelle (RH)	All	1
17	56-7789-504	Elbow Assembly—Pressure duct (LH outboard)	E	1
	56-7789-506	Elbow Assembly—Pressure duct (LH outboard)	ZE	1
	56-7789-505	Elbow Assembly—Pressure duct (RH outboard)	E	1
	56-7789-507	Elbow Assembly—Pressure duct (RH outboard)	ZE	1
18	41-8265	Gasket—Intercooler	All	2
19	1E757	Unit—Intercooler (Airesearch)	All	1
20	AN3-5A	Bolt—Aircraft	All	26
	AN3-6A	Bolt—Aircraft	All	66
	AN365-1032	Nut—Self-locking	All	92
21	6-7798	Header Assembly—Pressure duct (LH outboard)	All	1
	6-7798-1	Header Assembly—Pressure duct (RH outboard)	All	1

PUBLISHED BY AVIALOGS.COM

WING

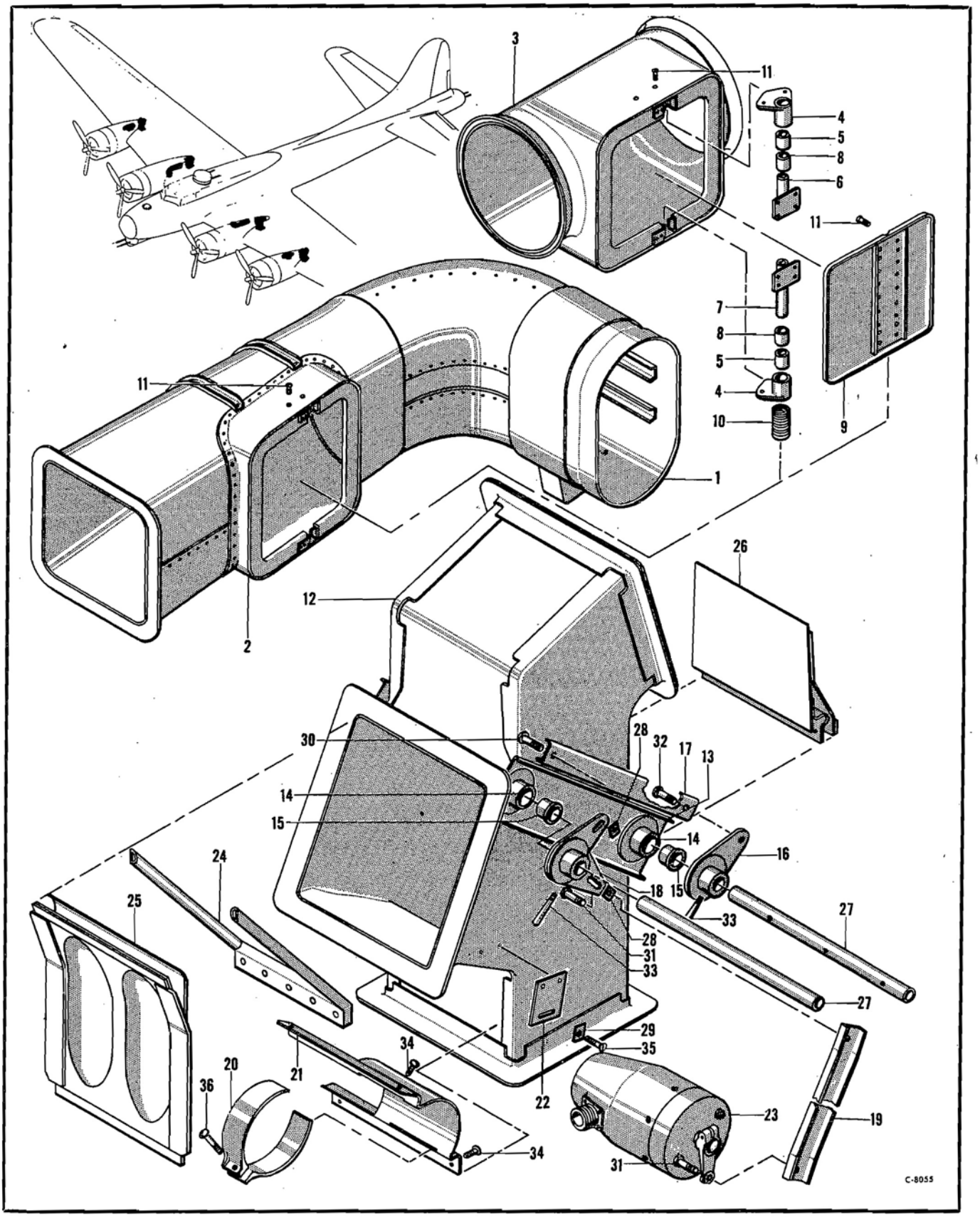

Figure 36—Supercharger Air Filter Relief Valve Assemblies

PUBLISHED BY AVIALOGS.COM

WING

Supercharger Air Filter Relief Valve Assemblies

Figure & Index No.	Part Number	1 2 3 4 5 6 7 Nomenclature	Usage Code	Units Per Assy.
		Supercharger Air Filter Relief Valve Assemblies		
	65-6093	Elbow Assembly—Air intake (LH inboard) (see fig. 33)	All	Ref
	65-6093-1	Elbow Assembly—Air intake (RH inboard) (see fig. 33)	All	Ref
	9-2988	Valve Assembly—Relief outboard (see fig. 34)	All	Ref
36-1	65-6093-513	Duct Assembly (used on 65-6093 and 65-6093-1)	All	1
2	6-7927	Housing Assembly—Relief valve inboard	All	1
3	15-6079	Housing Assembly—Relief valve outboard (used on 9-2988)	All	1
	41-8756	Bushing Assembly—Relief valve	All	2
4	41-8755	Support—Bushing	All	1
5	A507-4	Bushing—Oilite (Chrysler Corp.)	All	1
6	41-8752	Shaft Assembly—Relief valve	All	1
7	41-8805	Shaft Assembly—Relief valve	All	1
8	9-2988-4	Spacer	All	2
9	41-8826	Flap Assembly—Relief valve	All	1
10	41-8806	Spring—Relief valve	All	1
11	AN520-10R7	Screw—Round head	All	12
	AN365-1032	Nut—Self-locking	All	12
	15-9784-12	Valve Assembly—Air filter (LH) (see fig. 33 and 34)	X	Ref
	15-9784-21	Valve Assembly—Air filter (LH) (see fig. 33 and 34)	RG	Ref
	15-9784-28	Valve Assembly—Air filter (LH) (see fig. 33 and 34)	SI	Ref
	15-9784-13	Valve Assembly—Air filter (RH) (see fig. 33 and 34)	X	Ref
	15-9784-22	Valve Assembly—Air filter (RH) (see fig. 33 and 34)	RG	Ref
	15-9784-29	Valve Assembly—Air filter (RH) (see fig. 33 and 34)	SI	Ref
12	15-9784-2	Duct Assembly—Air filter	All	1
	15-9784-10	Channel Assembly	All	1
	15-9784-11	Channel Assembly	All	1
13	3-16969	Channel—Filter valve (used on 15-9784-10)	All	1
	3-16969-1	Channel—Filter valve (used on 15-9784-11)	All	1
	1-25565	Flange Assembly—Filter valve	All	2
14	3-16971	Flange—Filter valve	All	1
15	F609-3	Bushing—Oilite (Chrysler Corp.)	All	1
16	3-16975	Lever Assembly—Filter valve	All	1
17	1-25564	Link Assembly—Filter valve	All	1
18	3-16985	Crank Assembly—Filter valve (LH)	All	1
	3-16985-1	Crank Assembly—Filter valve (RH)	All	1
19	3-16986	Link Assembly—Filter valve	All	1
	15-9784-9	Support Assembly—Motor (used on 15-9784-12 and -13)	X	1
	15-9784-19	Support Assembly—Motor (used on 15-9784-21, -22, -28 and -29)	SG	1
20	3-16989	Clamp—Filter valve (used on 15-9784-9)	X	2
	3-16989-1	Clamp—Filter valve (used on 15-9784-19)	SG	2
21	6-12617	Cradle—Valve motor	All	1
22	1-27200	Clip—Filter valve	All	1
23	AYLC5091	Motor (Barber-Colman Co.)	All	1
24	6-14432	Seal Assembly—Air filter valve	All	1
25	6-12610-3	Door Assembly—Filter valve (used on 15-9784-12, -13, -21 and -22)	NA	1
	6-12610-10	Door Assembly—Filter valve (used on 15-9784-28 and -29)	SI	1
	6-12613-6	Door Assembly—Filter valve	All	1
26	6-12613-7	Spotweld Assembly	All	1
27	1-25571	Shaft (used on 15-9784-12 and -13)	X	2
	1-25571-1	Shaft (used on 15-9784-21, -22, -28 and -29)	SG	2
28	1-18380-6-191	Washer	All	2
29	1-18380-8-173	Washer	All	1
30	AN3-7	Bolt—Aircraft	All	1
	AN960-10	Washer—Plain	All	2
	AN310-3	Nut—Aircraft castle	All	2
31	AN23-12	Bolt—Clevis	All	2
	AN960-10	Washer—Plain	All	4
	AN320-3	Nut—Aircraft shear	All	2
32	AN3-6	Bolt—Aircraft	All	1
	AN960-10	Washer—Plain	All	2
	AN310-3	Nut—Aircraft castle	All	1
33	AN386-1-8A	Pin—Threaded taper	All	2
	AN975-3	Washer—Taper pin	All	2
	AN364-1032	Nut—Self-locking	All	2
34	NAS221-8	Screw—Brazier head	All	4
35	AN515-8R10	Screw—Round head	All	1
	AN935-8L	Washer—Medium spring lock	All	1
36	AN520-416R16	Screw—Round head	All	1
	AN960D416	Washer—Plain	All	1
	AN365-428	Nut—Self-locking	All	1

PUBLISHED BY AVIALOGS.COM

WING

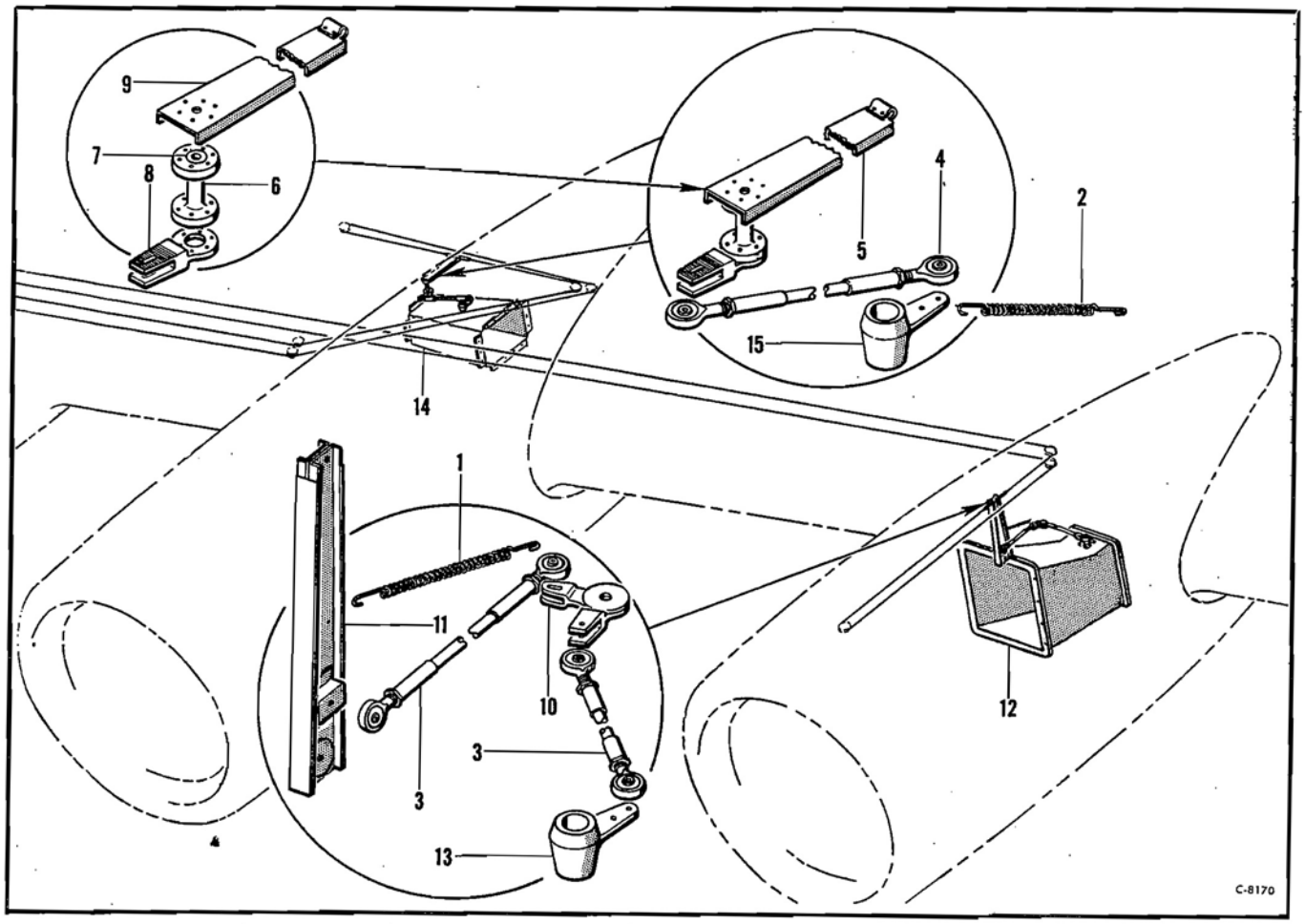

Figure 37—Intercooler Temperature Control

Intercooler Temperature Control

Figure & Index No.	Part Number	1 2 3 4 5 6 7 Nomenclature	Usage Code	Units Per Assy.
		Intercooler Temperature Control		
	15-7038	Installation—Intercooler temperature control	All	NP
	3-13502	Installation—Intercooler spring (LH outboard)	All	NP
	6-9228	Installation—Intercooler spring (RH outboard)	All	NP
37-1	1-18106	Spring—Intercooler shutter (LH outboard)	All	1
	1-18208	Spring—Intercooler shutter (RH outboard)	All	1
	3-13594	Installation—Intercooler spring (LH inboard)	All	NP
	3-13594-1	Installation—Intercooler spring (RH inboard)	All	NP
2	1-17568	Spring—Intercooler shutter	All	1
3	BAC1861-23-80	Rod Assembly (LH outboard)	All	2
	BAC1861-23-82	Rod Assembly (RH outboard)	All	1
	BAC1861-24-120	Rod Assembly (RH outboard)	All	1
4	BAC1861-24-170	Rod Assembly (inboard)	All	2
	15-6343	Installation—Intercooler temperature control bracket (see fig. 9)	All	NP
	15-6343-1	Installation—Intercooler temperature control bracket (see fig. 9)	All	NP
5	3-12085	Crank Assembly—Intercooler control (LH)	All	1
	3-12085-1	Crank Assembly—Intercooler control (RH)	All	1
6	3-12085-3	Hub Assembly—Intercooler control	All	1
7	AN201K4A	Bearing—Ball	All	2
8	51-762-4	Lever—Serrated control	All	1
9	3-20422	Lever—Control	All	1
	9-3127	Installation—Intercooler temperature control bracket (LH outboard) (see fig. 15)	All	NP
	49-3129	Installation—Intercooler temperature control bracket (RH outboard) (see fig. 15)	All	NP
10	3-12090-4	Crank Assembly—Control	All	1
	9-3126	Installation—Intercooler temperature control lever (LH) (see fig. 15)	All	NP
	9-3126-1	Installation—Intercooler temperature control lever (RH) (see fig. 15)	All	NP
11	3-12170	Lever Assembly—Control	All	1
12	9-3124-33	Duct Assembly—Cooling air (LH outboard) (see fig. 34)	All	Ref
	9-3124-34	Duct Assembly—Cooling air (RH outboard) (see fig. 34)	All	Ref
13	1-17588-3	Lever	All	Ref
14	55-6339	Duct Assembly—Cooling air (LH inboard) (see fig. 33)	All	Ref
	55-6339-1	Duct Assembly—Cooling air (RH inboard) (see fig. 33)	All	Ref
15	1-17588	Lever—Engine control	All	Ref

PUBLISHED BY AVIALOGS.COM

WING

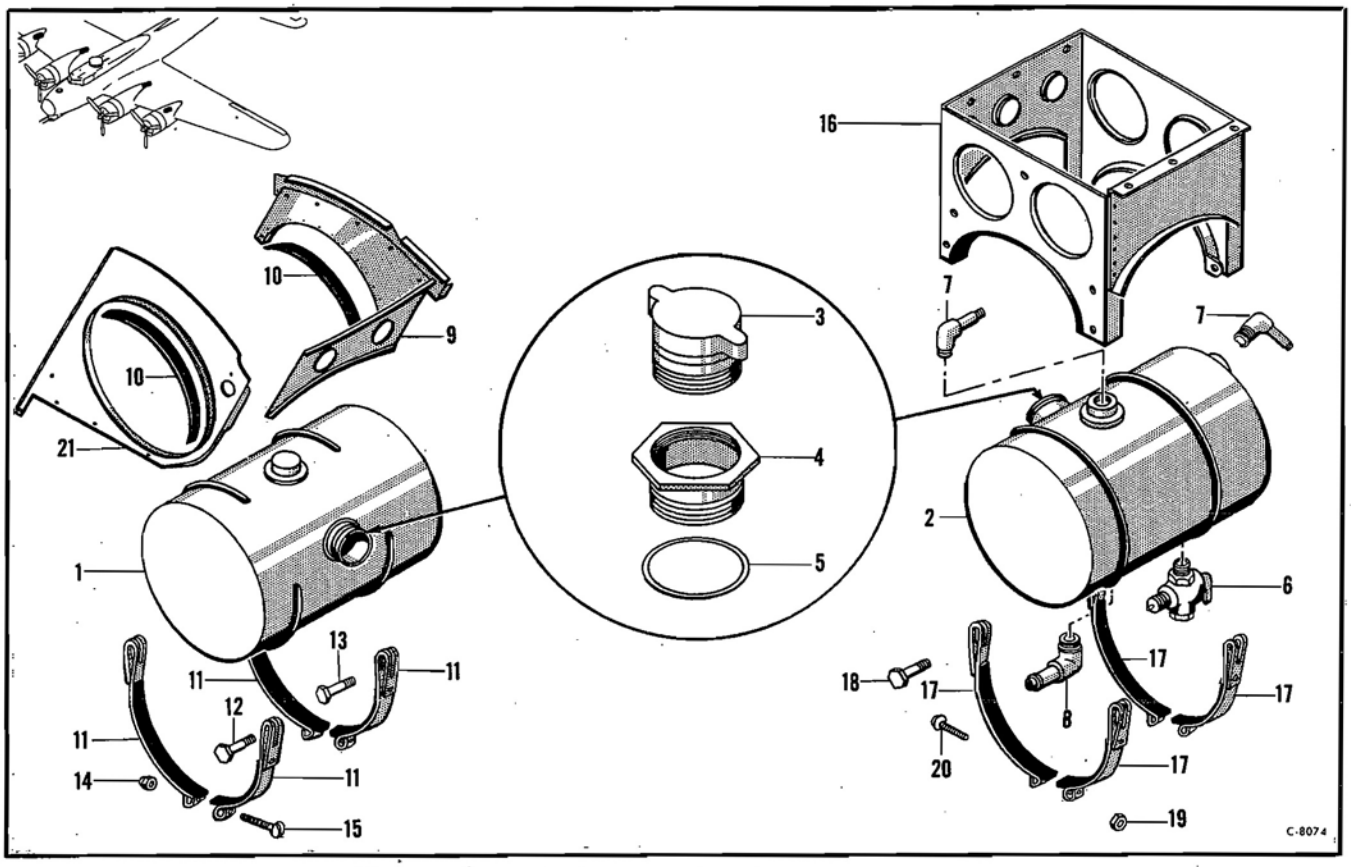

Figure 38—Supercharger Oil Tank and Tank Supports

Supercharger Oil Tank and Tank Supports

Figure & Index No.	*Part Number*	*1 2 3 4 5 6 7 Nomenclature*	*Usage Code*	*Units Per Assy.*
		Supercharger Oil Tank and Tank Supports		
	55-6088-440	Tank Assembly—LH outboard (see fig. 31)	All	Ref
	55-6088-439	Tank Assembly—LH inboard & RH outboard (see fig. 31 & 32)	All	Ref
	55-6088-441	Tank Assembly—RH inboard (see fig. 32)	All	Ref
	49-3047-1	Tank Assembly—Supercharger lubricating oil (LH outboard & RH inboard)	All	1
	49-3047	Tank Assembly—Supercharger lubricating oil (LH inboard & RH outboard)	All	1
38-1	49-3047-401	Tank Assembly (LH outboard and RH inboard)	All	2
2	49-3047-400	Tank Assembly (LH inboard and RH outboard)	All	2
	49-3047-402	Filler Assembly	All	1
	1-22655-1	Cap Assembly—Tank filler	All	1
3	42B3581	Cap—Tank	All	1
4	1-12965	Nut—Tank filler unit	All	1
5	AN900-40	Gasket—Annular copper	All	1
6	765-3	Cock—Shut-off	All	1
7	AN842-8	Elbow—90 degree hose	All	2
8	AN842-10	Elbow—90 degree hose	All	1
	55-6162	Installation—Supercharger oil tank support (LH outboard) (see fig. 15)	All	NP
	55-6162-1	Installation—Supercharger oil tank support (RH outboard) (see fig. 15)	All	NP
9	55-6162-400	Support Assembly—Oil tank (LH outboard)	All	1
	55-6162-401	Support Assembly—Oil tank (RH outboard)	All	1
10	55-6162-402	Cushion	All	2
11	3-19988	Strap Assembly	All	4
12	AN3-14A	Bolt—Aircraft	All	2
13	AN3-12A	Bolt—Aircraft	All	2
14	AN365-1032	Nut-Self-locking	All	6
15	AN520-1032-32	Screw—Round head	All	2
	15-6623	Installation—Supercharger oil tank cradle (LH inboard) (see fig. 9)	All	NP
	15-6623-1	Installation—Supercharger oil tank cradle (RH inboard) (see fig. 9)	All	NP
16	15-6623-22	Cradle Assembly—Oil tank (inboard)	All	1
17	3-19988	Strap Assembly—Supercharger oil tank	All	4
18	AN3-12A	Bolt—Aircraft	All	4
19	AN365-1032	Nut—Self-locking	All	6
20	AN520-10R32	Screw—Round head	All	2
	6-8101	Installation—Cooling air duct support (LH)	All	NP
	6-8101-1	Installation—Cooling air duct support (RH)	All	NP
21	6-8101-5	Support Assembly (LH)	All	1
	6-8101-6	Support Assembly (RH)	All	1

PUBLISHED BY AVIALOGS.COM

WING

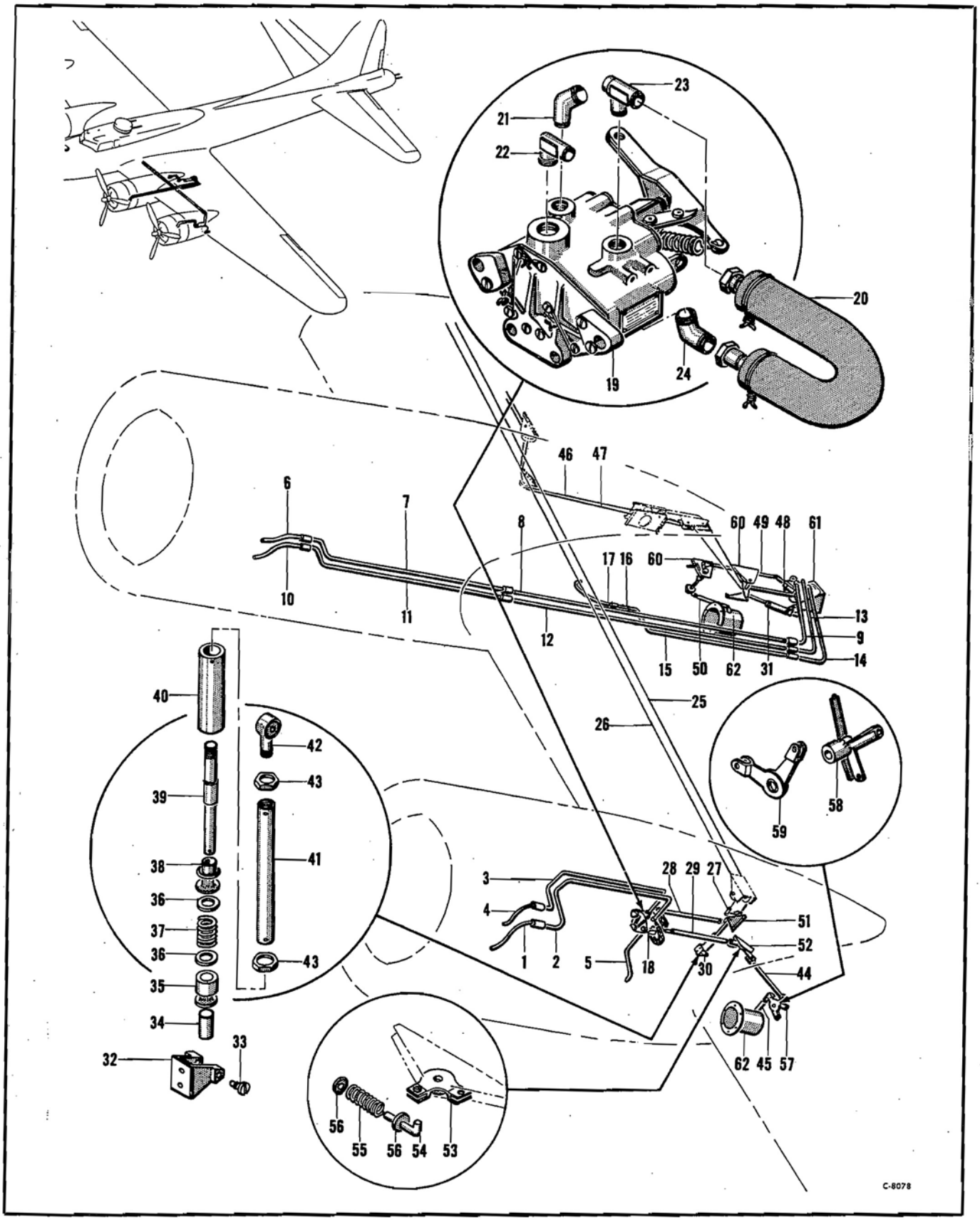

Figure 39—Wing Supercharger Regulator Tubing and Controls

PUBLISHED BY AVIALOGS.COM

WING

LH Wing Supercharger Regulator Tubing and Controls

Figure & Index No.	Part Number	1 2 3 4 5 6 7 Nomenclature	Usage Code	Units Per Assy.
		LH Wing Supercharger Regulator Tubing and Controls		
	15-9469	Installation—Supercharger Regulator Tubing	E	NP
39-1	85-6164-718	Tube Assembly (oil return to engine)	E	1
2	85-6164-709	Tube Assembly (oil return to engine)	E	1
3	85-6164-708	Tube Assembly (oil pressure from engine)	E	1
4	85-6164-601	Tube Assembly (oil pressure from engine)	E	1
5	85-6164-700	Tube Assembly (oil pressure balance)	E	1
6	85-6164-717	Tube Assembly (oil return to engine)	E	1
7	85-6164-609	Tube Assembly (oil return to engine)	E	1
8	85-6164-612	Tube Assembly (oil return to engine)	E	1
9	85-6164-710	Tube Assembly (oil return to engine)	E	1
10	85-6164-606	Tube Assembly (oil pressure from engine)	E	1
11	85-6164-608	Tube Assembly (oil pressure from engine)	E	1
12	15-9469-19	Tube Assembly (oil pressure from engine)	E	1
13	85-6164-614	Tube Assembly (oil pressure from engine)	E	1
14	15-9469-5	Tube Assembly (oil pressure balance)	E	1
15	15-9469-3	Tube Assembly (oil pressure balance)	E	1
16	15-9469-1	Tube Assembly (oil pressure balance)	E	1
17	15-9469-13	Tube Assembly (oil pressure balance)	E	1
	55-7037	Installation—Supercharger control	E	NP
	9-3040-9	Installation—Supercharger control regulator	E	NP
	9-3040-11	Regulator Assembly—Supercharger	E	1
18	9-5539	Unit Assembly—Supercharger regulator	E	1
	9-5539-2	Regulator Assembly—Supercharger	E	1
19	103611-970-2	Regulator—Supercharger (Eclipse) (Type A-11) (Spec 95-28199) GFE	E	1
	3-16928	Blanket Assembly	E	1
20	9-5539-5	Tube Assembly	E	1
21	4CT45SS	Elbow—45 degree (Parker)	E	1
22	811CT8	Elbow	E	1
23	1-21087	Tee Assembly—Orifice	E	1
24	811CT45-8	Elbow—45 degree	E	1
25	BAC1824-307-1878	Cable Assembly (supercharger increase)	E	1
26	BAC1824-307-1956	Cable Assembly (supercharger decrease)	E	1
27	41-4198	Link—Control cable	E	8
28	1-18098-17-6	Rod Assembly—Control	E	1
29	1-18947-20-0	Rod Assembly—Engine control	E	1
30	9-3727	Installation—Supercharger cartridge (LH outboard)	E	NP
31	49-3684	Installation—Supercharger cartridge (LH inboard)	E	NP
	3-14681-2	Cartridge Assembly (LH outboard)	E	1
	3-14681-1	Cartridge Assembly (LH inboard)	E	1
32	1-18117-1	Fitting—Tube support (LH outboard)	E	1
	1-18117	Fitting—Tube support (LH inboard)	E	1
33	1-18127	Screw—.25 pin head	E	2
34	1-18241	Collar—Spring cylinder rod	E	1
35	1-18283-2	Bushing—Spring cylinder	E	1
36	AN960-516	Washer—Plain	E	2
37	1-18795	Spring—Supercharger cartridge	E	1
38	1-18283	Bushing—Spring cylinder	E	1
39	1-18971	Rod—Spring cylinder	E	1
40	1-18282	Tube—Spring cylinder	E	1
41	1-21081-6	Tube—Cartridge connector (LH outboard)	E	1
	1-21081-4	Tube—Cartridge connector (LH inboard)	E	1
42	RE3M6A	End—Rod (Fafnir)	E	1
43	AN316-6R	Nut—Aircraft check	E	2
44	1-18979-8-2	Rod Assembly—Engine control	E	1
45	1-18941-12-6	Rod Assembly—Waste gate	E	1
46	BAC1824-307-1060	Cable Assembly (supercharger increase)	E	1
47	BAC1824-307-1166	Cable Assembly (supercharger decrease)	E	1
48	1-18979-9-1	Rod Assembly—Engine control	E	1
49	1-18947-15-1	Rod Assembly—Engine control	E	1
50	1-18941-9-5	Rod Assembly—Waste gate	E	1
51	9-3729	Installation—Supercharger control bracket (see fig. 9 and 40)	E	NP
52	46-80I3	Installation—Supercharger control bracket (see fig. 9)	E	NP
53	3-12090-8	Crank Assembly—Control	E	1
54	1-20200	Pin Assembly—Threaded	E	1
55	1-20199	Spring—Compression	E	1
56	1-20201	Washer—Cup	E	2
57	6-8375	Installation—Supercharger control bracket (see fig. 9)	E	NP
58	3-12212	Bracket—Supercharger control	E	1
59	3-8202-90	Crank Assembly—Control	E	1
60	65-6142	Installation—Supercharger control bracket (see fig. 11 and 41)	E	NP
61	9-5538	Unit Assembly—Supercharger regulator (see fig. 41)	E	Ref
62	15-9796	Installation—Supercharger (see fig. 33 and 34)	E	NP

PUBLISHED BY AVIALOGS.COM

WING

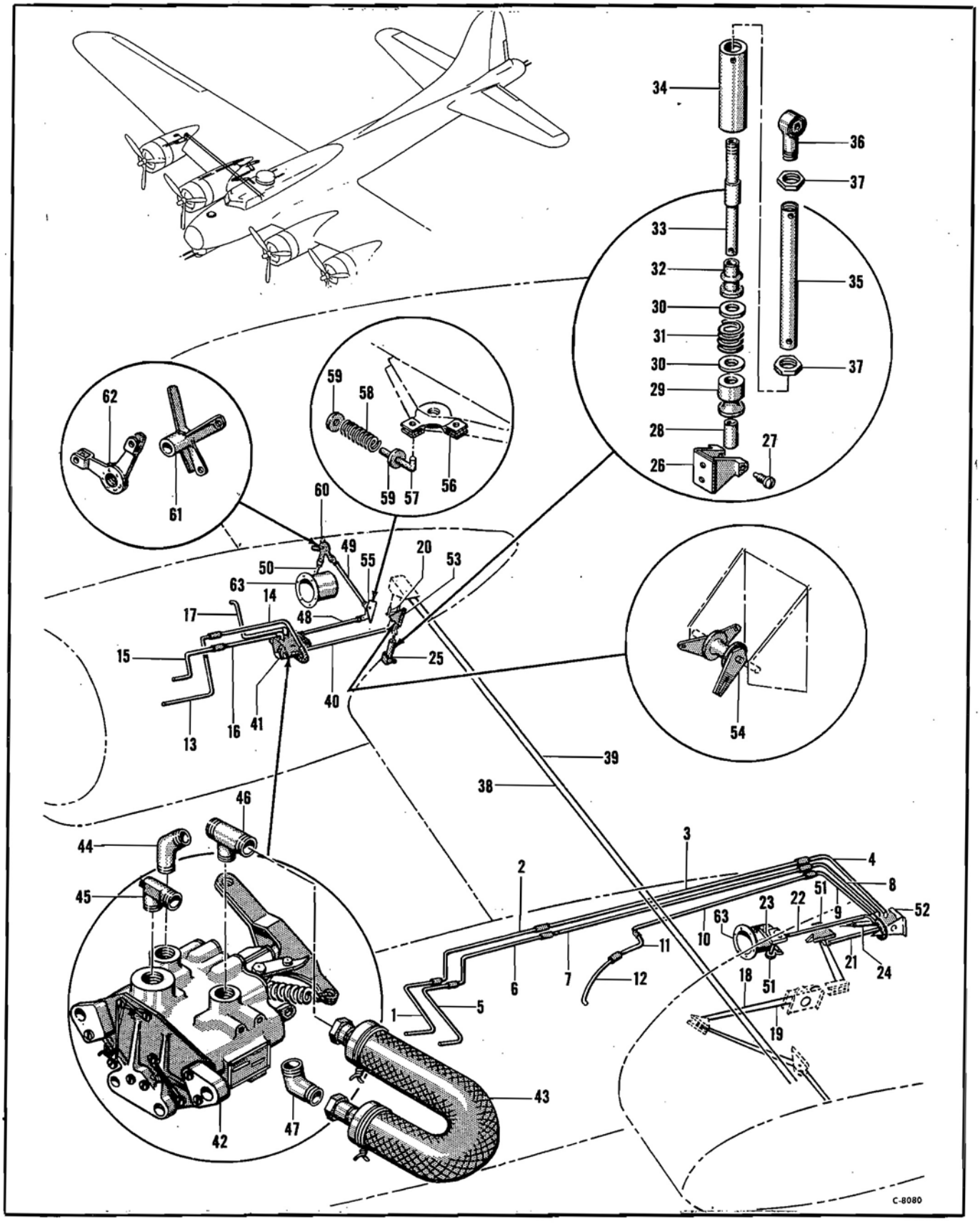

Figure 40—RH Wing Supercharger Regulator Tubing and Controls

PUBLISHED BY AVIALOGS.COM

WING

RH Wing Supercharger Regulator Tubing and Controls

Figure & Index No.	Part Number	1 2 3 4 5 6 7 Nomenclature	Usage Code	Units Per Assy.
		RH Wing Supercharger Regulator Tubing and Controls		
	15-9469	Installation—Supercharger regulator tubing	E	NP
40-1	85-6164-715	Tube Assembly (oil return to engine)	E	1
2	85-6164-619	Tube Assembly (oil return to engine)	E	1
3	85-6164-612	Tube Assembly (oil return to engine)	E	1
4	85-6164-711	Tube Assembly (oil return to engine)	E	1
5	85-6164-716	Tube Assembly (oil pressure from engine)	E	1
6	85-6164-618	Tube Assembly (oil pressure from engine)	E	1
7	15-9469-19	Tube Assembly (oil pressure from engine)	E	1
8	85-6164-622	Tube Assembly (oil pressure from engine)	E	1
9	15-9469-6	Tube Assembly (oil pressure balance)	E	1
10	15-9469-4	Tube Assembly (oil pressure balance)	E	1
11	15-9469-2	Tube Assembly (oil pressure balance)	E	1
12	15-9469-14	Tube Assembly (oil pressure balance)	E	1
13	85-6164-714	Tube Assembly (oil return to engine)	E	1
14	85-6164-713	Tube Assembly (oil return to engine)	E	1
15	85-6164-627	Tube Assembly (oil pressure from engine)	E	1
16	85-6164-712	Tube Assembly (oil pressure from engine)	E	1
17	85-6164-701	Tube Assembly (oil pressure balance)	E	1
	55-7037	Installation—Supercharger control	E	NP
18	BAC1824-307-1070	Cable Assembly (supercharger increase)	E	1
19	BAC1824-307-1185	Cable Assembly (supercharger decrease)	E	1
20	41-4198	Link—Control cable	E	8
21	1-18979-9-4	Rod Assembly—Engine control	E	1
22	1-18947-11-9	Rod Assembly—Engine control	E	1
23	1-18941-7-5	Rod Assembly—Waste gate	E	1
24	49-3684-1	Installation—Supercharger cartridge (RH inboard)	E	NP
25	9-3727-1	Installation—Supercharger cartridge (RH outboard)	E	NP
	3-14681-1	Cartridge Assembly (RH inboard)	E	1
	3-14681-2	Cartridge Assembly (RH outboard)	E	1
26	1-18117	Fitting—Tube support (RH inboard)	E	1
	1-18117-1	Fitting—Tube support (RH outboard)	E	1
27	1-18127	Screw—.25 pin head	E	2
28	1-18241	Collar—Spring cylinder rod	E	1
29	1-18283-2	Bushing—Spring cylinder	E	1
30	AN960-516	Washer—Plain	E	1
31	1-18795	Spring—Supercharger cartridge	E	2
32	1-18283	Bushing—Spring cylinder	E	1
33	1-18971	Rod—Spring cylinder	E	1
34	1-18282	Tube—Spring cylinder	E	1
35	1-21081-5	Tube—Cartridge connector (RH inboard)	E	1
	1-21081-7	Tube—Cartridge connector (RH outboard)	E	1
36	RE3M6A	End—Rod (Fafnir)	E	1
37	AN316-6R	Nut—Aircraft check	E	2
38	BAC1824-307-1978	Cable Assembly (supercharger increase)	E	1
39	BAC1824-307-1880	Cable Assembly (supercharger decrease)	E	1
40	1-18098-17-1	Rod Assembly—Control	E	1
	9-3049-10	Installation—Supercharger control regulator	E	NP
	9-3049-12	Regulator Assembly—Supercharger	E	1
41	9-5539-1	Unit Assembly—Supercharger regulator	E	1
	9-5539-2	Regulator Assembly—Supercharger	E	1
42	103611-970-2	Regulator—Supercharger (Eclipse) (spec 95-28199) (type A-11) GFE (see T.O. 03-1-6)	E	2
	3-16928	Blanket Assembly	E	1
43	9-5539-7	Tube Assembly—Supercharger regulator	E	1
44	4CT-SS	Elbow (Parker)	E	1
45	811CT8	Elbow	E	1
46	1-21087	Tee Assembly—Orifice	E	1
47	811CT45-8	Elbow—45 degree	E	1
48	1-18947-20-0	Rod Assembly—Engine control	E	1
49	1-18098-17-7	Rod Assembly—Control	E	1
50	1-18941-12-6	Rod Assembly—Waste gate	E	1
51	65-6154	Installation—Supercharger control bracket (see fig. 11 & 42)	E	NP
52	9-5538-1	Unit Assembly—Supercharger regulator (see fig. 42)	E	Ref
53	9-3729-1	Installation—Supercharger control bracket (RH) (see fig. 9)	E	NP
	9-3729	Installation—Supercharger control bracket (LH) (see fig. 9)	E	NP
54	3-14673	Crank Assembly—Supercharger control (RH)	E	1
	3-14667	Crank Assembly—Supercharger control (LH)	E	1
55	46-8014	Installation—Supercharger control bracket (see fig. 9)	E	NP
56	3-12090-9	Crank Assembly—Control	E	1
57	1-20200	Pin Assembly—Threaded	E	1
58	1-20199	Spring—Compression	E	1
59	1-20201	Washer—Cup	E	2
60	6-8376	Installation—Supercharger control bracket (see fig. 9)	E	NP
	6-8376-1	Bracket Assembly—Supercharger control	E	1
61	3-12212-1	Bracket—Control	E	1
62	3-8202-91	Crank Assembly	E	1
63	15-9796	Installation—Supercharger (see fig. 33 & 34)	E	NP

PUBLISHED BY AVIALOGS.COM

WING

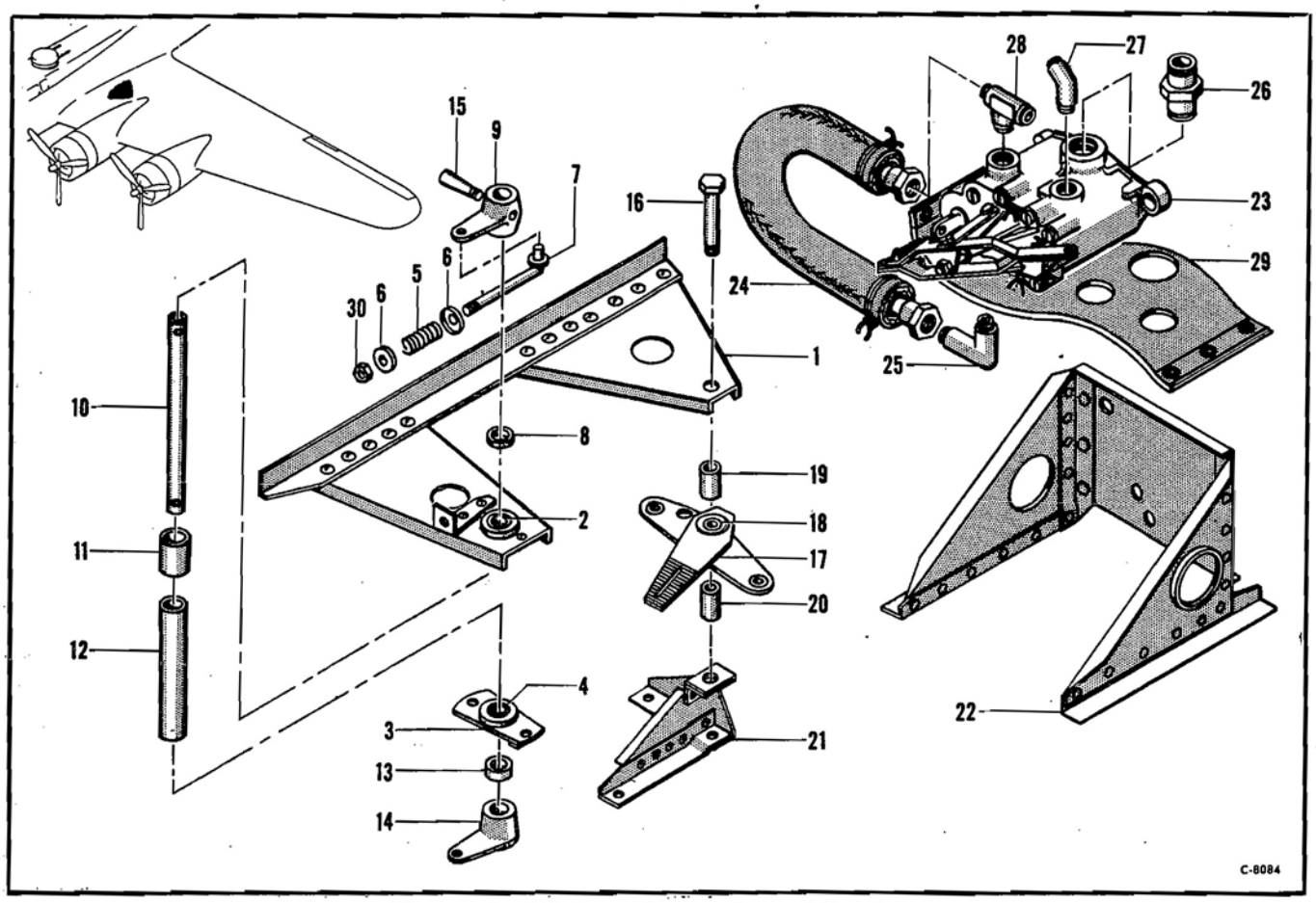

Figure 41—LH Supercharger Control Bracket

LH Supercharger Control Bracket

Figure & Index No.	*Part Number*	*1 2 3 4 5 6 7* *Nomenclature*	*Usage Code*	*Units Per Assy.*
	65-6142	Installation—LH supercharger control bracket (see fig. 11)	E	NP
41-1	65-6142-500	Bracket Assembly—Supercharger control	E	1
	41-9284	Housing Assembly—Bearing	E	1
2	AN201K8A	Bearing—Metal shielded ball	E	1
3	55-6142-1	Bearing Assembly—Supercharger control	E	1
	41-9284	Housing Assembly—Bearing	E	1
4	AN201K8A	Bearing—Metal shielded ball	E	1
5	1-20199	Spring—Compression	E	1
6	1-20201	Washer—Cup	E	2
	65-6142-505	Shaft Assembly—Supercharger bracket	E	1
7	1-20200	Pin Assembly—Threaded	E	1
8	BAC1608-8	Spacer—1-2 bolt	E	1
9	1-17588-5	Lever—Engine control	E	1
10	41-4023-8-22	Shaft	E	1
11	55-6142-3	Tube—Gray fiber	E	1
12	55-6142-19	Tube—Gray fiber	E	1
13	BAC1608-41	Spacer—1-2 bolt	E	1
14	17588-4	Lever—Engine control	E	1
15	PN386-1-7	Pin—Threaded taper	E	1
16	AN4-24	Bolt—Aircraft	E	1
17	3-14669	Crank Assembly	E	1
18	BO4W10	Bearing—Ball control (Fafnir)	E	1
19	BAC1604-38	Spacer—1-4 bolt	E	1
20	BAC1604-48	Spacer—1-4 bolt	E	1
21	65-6142-502	Bracket Assembly—Supercharger control	E	1
	65-6142-506	Regulator Assembly—Supercharger	E	1
22	9-3038	Bracket Assembly—Supercharger regulator support	E	1
	9-5538-1	Unit Assembly—Supercharger regulator	E	1
	9-5538-2	Regulator Assembly—Supercharger	E	1
23	103611-970-2	Regulator—Supercharger (Eclipse) (TypeA-11) (Spec 95-28199) GFE(See T.O. 03-1-6)	E	1
24	9-5538-6	Tube—Supercharger control bracket	E	1
25	811CT8	Elbow	E	1
26	811FT8	Nipple	E	1
27	4CT45SS	Elbow—45 degree	E	1
28	1-21087	Tee Assembly	E	1
29	3-16928	Blanket Assembly	E	1
30	AN365-832	Nut—Self-locking	E	1

PUBLISHED BY AVIALOGS.COM

WING

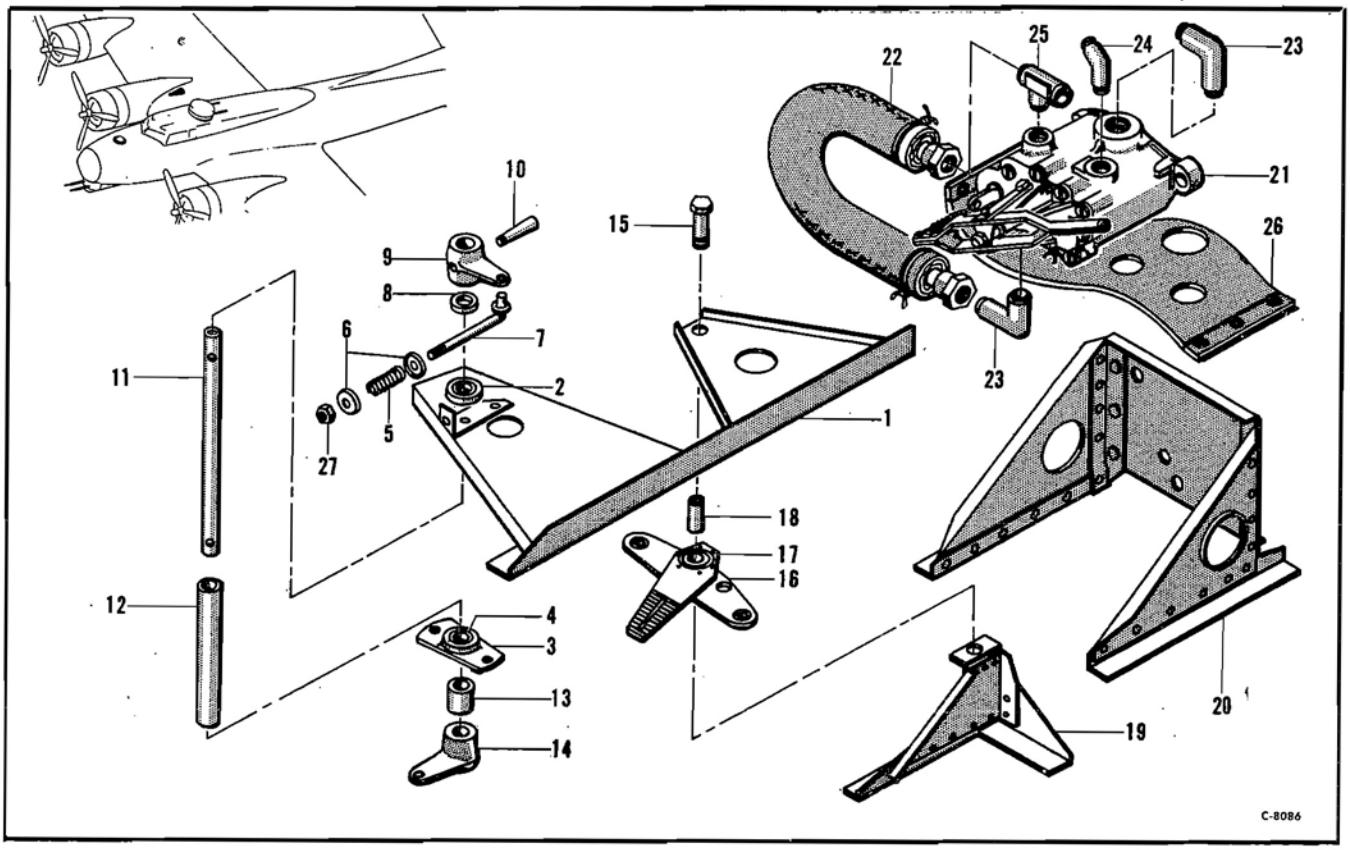

Figure 42—RH Supercharger Control Bracket

RH Supercharger Control Bracket

Figure & Index No.	*Part Number*	*1 2 3 4 5 6 7 Nomenclature*	*Usage Code*	*Units Per Assy.*
	65-6154	Installation—RH supercharger control bracket (see fig. 11)	E	NP
42-1	65-6154-500	Bracket Assembly—Supercharger control	E	1
	41-9284	Housing Assembly—Bearing	E	1
2	AN201K8A	Bearing—Metal shielded ball	E	1
3	55-6154-2	Bearing Assembly	E	1
	41-9284	Housing Assembly—Bearing	E	1
4	AN201K8A	Bearing—Metal shielded ball	E	1
5	1-20199	Spring—Compression	E	1
6	1-20101	Washer—Cup	E	2
	65-6154-502	Shaft Assembly	E	1
7	1-20200	Pin Assembly—Threaded	E	1
8	BAC1608-8	Spacer	E	1
9	1-17588-5	Lever—Engine control	E	1
10	AN386-1-7	Pin—Threaded taper	E	1
11	41-4023-8-10	Shaft	E	1
12	55-6154-18	Tube	E	1
13	BAC1608-41	Spacer—1-2 bolt	E	1
14	1-17588-4	Lever—Engine control	E	1
15	AN4-20	Bolt—Aircraft	E	1
16	3-14671	Crank Assembly—Supercharger control	E	1
17	BC4W10	Bearing—Ball control (Fafnir)	E	1
18	BAC1604-50	Spacer	E	1
19	55-6154-6	Bracket Assembly—Supercharger control	E	1
	65-6154-504	Regulator Assembly—Supercharger control	E	1
20	9-3038	Bracket Assembly—Supercharger regulator support	E	1
	9-5538	Unit Assembly—Supercharger regulator	E	1
	9-5538-2	Regulator Assembly—Supercharger	E	1
21	103611-970-2	Regulator—Supercharger (Eclipse) (type A-11) (spec 95-28199) GFE (see T.O. 03-1-6)	E	1
22	9-5538-6	Tube—Supercharger control bracket	E	1
23	811CT8	Elbow	E	2
24	4CT45SS	Elbow—45 degree	E	1
25	1-21087	Tee Assembly	E	1
26	3-16928	Blanket Assembly	E	1
27	AN365-832	Nut—Self-locking	E	1

PUBLISHED BY AVIALOGS.COM

WING

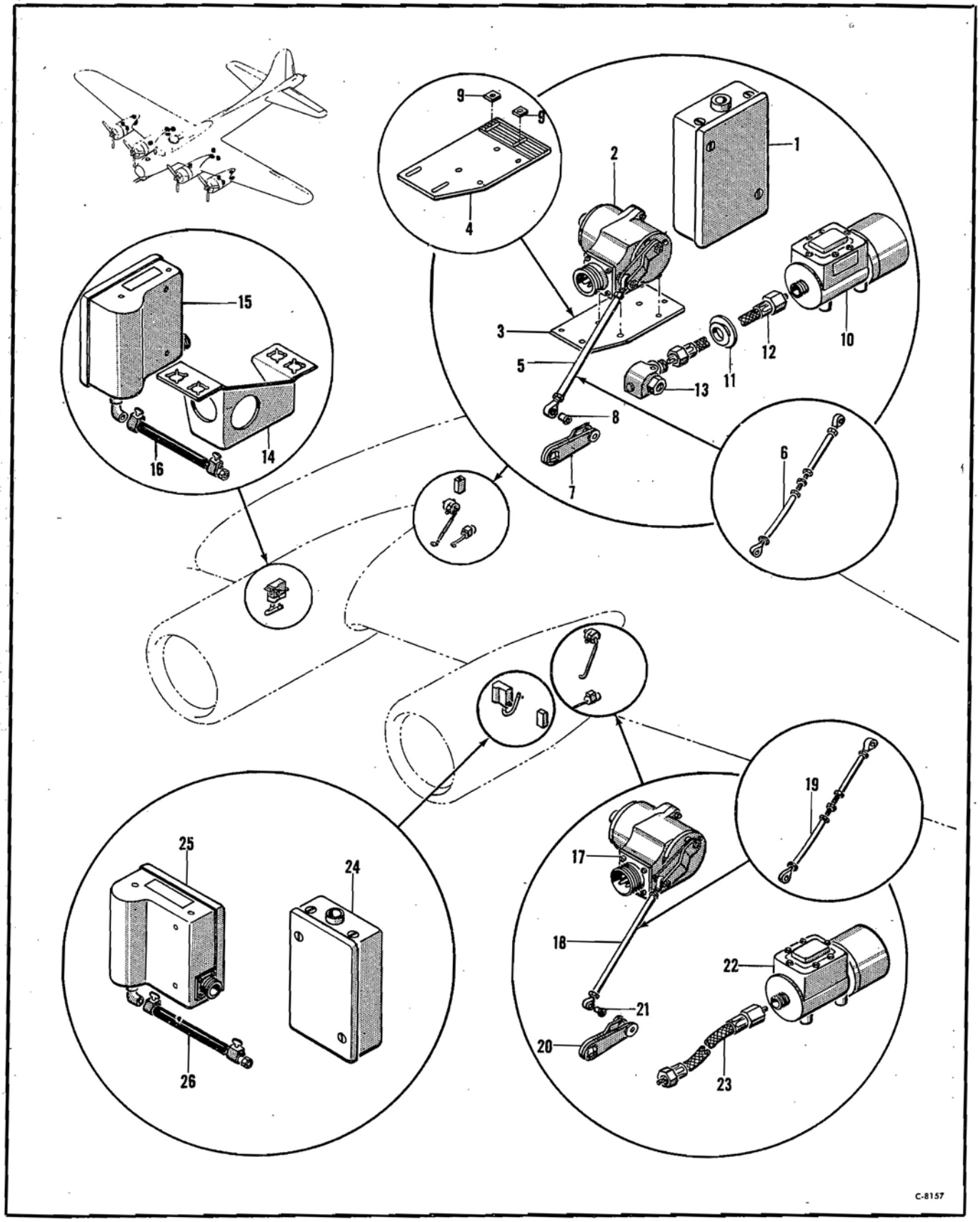

Figure 43 - Turbo-electric Regulator

PUBLISHED BY AVIALOGS.COM

WING

Turbo-electric Regulator

Figure & Index No.	Part Number	1 2 3 4 5 6 7 Nomenclature	Usage Code	Units Per Assy.
	15-11177	Installation—Turbo-electric regulator wing	All	NP
	9-6623	Installation—Turbo-electric junction box (LH inboard)	ZE	NP
	9-6623-1	Installation—Turbo-electric junction box (RH inboard)	ZE	NP
43-1	G1065A1CA1	Box—Junction (Minneapolis-Honeywell) GFE	ZE	1
	14-3704	Installation—Turbo-electric (LH inboard)	ZE	NP
	14-3706	Installation—Turbo-electric (RH inboard)	ZE	NP
	14-3704-1	Motor Assembly (LH inboard)	VE	1
	14-3706-1	Motor Assembly (RH inboard)	VE	1
	14-3704-2	Motor Assembly (LH inboard)	SN	1
	14-3706-2	Motor Assembly (RH inboard)	SN	1
2	G303A-Y2CA1	Motor (Minneapolis-Honeywell) GFE	ZE	1
3	3-21422	Plate—Support (used on 14-3704-1 only)	IE	1
	3-21422-1	Plate—Support (used on 14-3704-1 only)	GF	1
4	3-31104	Plate—Support (used on 14-3704-2 only)	SN	1
5	1-18941-13-7	Rod Assembly—Waste gate	JE	1
	RE3M6-2N	End—Rod (Fafnir)	JE	1
	1-18936	End—Rod	JE	1
6	3-25389	Rod Assembly—Waste gate	PF	1
	3-25389-6	Rod Assembly—Waste gate	SN	1
	RE3M6-2N	End—Rod (Fafnir)	QF	1
	3-25390	Screw—Adjusting	QF	1
	1-18936	End—Rod	QF	1
7	3-21391-1	Lever Assembly—Engine control	SC	1
	3-21391-5	Lever Assembly—Engine control	VP	1
8	1-18984	Bushing—Rod end	SC	1
	1-18984-1	Bushing—Rod end	VP	1
9	3-31105	Washer—Serrated	SN	2
	15-11662	Installation—Turbo control governor (LH inboard)	ZE	NP
	15-11662-6	Installation—Turbo control governor (RH inboard)	YO	NP
	15-11662-3	Governor Assembly	ME	1
	15-11662-4	Governor Assembly	BH	1
	15-11662-5	Governor Assembly	YO	1
10	G1057A3CA1	Governor (Minneapolis-Honeywell) GFE	ME	1
	G1057A4CA1	Governor (Minneapolis-Honeywell) GFE	EH	1
11	3-28836	Grommet—Supercharger seal	XM	1
12	G1075A2	Shaft Assembly—Flexible (Minneapolis-Honeywell) GFE	ZE	1
13	7800-6	Adapter (Peerless of America)	ZE	1
	15-11604	Installation—Turbo-electric pressuretrol (LH inboard)	ZE	NP
	15-11604-1	Installation—Turbo-electric pressuretrol (RH inboard)	ZE	NP
14	15-11604-2	Bracket Assembly	ZE	1
15	G16A2CA1	Pressuretrol (Minneapolis-Honeywell) GFE	ZE	1
16	AN884-4-32	Hose—Resistant synthetic	ZE	1
	AN842-4	Elbow—90 degree hose	ZE	1
	AN844-4	Elbow—45 degree hose	ZE	1
	15-11667	Installation—Turbo-electric motor (LH outboard)	ZE	NP
	15-11671	Installation—Turbo-electric motor (RH outboard)	ZE	NP
	15-11667-1	Motor Assembly (LH outboard)	ZE	1
	15-11671-1	Motor Assembly (RH outboard)	ZE	1
17	G303A-Y2CA1	Motor (Minneapolis-Honeywell) GFE	ZE	1
18	1-18941-13-7	Rod Assembly—Waste gate	JE	1
	RE3M6-2N	End—Rod (Fafnir)	JE	1
	1-18936	End—Rod	JE	1
19	3-25389	Rod Assembly—Waste gate	QF	1
	RE3M6-2N	End—Rod (Fafnir)	QF	1
	3-25390	Screw—Adjusting	QF	1
	1-18936	End—Rod	QF	1
20	3-21391	Lever Assembly—Engine control	SC	1
	3-21391-4	Lever Assembly—Engine control	VP	1
21	1-18984	Bushing—Rod end	SC	1
	1-18984-1	Bushing—Rod end	VP	1
	15-11618	Installation—Turbo-electric governor (outboard)	ZE	NP
	15-11618-1	Governor Assembly	ME	1
	15-11618-2	Governor Assembly	CH	1
	15-11618-3	Governor Assembly	NP	1
22	G1057A3CA1	Governor (Minneapolis-Honeywell) GFE	ME	1
	G1057A4CA1	Governor (Minneapolis-Honeywell) GFE	EH	1
23	G1075A2	Shaft Assembly—Flexible (Minneapolis-Honeywell) GFE	ZE	1
	9-5898	Installation—Turbo-electric junction box (LH outboard)	ZE	NP
	9-5898-1	Installation—Turbo-electric junction box (RH outboard)	ZE	NP
24	G1065A	Box—Junction (Minneapolis-Honeywell) GFE	ZE	1
	15-11619	Installation—Turbo-electric pressuretrol (LH outboard)	ZE	NP
	15-11619-1	Installation—Turbo-electric pressuretrol (RH outboard)	ZE	NP
25	G16A2CA1	Pressuretrol (Minneapolis-Honeywell) GFE	ZE	1
26	AN884-4-32	Hose—Resistant synthetic	ZE	1
	AN844-4	Elbow—45 degree hose	ZE	1
	AN842-4	Elbow—90 degree hose	ZE	1

PUBLISHED BY AVIALOGS.COM

WING

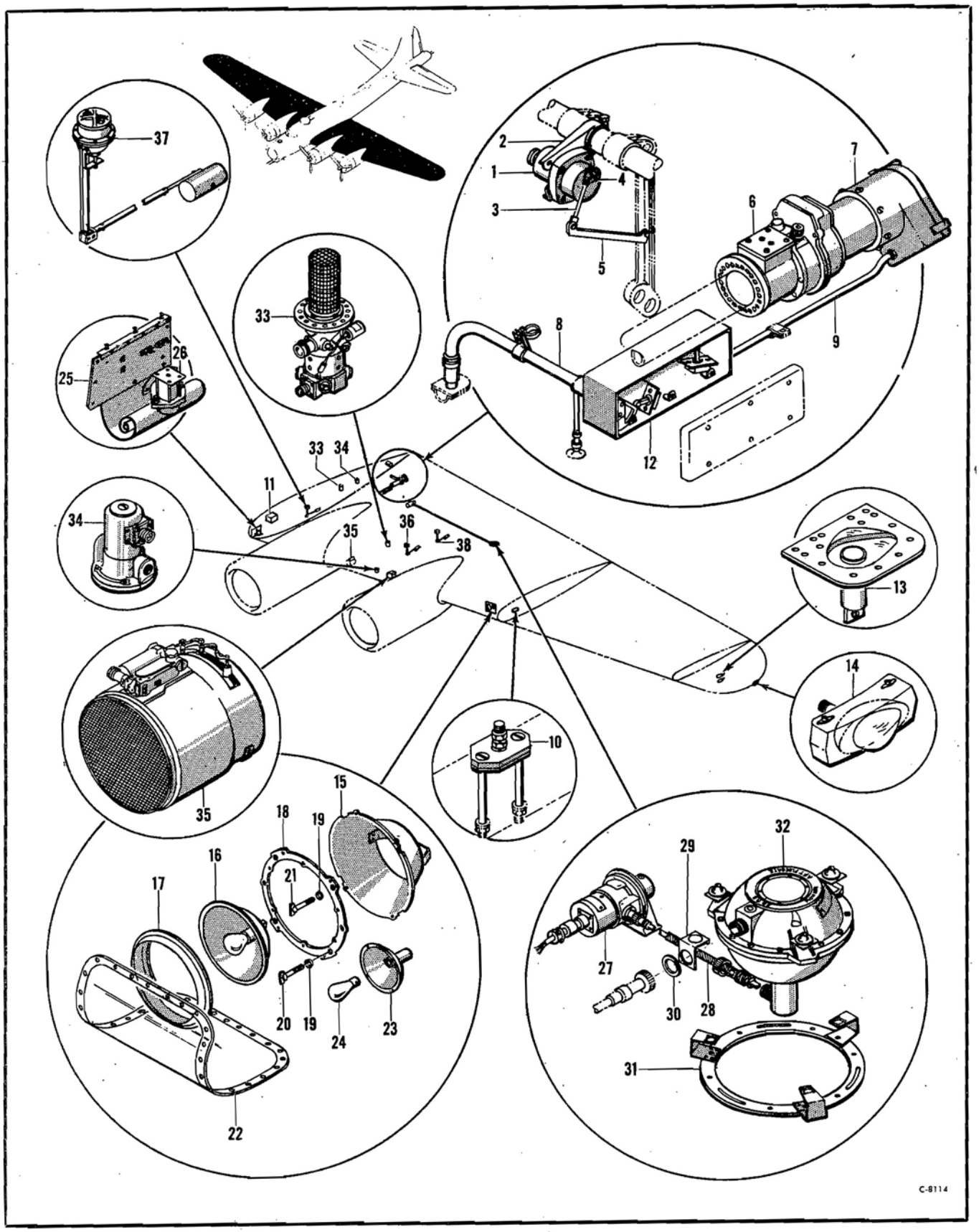

Figure 44—Wing Electrical

PUBLISHED BY AVIALOGS.COM

WING

Wing Electrical

Figure & Index No.	Part Number	1 2 3 4 5 6 7 Nomenclature	Usage Code	Units Per Assy.
		Wing Electrical		
	55-7332	Installation—Electrical equipment	All	NP
	6-9214	Installation—Flap position indicator (LH)	All	NP
	6-9214-5	Indicator Assembly	All	1
44-1	4550-2	Transmitter—Position (Pioneer)	All	1
2	3-13009	Bracket Assembly—Autosyn transmitter	All	1
3	6-9214-3	Bolt—Eye	All	1
4	41-9801	Arm—Indicator	All	1
5	41-9268-5-16	Link—Indicator	All	1
	AN42-7A	Bolt—Eye	All	1
	7-1335-1	Installation—Flap motor (LH)	All	NP
6	786-1	Motor Assembly—Wing flap (Eclipse) (see T.O. 03-5CC-26)	All	1
7	53-6388	Shield Assembly—Retracting motor	All	1
	41-7074-1	Bushing—Insulating	All	2
	41-9505	Insulator	All	1
	3-28883	Key—Retracting motor	All	1
	48-1078	Installation—Flap motor vent (LH)	All	NP
8	48-1078-400	Vent Assembly	SC	1
	48-1078-408	Vent Assembly	VP	1
	31-1177-3	Nut	All	1
	31-1176-3	Clamp	All	1
9	48-1078-404	Tube	All	1
	31-1177-2	Nut	All	2
	31-1176-2	Clamp	All	2
	3-13551	Installation—Station 19 wing panel (LH)	All	NP
	3-13551-1	Installation—Station 19 wing panel (RH)	All	NP
10	41-5123	Panel Assembly—Connector	All	1
	41-5124	Insulator	All	1
11	14-1945	Installation—Battery (LH) (see fig. 47)	All	NP
	14-1945-1	Installation—Battery (RH) (see fig. 47)	All	NP
12	6-8325	Shield Assembly—Flap limit switch (see fig. 19)	All	Ref
13	49-1777-409	Installation—Wing running light (LH) (see fig. 3)	Z	NP
	49-1777-410	Installation—Wing running light (RH) (see fig. 3)	Z	NP
14	2-1885	Installation—Position lamp (LH) (see fig. 3)	YG	NP
	2-1885-1	Installation—Position lamp (RH) (see fig. 3)	YG	NP
	55-7607-2	Installation—Landing and passing lamp (LH) (see fig. 11)	All	NP
	55-7607-3	Installation—Landing and passing lamp (RH) (see fig. 11)	All	NP
	55-7607-4	Lamp Assembly	All	1
15	6-11939	Bracket Assembly—Landing lamp	All	1
16	AN3130-4560	Lamp—Par-64 bulb landing GFE	All	1
17	1-21458-1	Adapter GFE	All	1
18	6-7369	Plate—Landing lamp	All	1
19	21-9588-9	Washer—Ball seat	All	4
20	55-7607-6	Screw	All	2
21	55-7607-7	Screw	All	2
22	9-3648	Lens (LH)	All	1
	9-3648-1	Lens (RH)	All	1
23	37D4865	Lamp Assembly (LH) GFE	Z	1
24	AN3133-11	Lamp—S-11 single-contact (LH) GFE	Z	1
	15-13703	Installation—Battery fuses and solenoid panel (LH)	IL	NP
	15-13703-1	Installation—Battery fuses and solenoid panel (RH)	IL	NP
25	9-6742	Panel Assembly (LH)	HL	1
	9-6749	Panel Assembly (RH)	HL	1
	9-6742-3	Panel Assembly (LH)	PQ	1
	9-6749-4	Panel Assembly (RH)	NQ	1
	9-6749-5	Panel Assembly (RH)	YQ	1
	6-16383	Cover Assembly	HL	1
	6-16383-2	Cover Assembly	PQ	1
26	NO NUMBER	Relay—Current (LH) (Spec 94-32324B) (Type B-4) GFE	All	1
	NO NUMBER	Relay—Current (RH) (Spec 94-32324B) (Type B-4) GFE	All	2
	15-10429	Installation—Remote reading compass equipment	All	NP
	15-10438	Installation—Remote compass transmitter	All	NP
27	AN5754-1	Motor—Caging GFE	BB	1
	AN5754-2	Motor—Caging GFE	BL	1
28	3374Y	Drive Assembly—Flexible (S. S. White)	All	1
29	3-22295	Cover—Breather hole	B	1
30	1-29212	Washer—Rubber cork	B	1
31	6-14345	Ring Assembly—Remote compass	All	1
32	12002-1	Transmitter Assembly (Pioneer) GFE	All	1
33	TFD12000	Pump Assembly—Fuel booster (Thompson) (see T.O. 03-10EC-4) (see fig. 23)	All	Ref
34	2660	Valve—Fuel shut-off (Electromatic) (see fig. 23)	All	Ref
35	2R6697	Regulator Assembly (shutter and thermostat valve) (Airesearch) (see T.O. 03-15-17) (see fig. 29)	FO	Ref
	17556	Regulator Assembly—Oil temperature (Airesearch) (see T.O. 03-15-17) (see fig. 29)	XQ	Ref
	2E3078	Regulator Assembly (shutter control valve) (Airesearch) (see T.O. 03-15-17) (see fig. 29)	ZB	Ref
36	EA15-10	Unit Assembly—Fuel gage (Liquidometer) (see fig. 25)	RF	Ref
	EA15W	Unit Assembly—Fuel gage (Liquidometer) (see fig. 25)	L	Ref
37	EA15-11	Unit Assembly—Fuel gage (Liquidometer) (see fig. 25)	NG	Ref
	EA15W	Unit Assembly—Fuel gage (Liquidometer) (see fig. 25)	T	Ref
38	EA15-12	Unit Assembly—Fuel gage (Liquidometer) (see fig. 25)	DG	Ref
	EA15W	Unit Assembly—Fuel gage (Liquidometer) (see fig. 25)	S	Ref

PUBLISHED BY AVIALOGS.COM

WING

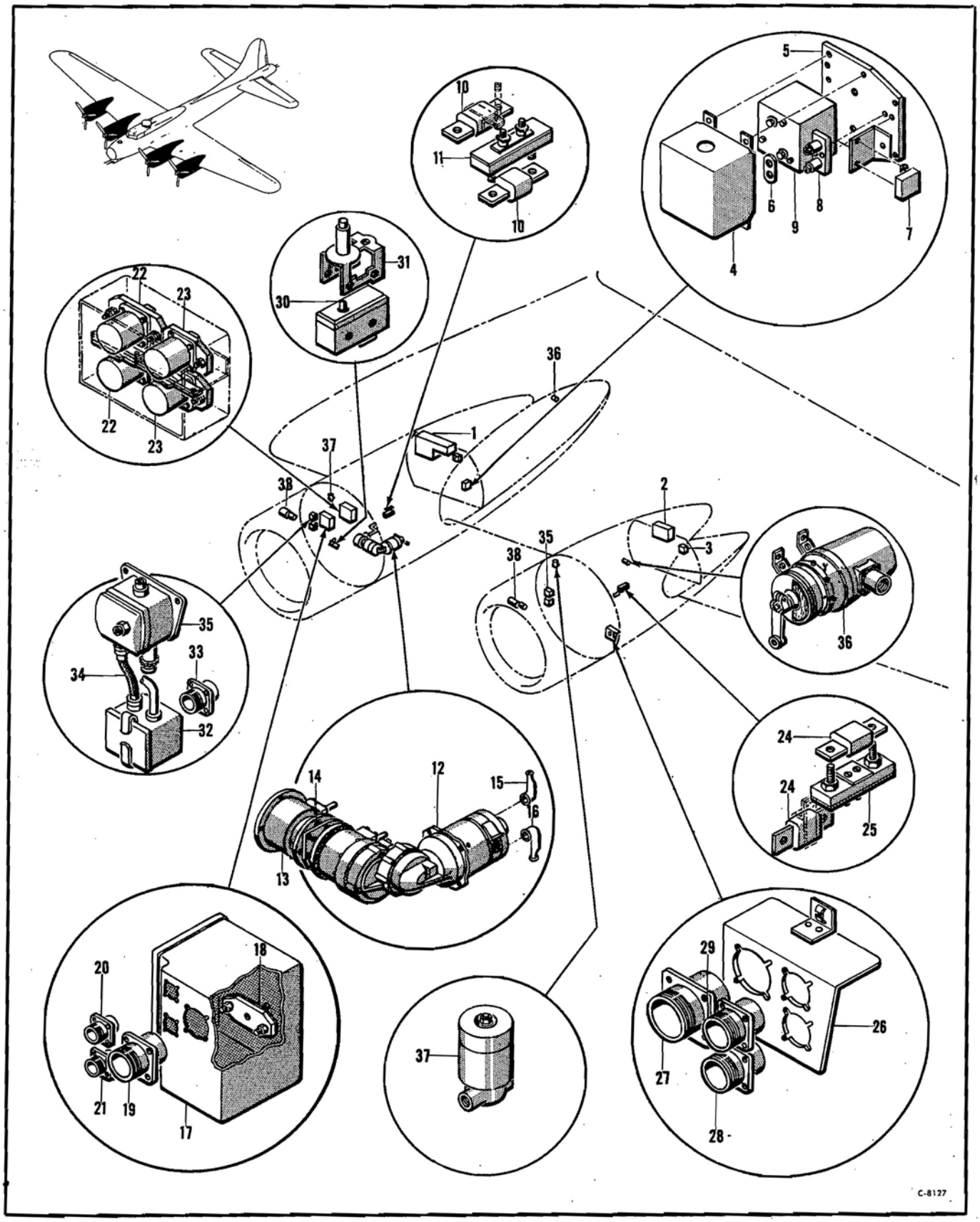

Figure 45—Nacelle Electrical

PUBLISHED BY AVIALOGS.COM

WING

Nacelle Electrical

Figure & Index No.	Part Number	1 2 3 4 5 6 7 Nomenclature	Usage Code	Units Per Assy.
		Nacelle Electrical		
	55-7332	Installation—Electrical equipment	All	NP
45-1	15-9270	Installation—Nacelle no. 2 solenoid inboard (see fig. 46)	All	NP
	15-9270-1	Installation—Nacelle no. 3 solenoid inboard (see fig. 46)	All	NP
2	58-1215	Installation—Nacelle no. 1 shield outboard (see fig. 46)	All	NP
	58-1215-1	Installation—Nacelle no. 4 shield outboard (see fig. 46)	All	NP
3	7-1958-16	Installation—Generator relay no. 1 outboard (see fig. 46)	All	NP
	7-1958-15	Installation—Generator relay no. 4 outboard (see fig. 46)	All	NP
	9-4918-6	Installation—Generator relay shield (LH inboard)	All	NP
	9-4919-9	Installation—Generator relay shield (RH inboard)	All	NP
	9-4918-14	Shield Assembly (LH)	IC	1
	9-4919-14	Shield Assembly (RH)	IC	1
	9-4918-15	Shield Assembly (LH)	VO	1
	9-4919-17	Shield Assembly (RH)	VO	1
	9-4918-16	Shield Assembly (LH)	ZQ	1
	9-4919-18	Shield Assembly (RH)	ZQ	1
4	3-16456-4	Shield Assembly	All	1
5	3-16919-5	Panel Assembly	All	1
6	9-4918-3	Bus Assembly (LH)	All	1
	9-4919-3	Bus Assembly (RH)	All	1
7	CA275X	Capacitor (P. R. Mallory)	All	1
8	AN3200-2	Shunt—External ammeter GFE	IC	1
9	AN3024-1	Switch—Generator control relay GFE	ID	1
	NO NUMBER	Relay (Type 3GTR72E4) GFE	ZQ	1
	6-13504	Installation—No. 2 nacelle limiter (LH inboard)	All	NP
	6-13505	Installation—No. 3 nacelle limiter (RH inboard)	All	NP
10	FLLH	Limiter (A9506—Burndy Engineering Co.)	All	2
11	FSH	Mount—Limiter (A9338—Burndy Engineering Co.)	All	1
	15-6345	Installation—Landing gear retracting motor (LH inboard)	All	NP
	15-6345-1	Installation—Landing gear retracting motor (RH inboard)	All	NP
12	1073-3	Motor Assembly—Landing gear (Eclipse) (LH inboard) (see AN03-5CC-26)	GC	1
	1073-2	Motor Assembly—Landing gear (Eclipse) (RH inboard) (see AN03-5CC-26)	GC	1
	1073-1	Motor Assembly—Landing gear (Eclipse) (see AN03-5CC-26)	RC	1
	6-19330	Retractor Assembly—Emergency hand (LH)	RC	1
	6-19330-1	Retractor Assembly—Emergency hand (RH)	RC	1
13	D129712-1	Box—Gear (Eclipse) (see T.O. 03-1-5)	RC	1
	6-19330-2	Plate—Cover	RC	1
14	3-28816	Adapter—Hand retraction	RC	1
	BAC1002-20	Key—5-32 square	WA	1
	3-28883	Key	KK	2
15	066424	Cover—Terminal rubber	All	1
16	1-30217	Cover—Terminal rubber	All	1
	46-8339	Installation—Inboard starter connector shield	All	NP
	46-8339-9	Shield Assembly	EA	1
17	3-12106	Shield Assembly—Junction	EA	1
18	41-5123	Panel Assembly	EA	1
19	AN3102-24-1S	Receptacle—Electrical connector	EA	1
	AN3100-24-1S	Receptacle—Electrical connector	QH	1
20	AN3102-16-13P	Receptacle—Electrical connector	EA	1
	AN3100-16-13P	Receptacle—Electrical connector	QH	1
21	AN3102-16S4S	Receptacle—Electrical connector	EA	1
	AN3100-16S4S	Receptacle—Electrical connector	QH	1
	15-13296	Installation—Nacelle solenoid inboard	IL	NP
	15-13296-1	Support Assembly	FL	1
	15-13296-2	Support Assembly	HN	1
	15-13296-3	Support Assembly	VP	1
22	NO NUMBER	Solenoid (Spec 94-32324) (Type B-4) GFE	FL	1
	NO NUMBER	Solenoid (Spec 94-32324) (Type B-4) GFE	HN	2
23	NO NUMBER	Relay (Spec 32424A) (Type B-8) GFE	JN	2
	6-13503	Installation—Nacelle limiter outboard (LH)	All	NP
	6-13503-1	Installation—Nacelle limiter outboard (RH)	All	NP
24	FLLF	Limiter (A9506—Burndy Engineering Co.)	All	2
25	FSH	Mount—Limiter (A9338—Burndy Engineering Co.)	All	1
	46-8335	Installation—Starter connector shield outboard	All	NP
26	3-20783	Support Assembly	All	1
27	AN3102-24-1S	Receptacle—Electrical connector	All	1
28	AN3102-16S4S	Receptacle—Electrical connector	All	1
29	AN3102-16-13P	Receptacle—Electrical connector	All	1
	6-20729	Installation—Warning light switch (LH inboard)	NQ	NP
	6-20729-1	Installation—Warning light switch (RH inboard)	NQ	NP
30	AN3210-1	Switch—Low travel limit	NQ	1
31	M2	Actuator (Micro-Switch)	NQ	1
	9-6603	Installation—Nacelle vibrator inboard	All	NP
	9-6602	Installation—Nacelle vibrator outboard	All	NP
32	9-6603-1	Shield Assembly (inboard)	All	1
	9-6602-1	Shield Assembly (outboard)	All	1
33	AN3102-20-6P	Receptacle—Electrical connector	All	1
34	9-6603-4	Conduit Assembly (inboard)	All	1
	9-6602-4	Conduit Assembly (outboard)	All	1
35	VJR24B5	Vibrator—Induction (American Bosch Co.) GFE	All	1
36	ALYC5091	Motor (Barber-Colman) (see fig. 36)	All	Ref
37	M441M2	Valve Assembly—Oil dilution (Air Associates) (see T.O. 03-15-17) (see fig. 30)	RA	Ref
	UC1070	Valve—Solenoid (United Aircraft) (see AN03-15-24) (see fig. 30)	SJ	Ref
38	54772-2	Motor and Pump (Hamilton) GFE (see fig. 27)	SA	Ref
	54772-21	Motor and Pump (Hamilton) GFE (see fig. 27)	VJ	Ref

PUBLISHED BY AVIALOGS.COM

WING

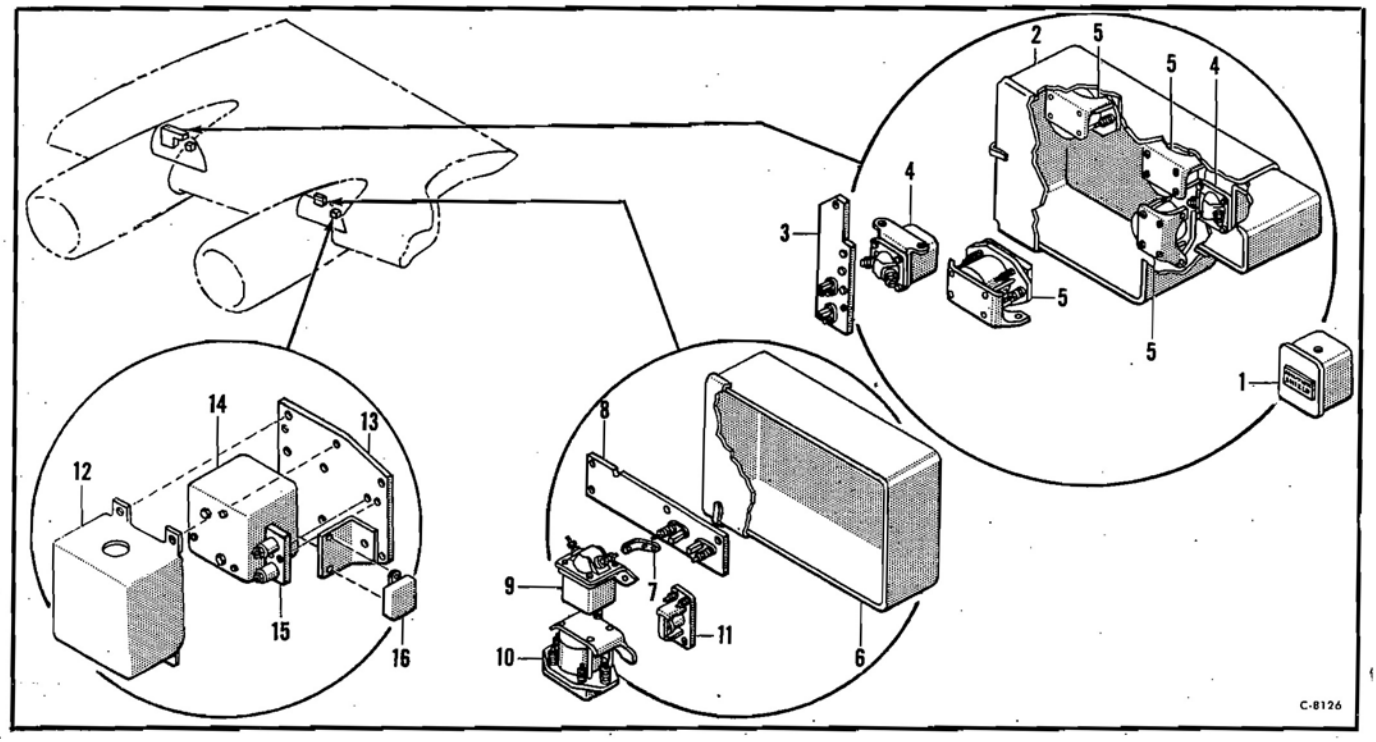

Figure 46—Nacelle Solenoid and Shields

Nacelle Solenoid and Shields

Figure & Index No.	Part Number	1 2 3 4 5 6 7 Nomenclature	Usage Code	Units Per Assy.
		Nacelle Solenoid and Shields		
	15-9270	Installation—Inboard nacelle solenoid (LH) (see fig. 45)	All	NP
	15-9270-1	Installation—Inboard nacelle solenoid (RH) (see fig. 45)	All	NP
46-1	15-9270-6	Shield Assembly (LH)	All	1
	15-9270-7	Shield Assembly (RH)	All	1
	15-9270-14	Shield Assembly (LH)	EA	1
	15-9270-15	Shield Assembly (RH)	EA	1
	15-9270-16	Shield Assembly (LH)	MH	1
	15-9270-17	Shield Assembly (RH)	JH	1
	15-9270-20	Shield Assembly (RH)	VH	1
2	9-4649	Shield Assembly—Inboard nacelle fuse (LH)	CB	1
	9-4649-12	Shield Assembly—Inboard nacelle fuse (RH)	CB	1
3	6-9314-2	Panel Assembly—No. 2 nacelle fuse (LH)	CB	1
	6-9313-5	Panel Assembly—No. 3 nacelle fuse (RH)	JH	1
	6-9313-6	Panel Assembly—No. 3 nacelle fuse (RH)	VH	1
4	NO NUMBER	Solenoid (Spec 94-32181) GFE	All	2
5	NO NUMBER	Solenoid (LH) (Spec 94-32324) (Type B-4) GFE	CB	2
	NO NUMBER	Solenoid (RH) (Spec 94-32324) (Type B-4) GFE	All	3
	NO NUMBER	Solenoid (RH) (Spec 94-32324) (Type B-8) GFE	CB	1
	58-1215	Installation—Outboard nacelle shield (LH) (see fig. 45)	All	NP
	58-1215-1	Installation—Outboard nacelle shield (RH) (see fig. 45)	All	NP
	58-1215-510	Shield Assembly (LH)	EA	1
	58-1215-511	Shield Assembly (RH)	EA	1
	58-1215-519	Shield Assembly (LH)	PH	1
	58-1215-520	Shield Assembly (RH)	PH	1
	58-1215-531	Shield Assembly (LH)	JN	1
	58-1215-532	Shield Assembly (RH)	JN	1
	58-1215-503	Box Assembly (LH)	EA	1
	58-1215-504	Box Assembly (RH)	EA	1
	58-1215-521	Box Asssmbly (LH)	QH	1
	58-1215-522	Box Assembly (RH)	QH	1
6	6-7538	Shield Assembly—Tail wheel solenoid	All	1
7	3-19288	Bus Assembly—Solenoid (LH)	EA	1
	3-19288-1	Bus Assembly—Solenoid (RH)	EA	1
8	56-8983-2	Panel Assembly—Junction fuse (LH)	All	1
	56-8983-3	Panel Assembly—Junction fuse (RH)	All	1
9	NO NUMBER	Switch—Solenoid (Spec 94-32181) (Type D-1) GFE	EA	1
10	NO NUMBER	Relay (Spec 94-32324) (Type B-4) GFE	UB	1
	NO NUMBER	Relay (Spec 94-32324) (Type B-8) GFE	QH	1
11	6041H57	Relay (Cutler-Hammer)	All	1
	7-1958-16	Installation—Generator relay shield (LH) (See fig. 45)	All	NP
	7-1958-15	Installation—Generator relay shield (RH) (see fig. 45)	All	NP
	7-1958-19	Shield Assembly	IC	1
	7-1958-22	Shield Assembly	VO	1
	7-1958-23	Shield Assembly	ZQ	1
12	3-16456-4	Shield Assembly—Generator relay	All	1
	7-1958-5	Bus Assembly	All	1
13	3-16919-5	Panel Assembly—Generator relay	All	1
14	AN3024-1	Relay—Generator control relay GFE	ID	1
	NO NUMBER	Relay (Type 3GTR72E4) GFE	ZQ	1
15	AN3200-2	Shunt—External ammeter GFE	IC	1
16	CA275X	Capacitor (P. R. Mallory)	All	1

RESTRICTED
PUBLISHED BY AVIALOGS.COM

WING

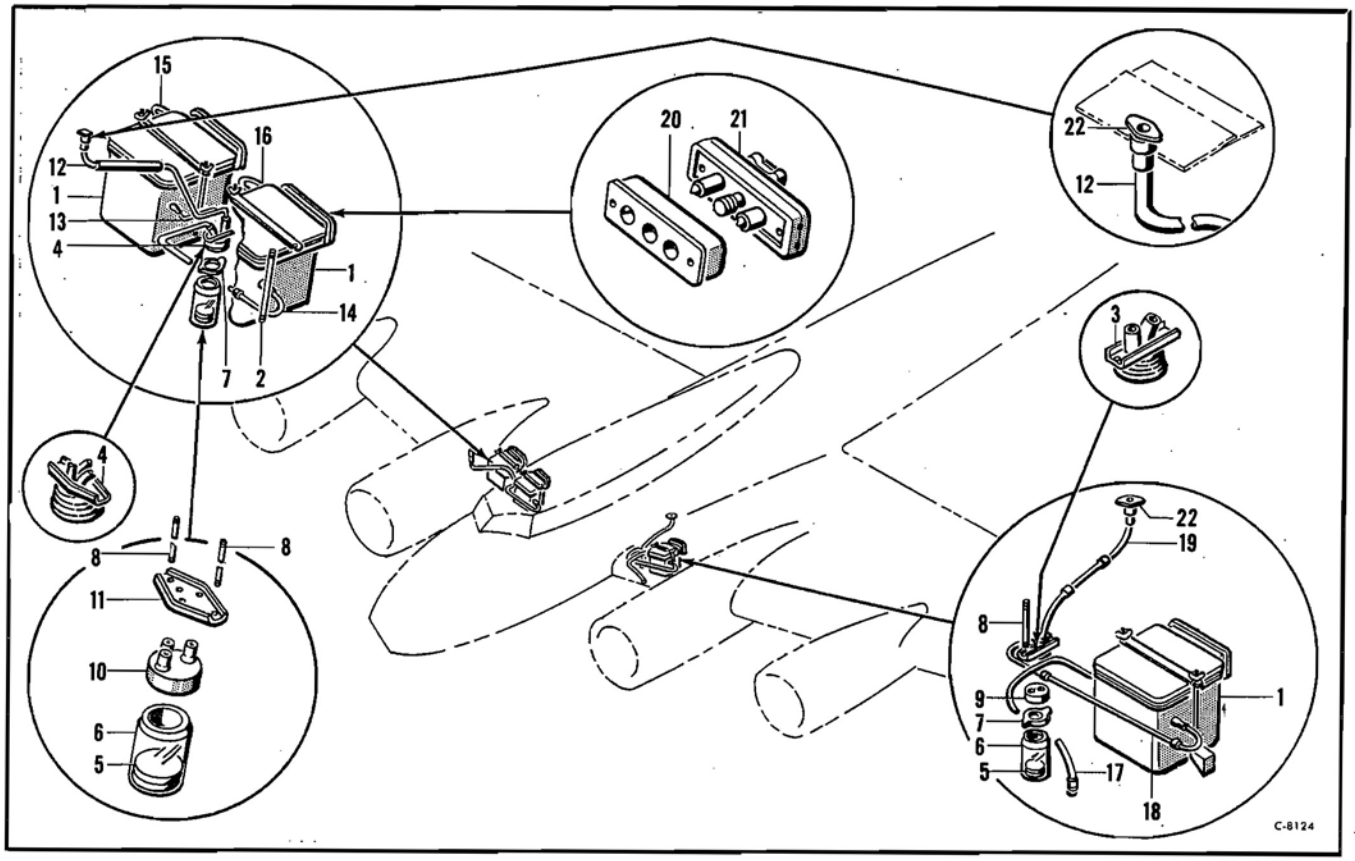

Figure 47—Storage Battery Compartment

Storage Battery Compartment

Figure & Index No.	*Part Number*	*1 2 3 4 5 6 7 Nomenclature*	*Usage Code*	*Units Per Assy.*
		Storage Battery Compartment		
	14-1945	Installation—Battery (LH) (see fig. 44)	All	NP
	14-1945-1	Installation—Battery (RH) (see fig. 44)	All	NP
47-1	AN3150	Battery—24-v 34-amp storage (LH) GFE	All	1
	AN3150	Battery—24-v 34-amp storage (RH) GFE	All	2
2	21-7440-3	Bolt (LH)	All	2
	21-7440-3	Bolt (RH)	All	4
	14-1945-25	Jar Assembly (LH)	All	1
	14-1945-26	Jar Assembly (RH)	All	1
3	3-12926	Cap Assembly—Battery vent (LH)	Y	1
4	3-12964	Cap Assembly—Battery vent (RH)	Y	1
5	14-1945-40	Disc	All	2
6	15465-5D	Jar (Ball Bros. Co.)	All	1
7	15465-6D	Gasket (Ball Bros. Co.)	All	1
8	21-4213-6-4	Rod	All	2
9	6-17011-1	Cap Assembly—Battery vent (LH)	WG	1
10	6-17011	Cap Assembly—Battery vent (RH)	WG	1
11	3-26071	Holder—Battery jar	WG	1
12	14-1945-30	Tube Assembly (RH)	Y	1
	14-1945-60	Tube Assembly (RH)	WG	1
13	14-1945-28	Tube Assembly (RH)	Y	1
	14-1945-58	Tube Assembly (RH)	WG	1
14	14-1945-32	Tube Assembly (RH)	Y	1
	14-1945-62	Tube Assembly (RH)	WG	1
15	14-1945-6	Tube Assembly (RH)	All	1
16	14-1945-15	Tube Assembly (RH)	All	1
17	14-1945-34	Tube Assembly (LH)	All	1
18	14-1945-38	Tube Assembly (LH)	Y	1
	14-1945-50	Tube Assembly (LH)	WG	1
19	14-1945-36	Tube Assembly (LH)	Y	1
	14-1945-48	Tube Assembly (LH)	WG	1
20	11749	Kit—Battery (LH) (Cannon Electric Development Co.) GFE	JL	1
	11749	Kit—Battery (RH) (Cannon Electric Development Co.) GFE	JL	2
21	11751	Plug—Battery (LH) (Cannon Electric Development Co.) GFE	JL	1
	11751	Plug—Battery (RH) (Cannon Electric Development Co.) GFE	JL	2
	43-11344-400	Installation—Battery vent outlet (LH) (see fig. 11)	All	NP
	43-11344-2	Installation—Battery vent outlet (RH) (see fig. 11)	All	NP
22	43-11344-3	Outlet Assembly	All	1

PUBLISHED BY AVIALOGS.COM

WING

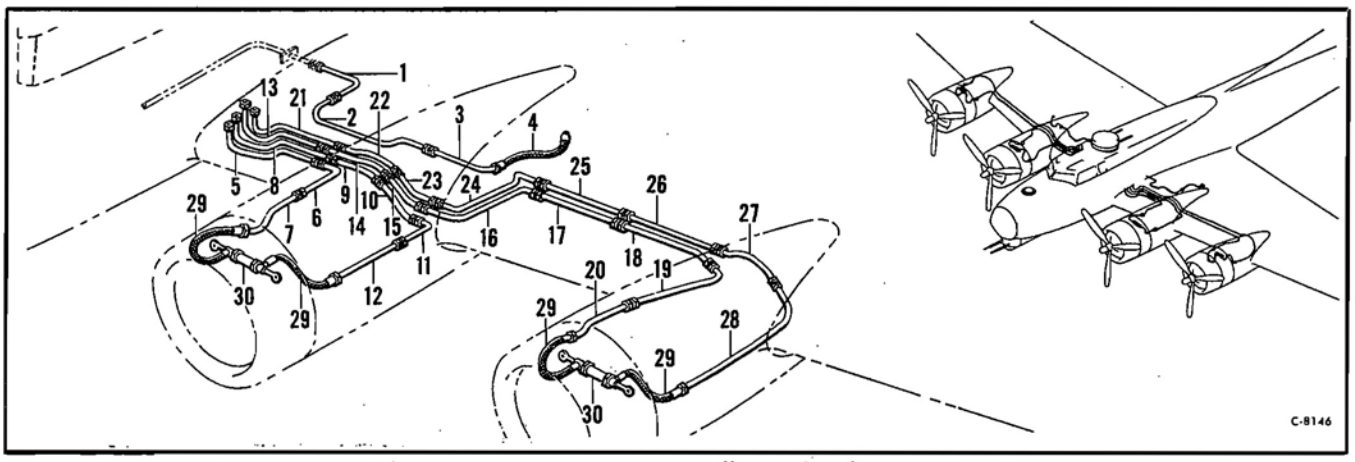

Figure 48—Wing and Nacelle Hydraulic System

Wing and Nacelle Hydraulic System

Figure & Index No.	Part Number	1 2 3 4 5 6 7 Nomenclature	Usage Code	Units Per Assy.
		Wing and Nacelle Hydraulic System		
	15-9272	Installation—Hydraulic system	All	NP
48-1	15-7988-5	Tube Assembly (LH)	All	1
	15-7988-46	Tube Assembly (RH)	QB	1
	15-9272-102	Tube Assembly (RH)	XM	1
2	15-7988-4	Tube Assembly (LH)	All	1
	15-7988-48	Tube Assembly (RH)	QB	1
	15-9272-103	Tube Assembly (RH)	XM	1
3	15-7988-2	Tube Assembly (LH)	QB	1
	15-9272-98	Tube Assembly (LH)	XM	1
	15-7988-51	Tube Assembly (RH)	QB	1
	15-9272-99	Tube Assembly (RH)	XM	1
4	43D2475-8D210	Hose Assembly	MD	2
	39G1030-8-21	Hose Assembly	GE	2
	39B1024-8	Nut—Check	All	2
	55-7689	Installation—Cowl flaps tubing	All	NP
5	15-7689-143	Tube Assembly (LH)	All	1
	15-7689-56	Tube Assembly (RH)	All	1
6	15-7689-145	Tube Assembly (LH)	All	1
	15-7689-132	Tube Assembly (RH)	All	1
7	15-7689-148	Tube Assembly (LH)	All	1
	15-7689-173	Tube Assembly (RH)	All	1
	39B1024-6	Nut	All	8
8	15-7689-114	Tube Assembly (LH)	All	1
	15-7689-8	Tube Assembly (RH)	All	1
9	15-7689-116	Tube Assembly (LH)	All	1
	15-7689-100	Tube Assembly (RH)	All	1
10	15-7689-118	Tube Assembly (LH)	All	1
11	15-7689-119	Tube Assembly (LH)	QB	1
	55-7689-460	Tube Assembly (LH)	XM	1
	15-7689-104	Tube Assembly (replaces 15-7689-118, 119 & 55-7689-460 on RH side)	All	1
12	15-7689-122	Tube Asssmbly (LH)	QB	1
	55-7689-461	Tube Assembly (LH)	XM	1
	15-7689-106	Tube Assembly (RH)	All	1
13	15-7689-77	Tube Assembly (LH)	All	1
	15-7689-130	Tube Assembly (RH)	All	1
14	15-7689-79	Tube Assembly (LH)	All	1
	15-7689-58	Tube Assembly (RH)	All	1
15	15-7689-81	Tube Assembly (LH)	All	1
	15-7689-60	Tube Assembly (RH)	All	1
16	15-7689-82	Tube Assembly (LH)	All	1
	15-7689-62	Tube Assembly (RH)	All	1
17	15-7689-84	Tube Assembly (LH)	All	1
	15-7689-63	Tube Assembly (RH)	All	1
18	15-7689-85	Tube Assembly (LH)	All	1
	15-7689-65	Tube Assembly (RH)	All	1
19	15-7689-89	Tube Assembly (LH)	All	1
	15-7689-68	Tube Assembly (RH)	All	1
20	15-7689-90	Tube Assembly (LH)	All	1
	15-7689-69	Tube Assembly (RH)	All	1
21	15-7689-32	Tube Assembly (LH)	All	1
	15-7689-98	Tube Assembly (RH)	All	1
22	15-7689-34	Tube Assembly (LH)	All	1
	15-7689-10	Tube Assembly (RH)	All	1
23	15-7689-36	Tube Assembly (LH)	All	1
	15-7689-12	Tube Assembly (RH)	All	1
24	15-7689-37	Tube Assembly (LH)	All	1
	15-7689-14	Tube Assembly (RH)	All	1
25	15-7689-39	Tube Assembly (LH)	All	1
	15-7689-15	Tube Assembly (RH)	All	1
26	15-7689-40	Tube Assembly (LH)	All	1
	15-7689-17	Tube Assembly (RH)	All	1
27	15-7689-44	Tube Assembly (LH)	All	1
	15-7689-20	Tube Assembly (RH)	All	1
28	15-7689-48	Tube Assembly (LH)	All	1
	15-7689-24	Tube Assembly (RH)	All	1
29	43D2475-6-330	Hose Assembly	All	8
30	6-9447	Cylinder Assembly—Cowl flap (see fig. 192)	All	Ref

RESTRICTED
PUBLISHED BY AVIALOGS.COM

WING

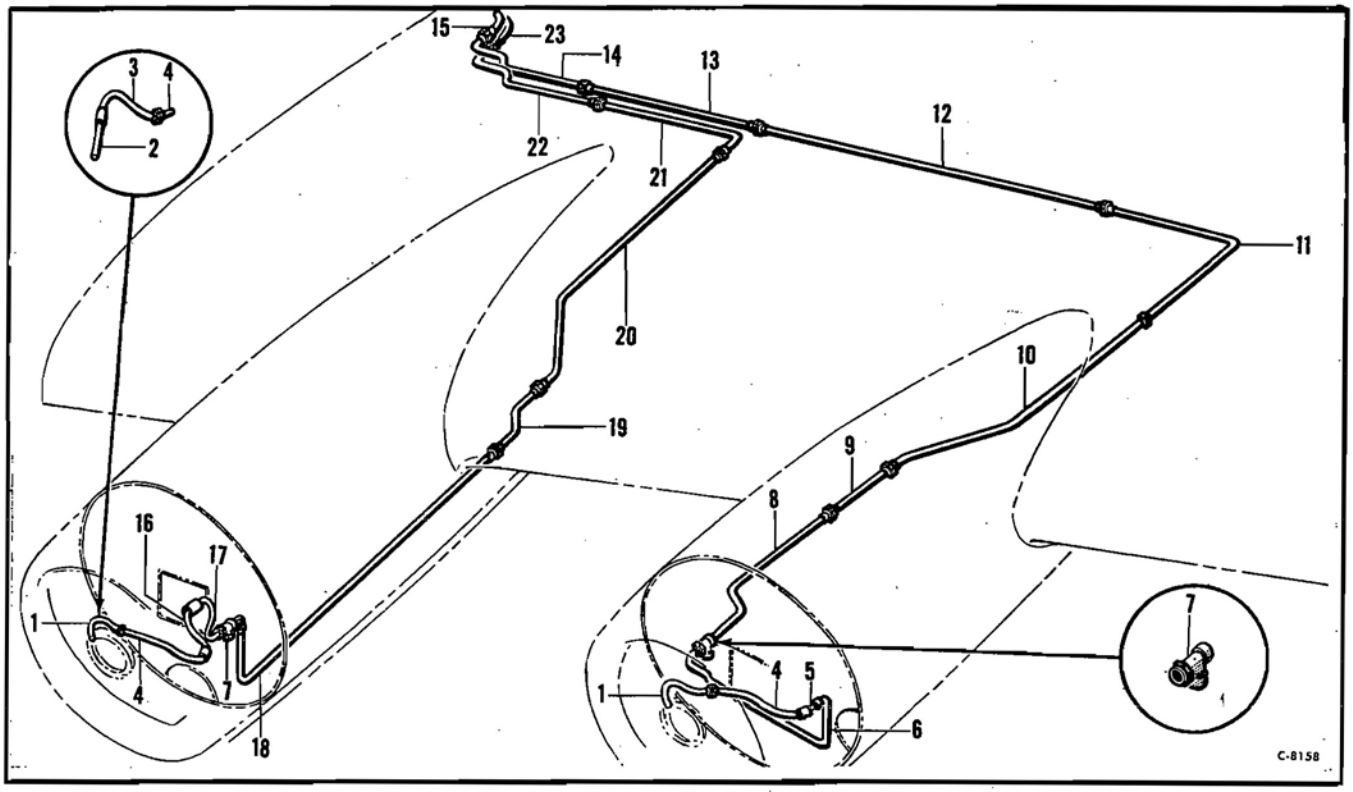

Figure 49—Propeller Anti-icer

Propeller Anti-icer

Figure & Index No.	*Part Number*	*1 2 3 4 5 6 7* *Nomenclature*	*Usage Code*	*Units Per Assy.*
	65-5660	Installation—Propeller anti-icer	All	NP
49-1	65-5660-540	Tube Assembly (anti-icer)	BD	4
2	65-5660-564	Tube Assembly (anti-icer)	KQ	4
3	65-5660-565	Tube Assembly (anti-icer)	KQ	4
4	65-5660-541	Tube Assembly (anti-icer)	All	4
5	65-5660-525	Tube Assembly (to engine no. 1)	All	1
	65-5660-528	Tube Assembly (to engine no. 4)	All	1
6	65-5660-532	Tube Assembly (to engine no. 1)	All	1
	65-5660-535	Tube Assembly (to engine no. 4)	All	1
7	6001DD1-4D	Valve Assembly—Relief (Parker)	All	4
8	65-5660-5	Tube Assembly (to engine no. 1)	QB	1
	65-5660-551	Tube Assembly (to engine no. 1)	XM	1
	65-5660-34	Tube Assembly (to engine no. 4)	QB	1
	65-5660-553	Tube Assembly (to engine no. 4)	XM	1
9	65-5660-530	Tube Assembly (to engine no. 1)	QB	1
	65-5660-550	Tube Assembly (to engine no. 1)	XM	1
	65-5660-54	Tube Assembly (to engine no. 4)	QB	1
	65-5660-552	Tube Assembly (to engine no. 4)	XM	1
10	65-5660-6	Tube Assembly (to engine no. 1 and 4)	All	2
11	65-5660-505	Tube Assembly (to engine no. 1 and 4)	All	2
12	65-5660-506	Tube Assembly (to engine no. 1 and 4)	All	2
13	65-5660-507	Tube Assembly (to engine no. 1 and 4)	QB	2
	65-5660-546	Tube Assembly (to engine no. 1 and 4)	XM	2
14	65-5660-508	Tube Assembly (to engine no. 1 and 4)	QB	2
	65-5660-547	Tube Assembly (to engine no. 1 and 4)	XM	2
15	65-5660-49	Tube Assembly (to engine no. 1 and 4) (see fig. 138)	All	2
16	65-5660-523	Tube Assembly (to engine no. 2)	All	1
	65-5660-539	Tube Assembly (to engine no. 3)	All	1
17	65-5660-526	Tube Assembly (to engine no. 2)	All	1
	65-5660-534	Tube Assembly (to engine no. 3)	All	1
18	65-5660-519	Tube Assembly (to engine no. 2)	QB	1
	65-5660-542	Tube Assembly (to engine no. 2)	XM	1
	65-5660-520	Tube Assembly (to engine no. 3)	QB	1
	65-5660-544	Tube Assembly (to engine no. 3)	XM	1
19	65-5660-518	Tube Assembly (to engine no. 2)	QB	1
	65-5660-543	Tube Assembly (to engine no. 2)	XM	1
	65-5660-545	Tube Assembly (to engine no. 3)	QB	1
	65-5660-517	Tube Assembly (to engine no. 3)	XM	1
20	65-5660-17	Tube Assembly (to engine no. 2)	All	1
	65-5660-537	Tube Assembly (to engine no. 3)	All	1
21	65-5660-509	Tube Assembly (to engine no. 2 and 3)	QB	2
	65-5660-548	Tube Assembly (to engine no. 2 and 3)	XM	2
22	65-5660-510	Tube Assembly (to engine no. 2 and 3)	QB	2
	65-5660-549	Tube Assembly (to engine no. 2 and 3)	XM	2
23	65-5660-51	Tube Assembly (to engine no. 2 and 3) (see fig. 138)	All	2

PUBLISHED BY AVIALOGS.COM

WING

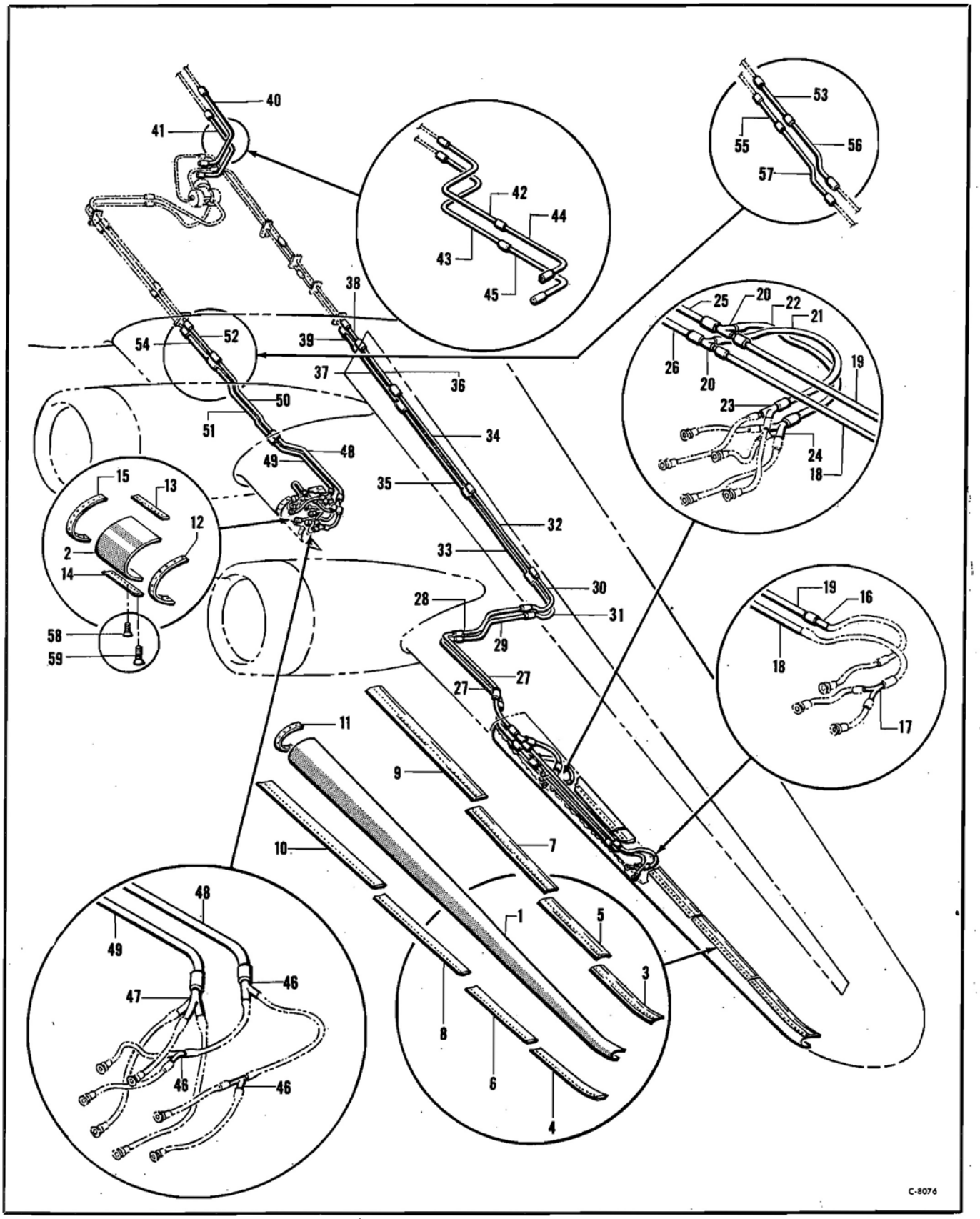

Figure 50—Wing De-icer System

RESTRICTED
PUBLISHED BY AVIALOGS.COM

WING

Wing De-icer System

Figure & Index No.	Part Number	1 2 3 4 5 6 7 Nomenclature	Usage Code	Units Per Assy.
		De-icer System		
	15-7600	Installation—Wing and tail de-icer	All	NP
50-1	FC163-4-1	Boot—LH wing outboard (Goodrich) (2-163-4-1 optional)	All	1
	FC163-4-2	Boot—RH wing outboard (Goodrich) (2-163-4-2 optional)	All	1
2	FC163-10-1	Boot—LH wing inboard (Goodrich) (2-163-10-1 optional)	All	1
	FC163-10-2	Boot —RH wing inboard (Goodrich) (2-163-10-2 optional)	All	1
3	15-7600-159	Fairing—Tip (upper LH and lower RH)	All	2
4	15-7600-160	Fairing—Tip (lower LH and upper RH)	All	2
5	15-7600-161	Fairing—Outboard (upper LH and lower RH)	All	2
6	15-7600-162	Fairing—Outboard (lower LH and upper RH)	All	2
7	15-7600-9	Fairing—Center (upper LH and lower RH)	All	2
8	15-7600-10	Fairing—Center (lower LH and upper RH)	All	2
9	15-7600-11	Fairing—Inboard (upper LH and lower RH)	All	2
10	15-7600-12	Fairing—Inboard (lower LH and upper RH)	All	2
11	15-7600-27	Strap	All	2
12	15-7600-111	Strap—LH outboard	All	1
	15-7600-112	Strap—RH outboard	All	1
13	15-7600-105	Fairing—Upper LH	All	1
	15-7600-106	Fairing—Upper RH	All	1
14	15-7600-107	Fairing—Lower LH	All	1
	15-7600-108	Fairing—Lower RH	All	1
15	15-7600-109	Strap—LH inboard	All	1
	15-7600-110	Strap—RH inboard	All	1
	15-7600-34	Manifold Assembly	All	2
16	41-688-3	Manifold—De-icer	All	1
	15-7600-35	Manifold Assembly	All	2
17	46-6318-402	Manifold Assembly—De-icer	All	1
18	15-7600-150	Tube	All	2
19	15-7600-149	Tube	All	2
20	1-18828	Tee Assembly—45 degree branch	All	4
21	15-7600-151	Tube	All	2
22	15-7600-152	Tube	All	2
	15-7600-39	Manifold Assembly	All	2
23	46-6318-402	Manifold Assembly—De-icer	All	1
	15-7600-30	Manifold Assembly	All	2
24	46-6318	Manifold Assembly—De-icer	All	1
25	15-7600-204	Tube	All	2
26	15-7600-212	Tube	All	2
27	15-7600-203	Tube	All	4
28	15-7600-198	Tube (LH only)	All	1
	15-7600-202	Tube (RH only)	All	1
29	15-7600-206	Tube (LH only)	All	1
	15-7600-210	Tube (RH only)	All	1
30	15-7600-197	Tube (LH only)	All	1
	15-7600-201	Tube (RH only)	All	1
31	15-7600-205	Tube (LH only)	All	1
	15-7600-209	Tube (RH only)	All	1
32	15-7600-69	Tube (LH only)	All	1
	15-7600-79	Tube (RH only)	All	1
33	15-7600-56	Tube (LH only)	All	1
	15-7600-86	Tube (RH only)	All	1
34	15-7600-70	Tube (LH only)	All	1
	15-7600-80	Tube (RH only)	QB	1
	15-7600-249	Tube (RH only)	XM	1
35	15-7600-57	Tube (LH only)	QB	1
	15-7600-247	Tube (LH only)	XM	1
	15-7600-87	Tube (RH only)	QB	1
	15-7600-251	Tube (RH only)	XM	1
36	15-7600-71	Tube (LH only)	QB	1
	15-7600-230	Tube (LH only)	XM	1
37	15-7600-58	Tube (LH only)	QB	1
	15-7600-245	Tube (LH only)	XM	1
38	15-7600-72	Tube (LH only)	QB	1
	15-7600-227	Tube (LH only)	XM	1
39	15-7600-59	Tube (LH only)	QB	1
	15-7600-228	Tube (LH only)	XM	1
40	15-7600-81	Tube (RH only)	QB	1
41	15-7600-88	Tube (RH only)	QB	1
42	15-7600-252	Tube (RH only)	XM	1
43	15-7600-254	Tube (RH only)	XM	1
44	15-7600-225	Tube (RH only)	XM	1
45	15-7600-226	Tube (RH only)	XM	1
	15-7600-117	Manifold Assembly	All	2
46	3-10519-3	Manifold Assembly—De-icer	All	3
	15-7600-113	Manifold Assembly	All	2
47	3-10475-3	Manifold Assembly—De-icer	All	1
48	15-7600-137	Tube (LH only)	QB	1
	15-7600-240	Tube (LH only)	XM	1
	15-7600-142	Tube (RH only)	All	1
49	15-7600-130	Tube (LH only)	QB	1
	15-7600-237	Tube (LH only)	XM	1
	15-7600-29	Tube (RH only)	All	1
50	15-7600-136	Tube (LH only)	QB	1
	15-7600-236	Tube (LH only)	XM	1
	15-7600-141	Tube (RH only)	QB	1
	15-7600-242	Tube (RH only)	XM	1
51	15-7600-129	Tube (LH only)	QB	1
	15-7600-234	Tube (LH only)	XM	1
	15-7600-146	Tube (RH only)	QB	1
	15-7600-239	Tube (RH only)	XM	1
52	15-7600-135	Tube (LH only)	QB	1
53	15-7600-235	Tube (LH only)	XM	1
	15-7600-140	Tube (RH only)	QB	1
	15-7600-241	Tube (RH only)	XM	1
54	15-7600-128	Tube (LH only)	QB	1
55	15-7600-233	Tube (LH only)	XM	1
	15-7600-145	Tube (RH only)	QB	1
	15-7600-238	Tube (RH only)	XM	1
56	15-7600-261	Tube (LH only)	XM	1
57	15-7600-260	Tube (LH only)	XM	1
58	51-1092	Screw—Recessed head (1-2 in. long)	All	1236
59	51-1092-1	Screw—Recessed head (5-8 in. long)	All	18

PUBLISHED BY AVIALOGS.COM

WING

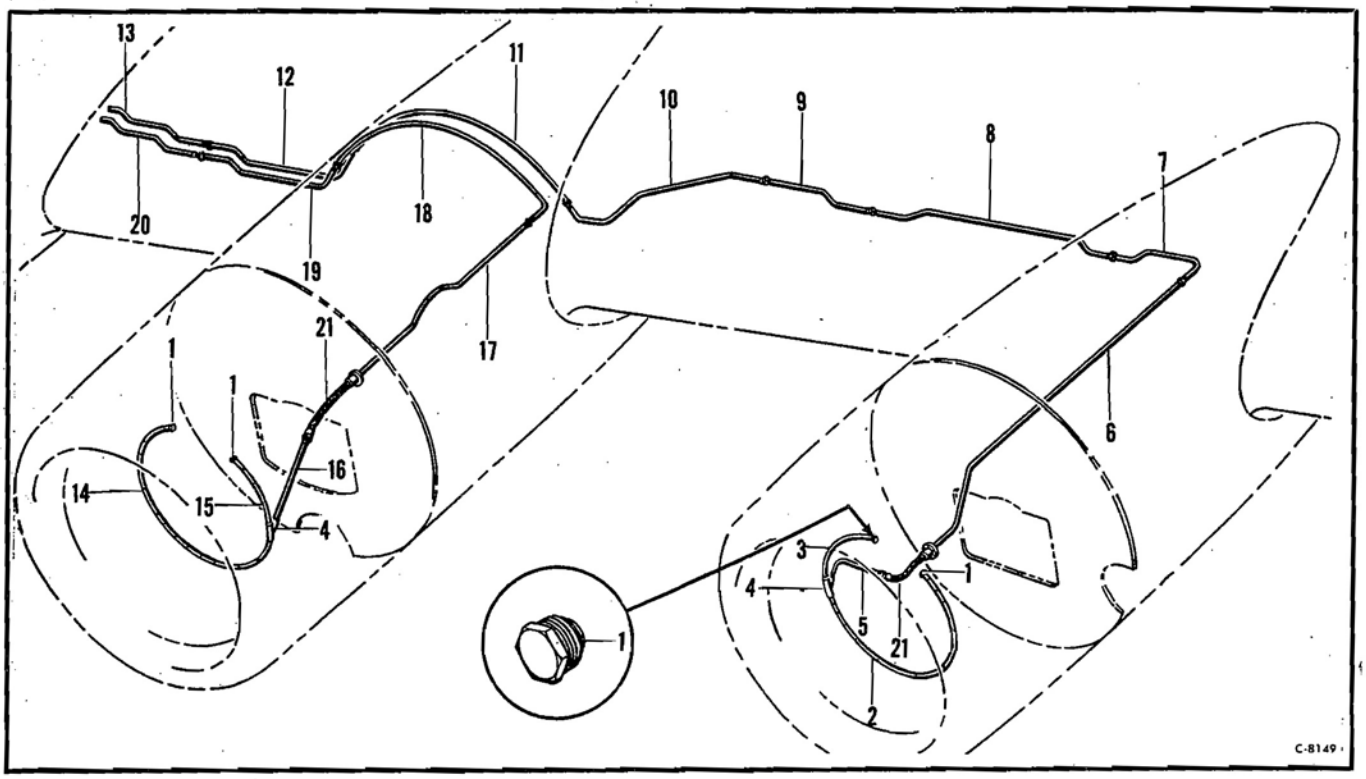

Figure 51—Engine Fire Extinguisher

Engine Fire Extinguisher

Figure & Index No.	Part Number	1 2 3 4 5 6 7 Nomenclature	Usage Code	Units Per Assy.
		Engine Fire Extinguisher		
	65-5679	Installation—Engine fire extinguisher	All	NP
51-1	37A5430	Plug—Carbon dioxide discharge tubing GFE	All	8
2	65-5679-422	Tube Assembly (engine no. 1)	KI	2
	65-5679-607	Tube Assembly (engine no. 1)	XM	2
3	65-5679-421	Tube Assembly (engine no. 3)	KI	2
	65-5679-606	Tube Assembly (engine no. 3)	XM	2
4	811JT8D	Tee	KI	4
	811JT8NS	Tee	XM	4
5	65-5679-526	Tube Assembly (engine no. 1)	KI	1
	65-5679-602	Tube Assembly (engine no. 1)	XM	1
	65-5679-425	Tube Assembly (engine no. 3)	KI	1
	65-5679-604	Tube Assembly (engine no. 3)	XM	1
6	65-5679-411	Tube Assembly (to engine no. 1)	LI	1
	65-5679-543	Tube Assembly (to engine no. 4)	LI	1
7	65-5679-512	Tube Assembly (to engine no. 1)	LI	1
	65-5679-516	Tube Assembly (to engine no. 4)	LI	1
8	65-5679-513	Tube Assembly (to engine no. 1)	LI	1
	65-5679-517	Tube Assembly (to engine no. 4)	LI	1
9	65-5679-555	Tube Assembly (to engine no. 1)	LI	1
	65-5679-572	Tube Assembly (to engine no. 4)	LI	1
10	65-5679-566	Tube Assembly (to engine no. 1)	LI	1
	65-5679-591	Tube Assembly (to engine no. 4)	LI	1
11	65-5679-579	Tube Assembly (to engine no. 1)	LI	1
	65-5679-585	Tube Assembly (to engine no. 4)	LI	1
12	65-5679-581	Tube Assembly (to engine no. 1)	LI	1
	65-5679-583	Tube Assembly (to engine no. 4)	LI	1
13	65-5679-558	Tube Assembly (to engine no. 1) (see fig. 135)	LI	1
	65-5679-570	Tube Assembly (to engine no. 4) (see fig. 135)	LI	1
14	65-5679-550	Tube Assembly (to engine no. 2)	KI	1
	65-5679-609	Tube Assembly (to engine no. 2)	XM	1
	65-5679-553	Tube Assembly (to engine no. 4)	KI	1
	65-5679-611	Tube Assembly (to engine no. 4)	XM	1
15	65-5679-549	Tube Assembly (to engine no. 2)	KI	1
	65-5679-608	Tube Assembly (to engine no. 2)	XM	1
	65-5679-552	Tube Assembly (to engine no. 4)	KI	1
	65-5679-610	Tube Assembly (to engine no. 4)	XM	1
16	65-5679-548	Tube Assembly (to engine no. 2)	KI	1
	65-5679-603	Tube Assembly (to engine no. 2)	XM	1
	65-5679-551	Tube Assembly (to engine no. 4)	KI	1
	65-5679-605	Tube Assembly (to engine no. 4)	XM	1
17	65-5679-439	Tube Assembly (to engine no. 2)	LI	1
	65-5679-448	Tube Assembly (to engine no. 3)	LI	1
18	65-5679-578	Tube Assembly (to engine no. 2)	LI	1
	65-5679-584	Tube Assembly (to engine no. 3)	LI	1
19	65-5679-580	Tube Assembly (to engine no. 2)	LI	1
	65-5679-582	Tube Assembly (to engine no. 3)	LI	1
20	65-5679-559	Tube Assembly (to engine no. 2) (see fig. 135)	LI	1
	65-5679-569	Tube Assembly (to engine no. 3) (see fig. 135)	LI	1
21	37B6535	Tube Assembly—Firewall connector (see figs. 13 & 15)	LI	Ref

PUBLISHED BY AVIALOGS.COM
RESTRICTED

WING

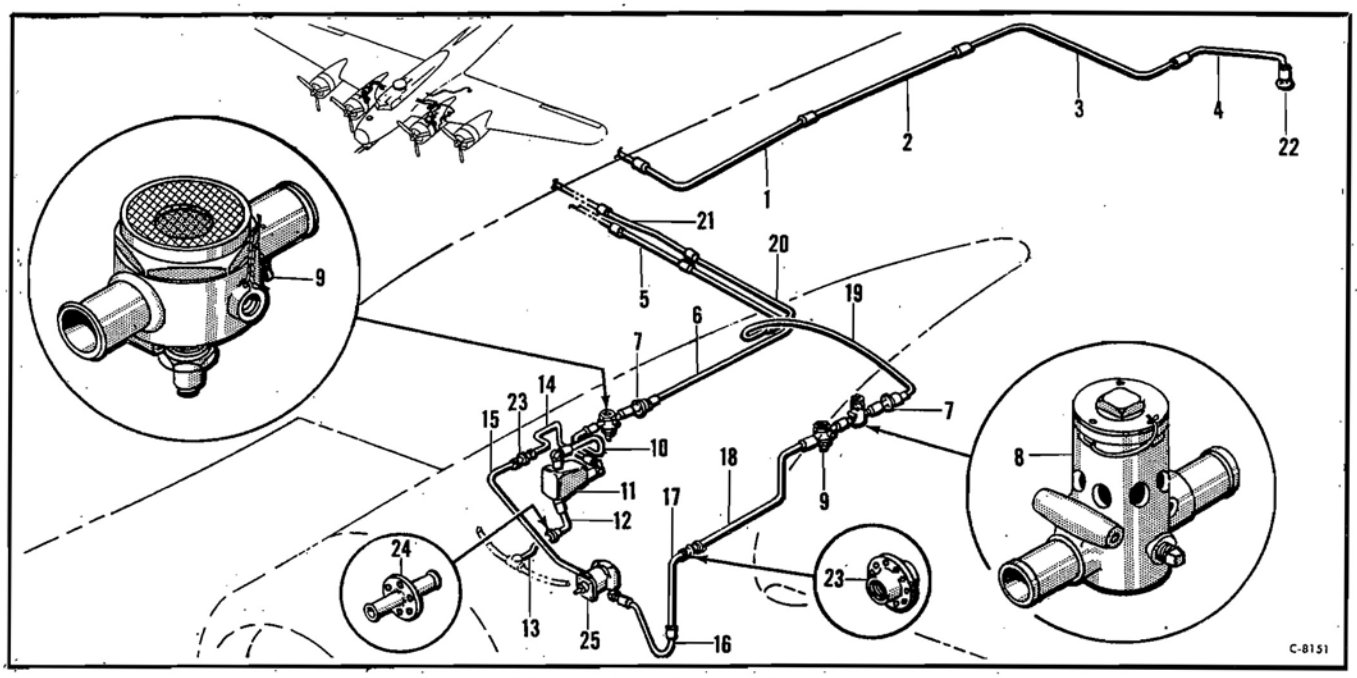

Figure 52—Vacuum System

Vacuum System

Figure & Index No.	Part Number	1 2 3 4 5 6 7 Nomenclature	Usage Code	Units Per Assy.
		Vacuum System		
	65-5594	Installation—Vacuum system tubing	All	NP
52-1	65-5594-587	Tube Assembly (LH)	QB	1
	65-5594-610	Tube Assembly (LH) (Replaces 65-5594-587)	XM	1
	65-5594-611	Tube Assembly (LH) (Replaces 65-5594-587)	XM	1
2	65-5594-588	Tube Assembly (LH)	QB	1
	65-5594-612	Tube Assembly (LH)	XM	1
3	65-5594-512	Tube Assembly (LH)	QB	1
	65-5594-613	Tube Assembly (LH)	XM	1
4	65-5594-548	Tube Assembly (LH)	All	1
5	65-5594-533	Tube Assembly (LH)	All	1
	65-5594-541	Tube Assembly (RH)	QB	1
	65-5594-615	Tube Assembly (RH)	XM	1
6	65-5594-534	Tube Assembly (LH)	All	1
	65-5594-528	Tube Assembly (RH) (replaces 65-5594-534 on RH side)	All	1
	65-5594-529	Tube Assembly (RH) (replaces 65-5594-534 on RH side)	All	1
7	557-5	Valve—Check (Eclipse) (See T.O. 03-35B3)	All	4
8	217HA	Valve Assembly—Safety (Pesco) (see fig. 137)	All	2
9	NO NUMBER	Valve—Relief (Spec 95-28368) (Type B-8) (GFE)	All	4
10	65-5594-589	Tube Assembly (LH)	E	1
	65-5594-605	Tube Assembly (LH)	ZE	1
	65-5594-594	Tube Assembly (RH)	All	1
	6-13686	Installation—Vacuum system separator (LH)	All	NP
	6-13686-1	Installation—Vacuum system separator (RH)	All	NP
	6-13686-2	Separator Assembly	All	1
11	NO NUMBER	Separator—Oil (Spec 95-28368) (Type B-8) (GFE)	All	1
12	65-5594-591	Tube Assembly (LH)	All	1
	65-5594-593	Tube Assembly (RH)	VA	1
	65-5594-618	Tube Assembly (RH)	JK	1
13	65-5594-573	Tube Assembly (LH)	All	1
	65-5594-568	Tube Assembly (RH)	All	1
14	65-5594-590	Tube Assembly (LH)	GO	1
	65-5594-631	Tube Assembly (LH)	RO	1
	65-5594-592	Tube Assembly (RH)	All	1
15	65-5594-564	Tube Assembly (LH)	All	1
	65-5594-567	Tube Assembly (RH)	JA	1
	65-5594-616	Tube Assembly (RH)	MI	1
16	66-5594-563	Tube Assembly (LH)	All	1
	65-5594-569	Tube Assembly (RH)	JA	1
	65-5594-617	Tube Assembly (RH)	MI	1
17	65-5594-561	Tube Assembly (LH)	All	1
	65-5594-562	Tube Assembly (LH)	All	1
	65-5594-570	Tube Assembly (RH) (replaces 65-5594-561 and -562 on RH side)	All	1
19	65-5594-514	Tube Assembly (LH)	All	1
	65-5594-526	Tube Assembly (RH) (replaces 65-5594-514 on RH side)	All	1
	65-5594-525	Tube Assembly (RH) (replaces 65-5594-514 on RH side)	All	1
20	65-5594-536	Tube Assembly (LH)	All	1
	65-5594-524	Tube Assembly (RH)	All	1
21	65-5594-513	Tube Assembly (LH)	All	1
	65-5594-540	Tube Assembly (RH)	QB	1
	65-5594-614	Tube Assembly (RH)	XM	1
22	1-18757	Fitting—Tube end	All	1
23	41-4146-1	Flange	All	4
24	1-21074	Coupling Assembly—Hose flange	All	2
25	NO NUMBER	Pump—Vacuum (Spec 95-28368) (Type B-8) (GFE) (see fig. 177)	All	Ref

PUBLISHED BY AVIALOGS.COM

WING

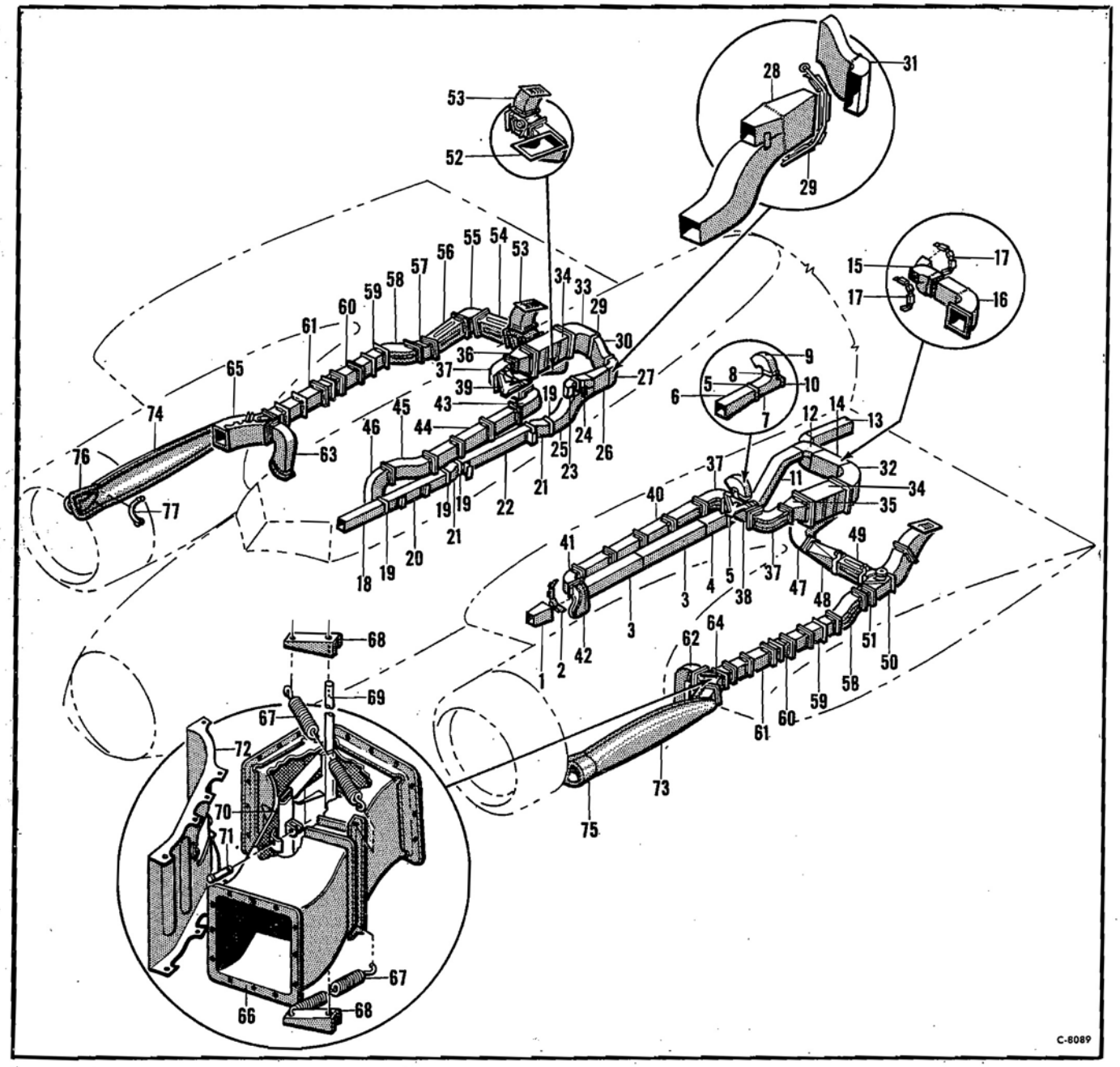

Figure 53—Heating and De-icing System

Heating and De-icing System

Figure & Index No.	Part Number	1 2 3 4 5 6 7 Nomenclature	Usage Code	Units Per Assy.
		Heating and De-icing System		
	15-12723	Installation—Heating and de-icing system	XM	NP
	15-12711	Installation—LH duct station 4-6	XM	NP
53-1	6-14335	Transition Assembly—Heat and vent	XM	1
2	15-17138-16	Clamp Assembly—Duct joint	XP	3
3	6-14310	Duct Assembly—Heat and vent	XM	2
4	6-14315-7	Transition Assembly—Heat and vent	XM	1
5	15-17138-15	Clamp Assembly—Duct joint	XP	2
6	6-13215-5	Transition Assembly—Heat and vent	XM	1
7	6-14272	Tee Assembly—Heat and vent	XM	1
8	15-17138-8	Clamp Assembly—Duct joint	XP	1
9	6-14263	Elbow Assembly—Heat and vent	XM	1
10	15-17138-4	Clamp Assembly—Duct joint	XP	1
11	6-14273	Duct Assembly—Heat and vent	XM	1
12	9-7051	Elbow Assembly—Heat and vent	QM	1
13	6-14307-4	Duct Assembly—Heat and vent	XM	1
	15-12710	Installation—Heat and vent duct	XM	NP

RESTRICTED
PUBLISHED BY AVIALOGS.COM

WING

Heating and De-icing System

Figure & Index No.	Part Number	1 2 3 4 5 6 7 Nomenclature	Usage Code	Units Per Assy.
53-14	15-12710-1	Duct Assembly	QM	1
15	15-12710-10	Duct Assembly—Weld	HO	1
16	15-12710-8	Duct Assembly—Weld	HO	1
17	15-13138-15	Clamp Assembly—Duct joint	HO	2
	15-12763	Installation—RH duct station 4-5C	XM	NP
18	6-14324-5	Duct Assembly—Cabin air	XM	1
19	15-17138-15	Clamp Assembly—Duct joint	XP	5
20	6-14324-7	Duct Assembly—Cabin air	XM	1
21	3-22455	Elbow Assembly—RH cabin air	XM	2
22	6-14467	Duct Assembly—RH cabin air	XM	1
23	3-23171	Elbow Assembly—RH cabin air	XM	1
24	15-17138-11	Clamp Assembly—Duct joint	XD	1
25	6-14391	"V" Assembly—Cabin air	QM	1
26	6-14326	Transition Assembly—RH cabin air	QM	1
27	3-23172	Elbow Assembly—RH cabin air	QM	1
28	15-12763-3	Duct Assembly—Weld	HO	1
29	15-17138-13	Clamp Assembly—Duct joint	XP	2
	9-7221	Installation—RH cabin air duct	XM	NP
30	9-7221-1	Duct Assembly—RH cabin air	QM	1
31	9-7221-10	Duct Assembly—RH cabin air	XM	1
	15-12765	Installation—Secondary heat exchanger LH	XM	NP
	15-12765-1	Installation—Secondary heat exchanger RH	XM	NP
32	9-7050	Elbow Assembly—Heat exchanger (LH)	QM	1
33	6-14341	Elbow Assembly—Exchanger RH	QM	1
	6-14341-10	Elbow Assembly—Exchanger RH	HO	1
	15-12765-2	Exchanger Assembly—Heat (LH)	XM	1
	15-12765-3	Exchanger Assembly—Heat (RH)	XM	1
34	7658E	Exchanger—Heat (McQuay)	XM	1
	15-12756	Installation—Cabin air duct LH	XM	NP
	15-12756-1	Installation—Cabin air duct RH	XM	NP
35	8-2790	Duct Assembly—Cold air (LH)	XM	1
36	8-2790-1	Duct Assembly—Cold air (RH)	XM	1
37	8-2791	Elbow Assembly—Cold air	XM	2
	8-2808	Installation—Cold air valve (LH)	XM	NP
	8-2808-1	Installation—Cold air valve (RH)	XM	NP
38	8-2808-2	Duct Assembly—Cold air (LH) (see fig. 57)	XM	1
39	8-2808-3	Duct Assembly—Cold air (RH) (see fig. 57)	XM	1
40	9-7079	Duct Assembly—Cold air (LH)	XM	1
41	6-8657-10	Elbow Assembly—Cold air (LH)	XM	1
42	9-3267-13	Elbow Asssmbly—Cold air (LH)	XM	1
	15-13018	Installation—Cold air duct RH	XM	NP
43	2-1970	Elbow Assembly—Cold air	XM	1
44	9-7294	Duct Assembly—Cold air	XM	1
45	2-1971	Duct Assembly—Cold air	XM	1
46	2-1969	Elbow Assembly—Cold air	XM	1
	15-12987	Installation—LH primary air duct	XM	NP
47	8-2807-16	Duct Assembly—Transition LH	XM	1
48	2-1960-6	Duct Assembly—Hot air	XM	1
49	9-7268-5	Duct Assembly—Primary air	XM	1
50	12-1148	Installation—Overboard dump valve (see fig. 57)	XM	NP
51	6-15549	Duct Assembly—Primary air	XM	1
	15-12790	Installation—Primary air duct RH	XM	NP
52	8-2792-12	Duct Assembly—Transition RH	XM	1
53	12-1149	Installation—Overboard dump valve (see fig. 57)	XM	NP
54	9-7249-4	Duct Assembly—Primary air	XM	1
55	2-1868	Elbow Assembly—Primary air	XM	1
56	9-7252-4	Duct Assembly—Primary air	XM	1
57	6-14499	Duct Assembly—Primary air	XM	1
	15-12754	Installation—Primary air duct LH	XM	NP
	15-12754-1	Installation—Primary air duct RH	XM	NP
58	8-2788-6	Duct Assembly—Primary air	XM	1
59	6-14406	Duct Assembly—Primary air	XM	1
60	7-2092-7	Duct Assembly—Primary air	XM	1
61	9-7080-7	Duct Assembly—Primary air	XM	1
	15-12995	Installation—Primary air duct LH	XM	NP
	15-12995-1	Installation—Primary air duct RH	XM	NP
62	8-2827	Duct Assembly—Overboard dump (LH)	XM	1
63	8-2827-1	Duct Assembly—Overboard dump (RH)	XM	1
64	15-16026	Valve Assembly—Primary heat (LH)	NM	1
	15-16026-2	Valve Assembly—Primary heat (LH)	LN	1
65	15-16026-1	Valve Assembly—Primary heat (RH)	NM	1
	15-16026-3	Valve Assembly—Primary heat (LH)	LN	1
	15-13031-32	Valve Assembly—Primary heat (LH)	NM	1
	15-13031-36	Valve Assembly—Primary heat (LH)	LN	1
	15-13031-31	Valve Assembly—Primary heat (RH)	NM	1
	15-13031-37	Valve Assembly—Primary heat (RH)	LN	1
66	15-13031-22	Duct Assembly (LH)	NM	1
	15-13031-40	Duct Assembly (LH)	LN	1
	15-13031-23	Duct Assembly (RH)	NM	1
	15-13031-41	Duct Assembly (RH)	LN	1
67	1-29329-1	Spring—Dump valve	XM	2
68	3-23881	Lever—Door release	XM	2
69	15-13031-17	Shaft	XM	1
70	6-14444-9	Door Assembly—Dump valve	XM	1
71	1-29348	Pin—Fusible	XM	1
72	2-2092	Shield Assembly—Primary air duct	XM	1
	15-12952	Installation—Primary air scoop LH	XM	NP
	15-12952-1	Installation—Primary air scoop RH	XM	NP
73	14-3674-15	Shroud Assembly—Primary air (LH)	XM	1
74	14-3674-16	Shroud Assembly—Primary air (RH)	XM	1
75	15-12978-17	Scoop Assembly—Primary air (LH)	XM	1
76	15-12978-18	Scoop Assembly—Primary air (RH)	XM	1
77	3-26499-1	Strap	XM	1
	15-13037	Installation—Cabin heat control (see fig. 57)	XM	NP

PUBLISHED BY AVIALOGS.COM

WING

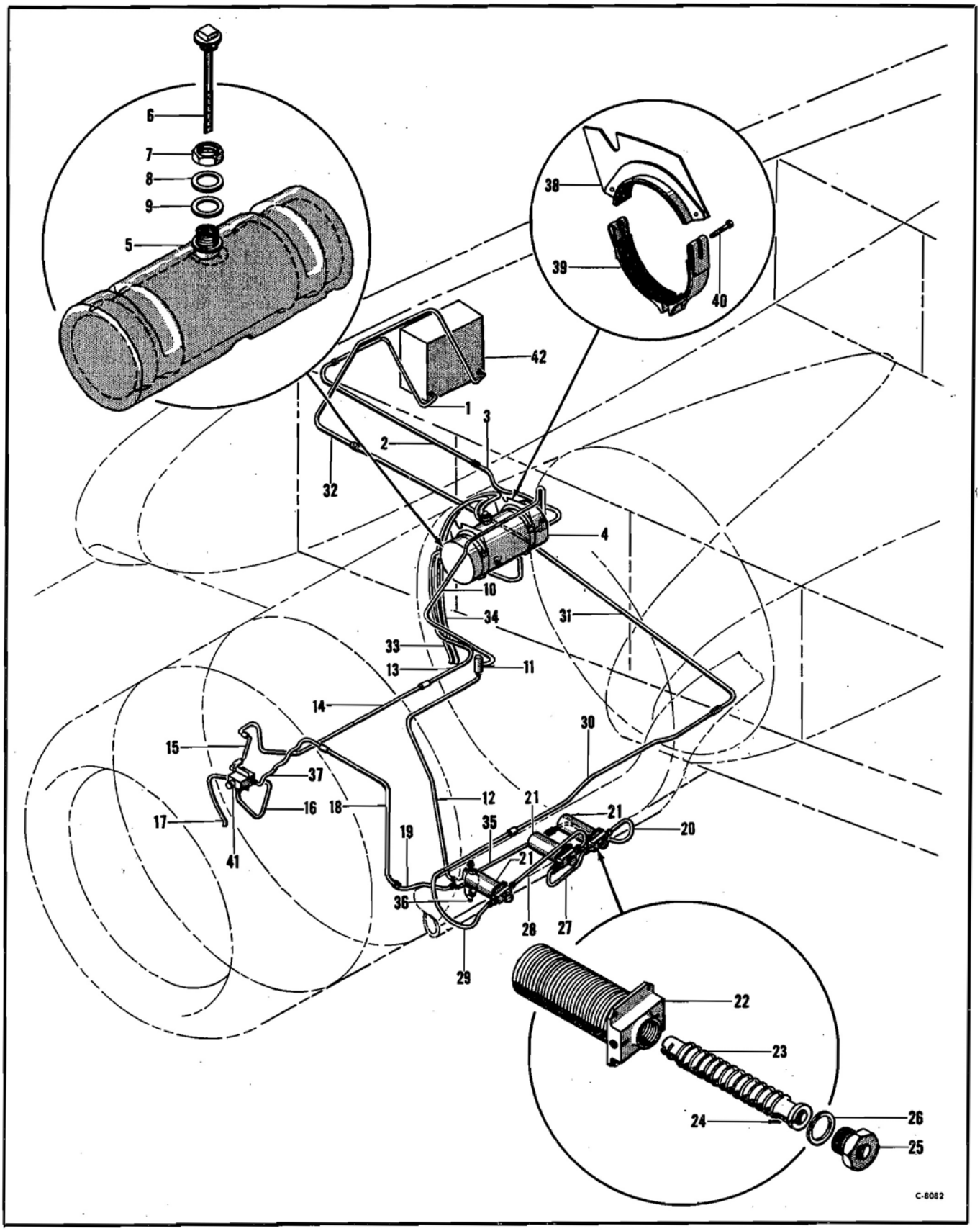

Figure 54—Glycol System

RESTRICTED
PUBLISHED BY AVIALOGS.COM

WING

Glycol System

Figure & Index No.	Part Number	1 2 3 4 5 6 7 Nomenclature	Usage Code	Units Per Assy.
		Glycol System		
	85-6691	Installation—Glycol system	QB	NP
54-1	65-6691-3	Tube Assembly	QB	1
2	65-6691-4	Tube Assembly	QB	1
3	85-6691-714	Tube Assembly	QB	1
4	85-6691-716	Tank Assembly	QB	1
5	9-3268	Tank Assembly—Insulated	QB	1
6	1-16658	Gage	QB	1
7	85-6691-719	Nut	QB	1
8	21-2363-128-86	Washer	QB	1
9	65-6691-6	Gasket—Vellumoid	QB	AR
10	85-6691-718	Tube Assembly	QB	1
	85-6691-717	Valve Unit Assembly	QB	1
11	10-2142-15	Valve Assembly—Pressure relief (Parker) (see fig. 55)	QB	1
12	75-6691-606	Tube Assembly	QB	1
13	85-6691-709	Tube Assembly	T	1
	85-6691-723	Tube Assembly	KG	1
14	75-6691-609	Tube Assembly	T	1
	85-6691-722	Tube Assembly	KG	1
15	85-6691-710	Tube Assembly	QB	1
16	85-6691-712	Tube Assembly	QB	1
17	75-6691-604	Tube Assembly	QB	1
18	85-6691-708	Tube Assembly	QB	1
19	85-6691-700	Tube Assembly	QB	1
20	65-6691-503	Tube Assembly	QB	1
21	69-2423	Heater Assembly	QB	3
22	69-2423-605	Cylinder	QB	1
23	69-2423-601	Spindle	QB	1
24	69-2423-602	Pin	QB	1
25	69-2423-606	Cap	QB	1
26	69-2423-607	Washer	QB	1
27	65-6691-18	Tube Assembly	QB	1
28	65-6691-19	Tube Assembly	QB	1
29	65-6691-15	Tube Assembly	QB	1
30	65-6691-20	Tube Assembly	QB	1
31	65-6691-21	Tube Assembly	QB	1
32	65-6691-22	Tube Assembly	QB	1
33	65-6691-9	Tube Assembly	QB	1
34	65-6691-10	Tube Assembly	QB	1
35	85-6691-701	Tube Assembly	QB	1
	6-10445	Installation—Filter	QB	NP
	6-10445-1	Filter Assembly	QB	1
36	27250	Purolator Assembly (Type G159J18) (Purolator Products) (see fig. 55)	QB	1
37	39G1030-8-16	Hose Assembly (43D2475-8D160 alternate)	QB	1
	9-3265	Installation—Glycol tank bracket (see fig. 13)	QB	NP
38	9-3265-1	Bracket Assembly	QB	2
39	9-3265-5	Strap Assembly	QB	4
40	AN3-12	Bolt—Aircraft	QB	4
	AN310-3	Nut—Aircraft castle	QB	4
41	RD4550	Pump Assembly—Glycol (Romec) (see AN03-35A-6) (see fig. 177)	QB	Ref
42	65-6705	Installation—Cabin heating unit and cable (see fig. 143)	QB	NP

PUBLISHED BY AVIALOGS.COM

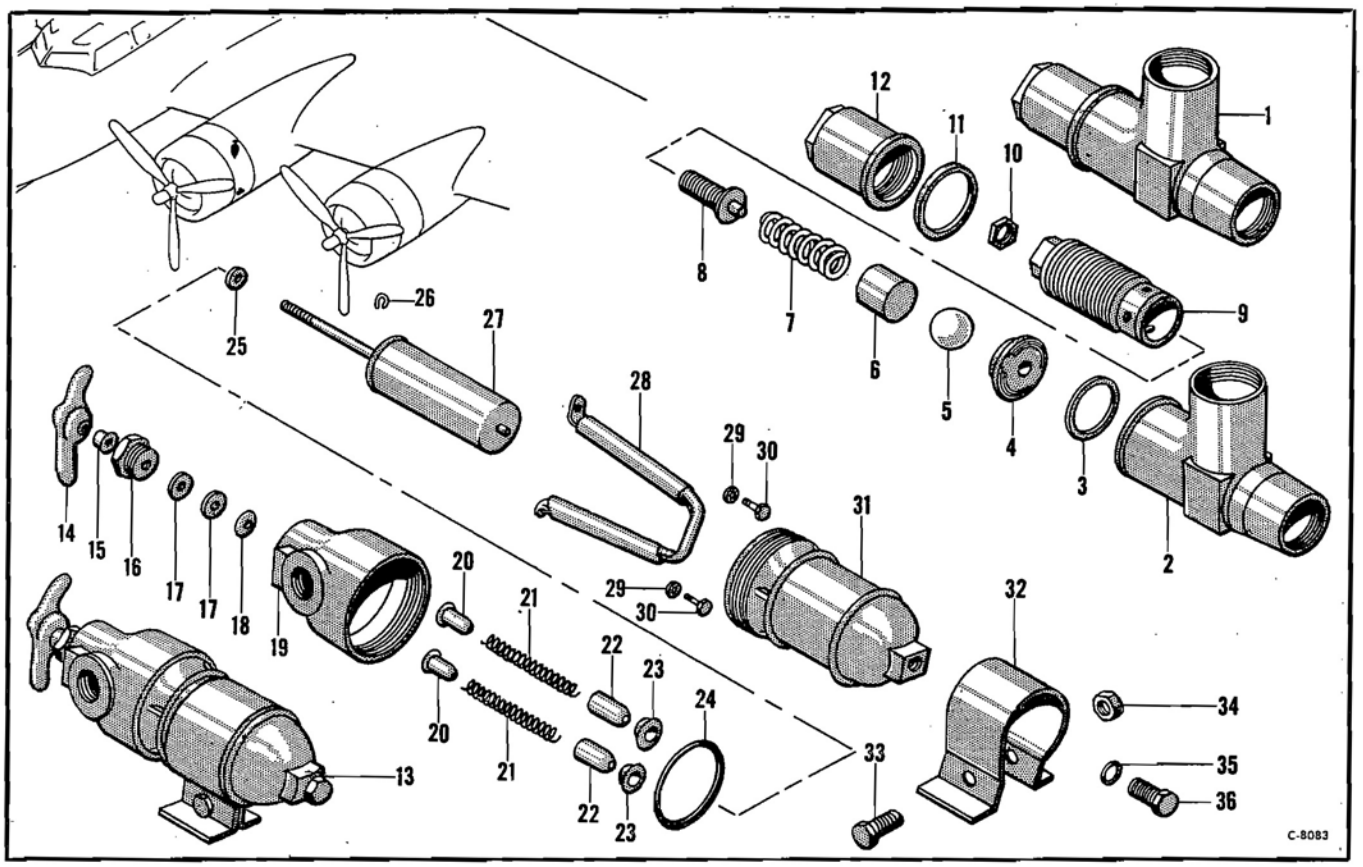

Figure 55—Pressure Relief Valve Assembly and Purolator Assembly

Pressure Relief Valve Assembly and Purolator Assembly

Figure & Index No.	Part Number	1 2 3 4 5 6 7 Nomenclature	Usage Code	Units Per Assy.
		Pressure Relief Valve Assembly and Purolator Assembly		
55-1	10-2142-15	Valve Assembly—Pressure relief (Parker) (see fig. 54)	QB	Ref
2	10-1542-21D3	Body	QB	1
3	4-1640-18-21D12	Seat—Inserted	QB	1
4	10-1342-4SS10	Gasket—Seat	QB	1
5	12-1241-13-16SS9	Ball	QB	1
6	10-1342-5SS10	Sleeve	QB	1
7	5-941-11SS8	Spring	QB	1
8	10-1842-5SS10	Screw—Adjusting	QB	1
9	10-1342-6SS10	Bushing	QB	1
10	9-2039-5D1	Nut—Lock	QB	1
11	8-1142-13-10D12	Gasket	QB	1
12	10-1442-3D1	Cap	QB	1
	41-1042-34-3	Plug	QB	2
13	27250	Purolator Assembly—Type G159J18 (Purolator Products) (see fig. 54 and 121)	All	Ref
14	24412	Handle Assembly	All	1
15	24335	Nut	All	1
16	26488	Plug—Stuffing box packing	All	1
17	AN6225-3	Packing—"V" ring hydraulic	All	2
18	AN6229-3	Adapter—"V" ring male hydraulic packing	All	1
19	27383	Head	All	1
20	25660	Guide—Spring	All	2
21	25663	Spring—Relief valve	All	2
22	25664	Piston—Relief valve	All	2
23	25665	Seat—Valve	All	2
24	AN6230-6	Gasket—"O" ring hydraulic	All	1
25	25320	Cap—Retainer	All	1
26	25321	Retainer—Drive shaft	All	1
27	25444	Element Assembly	All	1
28	25449	Knife and Frame Assembly	All	1
29	24433	Washer—Number 10 lock	All	2
30	AN500C10-4	Screw—Fillister machine head	All	2
31	25286	Case	All	1
32	25473	Bracket	All	1
33	25547	Screw—Hex head cap	All	1
34	AN365D428	Nut—Self-locking	All	1
35	25667	Gasket—Drain plug	All	1
36	25668	Plug—Drain	All	1

RESTRICTED
PUBLISHED BY AVIALOGS.COM

WING

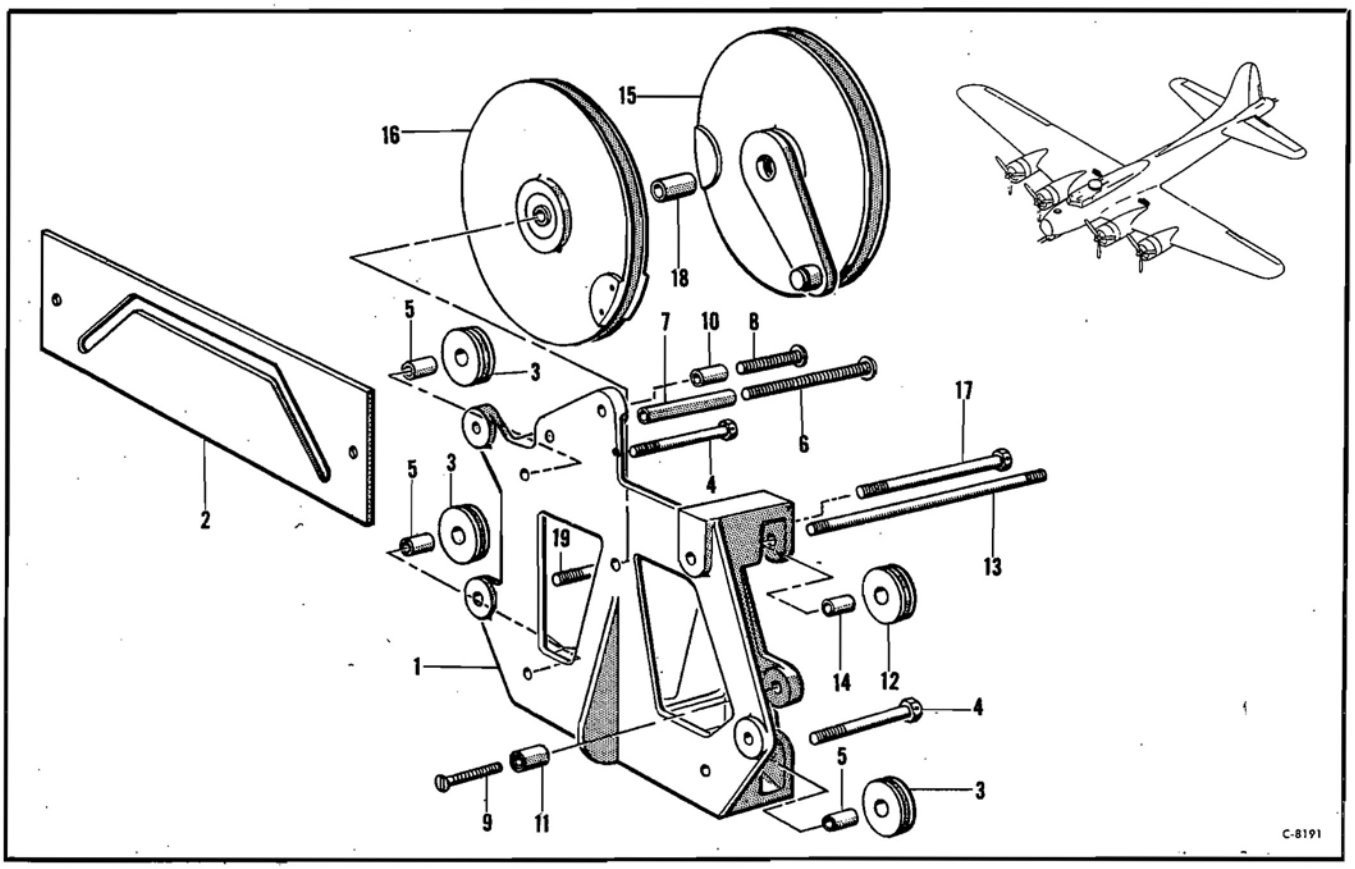

Figure 56—Cabin Heat Control Bracket

Cabin Heat Control Bracket

Figure & Index No.	*Part Number*	*1 2 3 4 5 6 7 Nomenclature*	*Usage Code*	*Units Per Assy.*
	15-12965	Installation—Cabin heat control bracket (LH) (see fig. 9)	XM	NP
	15-12965-1	Installation—Cabin heat control bracket (RH) (see fig. 9)	XM	NP
	15-12965-2	Bracket Assembly (LH) (see fig. 57)	XM	1
	15-12965-3	Bracket Assembly (RH) (see fig. 57)	XM	1
56-1	15-12964	Bracket—Cabin heat control (LH)	XM	1
	15-12964-1	Bracket—Cabin heat control (RH)	XM	1
2	6-14481	Plate—Cabin heat control	XM	1
3	3-23596	Roller—Cabin heat control	XM	3
4	AN3-20	Bolt—Aircraft	XM	3
5	BAC274S3-30	Bushing	XM	3
6	AN520-10-40	Screw—Round head	XM	1
7	BAC1603-112	Spacer	XM	1
8	AN520-10-20	Screw—Round head	XM	2
9	AN510-10-20	Screw—82 degree flat head (LH)	XM	1
	AN510-10R20	Screw—82 degree flat head (RH)	XM	1
10	BAC1603-32	Spacer	XM	1
11	3-21442-11	Spacer—Number 10 flat head screw	XM	1
12	3-23596	Roller	XM	1
13	1-22900-10	Stud—10-32 special	XM	1
14	BAC274S3-30	Bushing	XM	1
15	6-15264-2	Sheave Assembly—Heat control (LH)	XM	1
	6-15264	Sheave Assembly—Heat control (RH)	XM	1
16	6-15264-3	Sheave Assembly—Heat control (LH)	XM	1
	6-15264-1	Sheave Assembly—Heat control (RH)	XM	1
	6-15264-4	Lever Assembly	XM	1
	B55	Bearing—Needle (Torrington)	XM	1
	6-15264-5	Sheave Assembly	XM	1
	A207D4	Bearing	XM	1
17	AN4-26	Bolt—Aircraft	XM	1
18	BAC1604-38	Spacer	XM	1
19	AN3-33A	Bolt—Aircraft	XM	3
	AN4-33A	Bolt—Aircraft (RH)	XM	1

PUBLISHED BY AVIALOGS.COM

WING

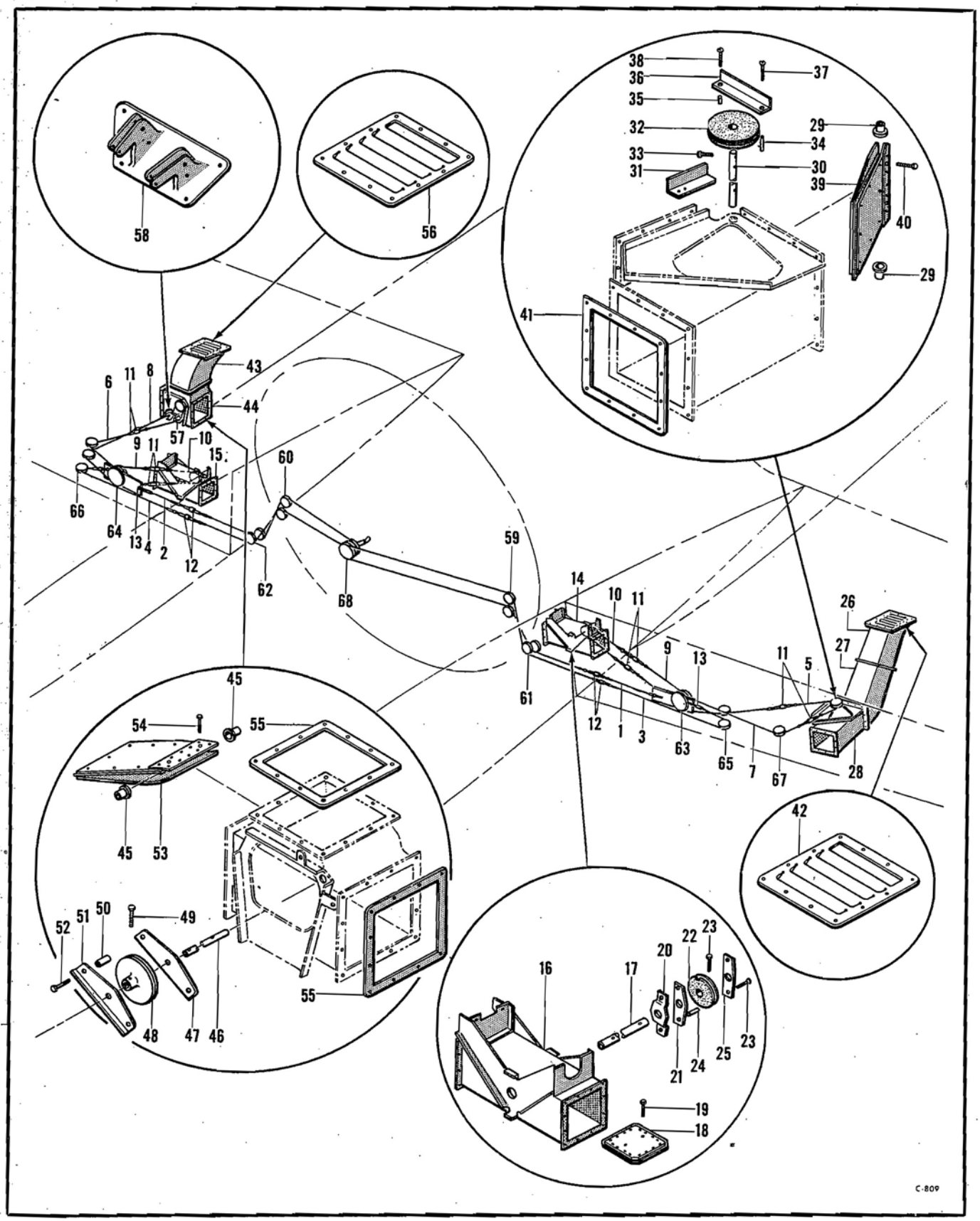

Figure 57—Cabin Heat Control

PUBLISHED BY AVIALOGS.COM

WING

Cabin Heat Control

Figure & Index No.	Part Number	1 2 3 4 5 6 7 Nomenclature	Usage Code	Units Per Assy.
		Cabin Heat Control		
	15-13037	Installation—Cabin heat control (see fig. 53)	XM	NP
57-1	15-13037-1	Cable Assembly (LH)	XM	1
2	15-13037-5	Cable Assembly (RH)	XM	1
3	15-13037-3	Cable Assembly (LH)	XM	1
4	15-13037-7	Cable Assembly (RH)	XM	1
5	BAC1833J74-194	Cable Assembly (LH)	XM	1
6	BAC1833G388-776	Cable Assembly (RH)	XM	1
7	BAC1833G458-940	Cable Assembly (LH)	XM	1
8	BAC1833J230-463	Cable Assembly (RH)	XM	1
9	BAC1833G106-256	Cable Assembly	XM	2
10	BAC1833J106-256	Cable Assembly	XM	2
11	AN155-16S	Barrel—Turnbuckle	XM	8
12	AN155-16L	Barrel—Turnbuckle	XM	4
13	AN665-21R	Terminal—Clevis type tie rod	XM	4
14	8-2808-2	Duct Assembly—Cold air (LH) (see fig. 53)	XM	Ref
15	8-2808-3	Duct Assembly—Cold air (RH) (see fig. 53)	XM	Ref
16	8-2808-9	Duct	XM	1
17	3-22490	Shaft—Cold air valve (LH only)	XM	1
	3-22490-1	Shaft—Cold air valve (RH only)	XM	1
18	6-15295	Vane Assembly—Cold air duct	XM	1
19	AN3-7A	Bolt—Aircraft	XM	2
	AN365-1032	Nut—Self-locking	XM	5
20	1-29337	Bracket—Cable guard	XM	1
21	1-29338	Plate—Cable guard	XM	1
22	3-23593	Sheave—Cabin heat control	XM	1
23	AN3-14A	Bolt—Aircraft	XM	3
24	BAC1603-64	Spacer	XM	2
25	1-29322	Angle—Cable guard	XM	1
	12-1148	Installation—Overboard dump valve (see fig. 53)	XM	NP
26	12-1148-1	Duct Assembly—Overboard dump (upper)	XM	1
27	12-1148-6	Duct Assembly—Overboard dump (middle)	XM	1
28	12-1148-13	Duct Assembly—Overboard dump (lower)	XM	1
29	BAC340-8-970	Bushing—Staked	XM	2
30	3-23884	Tube—Valve shaft	XM	1
31	3-23883	Angle—Valve assembly	XM	1
32	3-23595	Sheave—Cabin heat control	XM	1
33	AN3-13A	Bolt—Aircraft	XM	1
	363-1032	Nut—High self-locking	XM	2
34	BAC1603-69	Spacer	XM	1
35	BAC1603-30	Spacer	XM	1
36	3-23885	Angle—Valve assembly	XM	1
37	AN520-10R24	Screw—Round head	XM	1
38	AN520-10R14	Screw—Round head	XM	1
39	6-15270-2	Valve Assembly—Hot air duct	XM	1
40	AN3-10	Bolt—Aircraft	XM	2
	AN310-3	Nut—Aircraft castle	XM	2
41	6-14405-1	Gasket—Hot air duct	XM	1
42	6-16389	Louver—Overboard dump	XM	1
	12-1149	Installation—Overboard dump valve (see fig 53)	XM	NP
43	12-1149-7	Duct Assembly—Overboard dump valve	XM	1
44	12-1149-1	Valve Assembly—Overboard dump	XM	1
45	BAC340-8-970	Bushing—Staked	XM	2
46	3-23818	Tube—Valve Assembly	XM	1
47	3-22487-1	Reinforcer—Hot air valve	XM	1
48	3-23595	Sheave	XM	1
49	AN3-13A	Bolt—Aircraft	XM	1
	363-1032	Nut—High self-locking	XM	3
50	BAC1603-65	Spacer	XM	2
51	3-22487	Reinforcer—Hot air valve	XM	1
52	AN3-14A	Bolt—Aircraft	XM	2
	AN960-10	Washer—Plain	XM	4
53	6-15270-3	Valve Assembly—Hot air duct	XM	1
54	AN3-10	Bolt—Aircraft	XM	2
	AN310-3	Nut—Aircraft castle	XM	2
55	6-14405-1	Gasket—Hot air duct	XM	2
56	6-16389	Louver—Overboard dump	XM	1
	9-7256	Installation—Heat control bracket	XM	NP
57	9-7256-1	Bracket Assembly	XM	1
58	9-7255	Bracket—Cabin heat control	XM	1
59	9-7312-1	Bracket Assembly—Cabin heat control (LH) (see fig. 69)	XM	Ref
60	9-7281-1	Bracket Assembly—Cabin heat control (RH) (see fig. 69)	XM	Ref
61	9-7306-1	Bracket Assembly—Heat control (LH) (see fig. 71)	XM	Ref
62	6-15541-2	Bracket Assembly—Cabin heat control (RH) (see fig. 71)	XM	Ref
63	15-12965-2	Bracket Assembly—Cabin heat control (LH) (see fig. 56)	XM	Ref
64	15-12965-3	Bracket Assembly—Cabin heat control (RH) (see fig. 56)	XM	Ref
65	9-7298-1	Bracket Assembly—Cabin heat control (LH) (see fig. 9)	XM	Ref
66	9-7257-1	Bracket Assembly—Heat control (RH) (see fig. 9)	XM	Ref
67	6-15544-1	Bracket Assembly—Heat control (LH) (see fig. 9)	XM	Ref
68	15-13013	Installation—Cabin heat stand (see fig. 69 and 144)	XM	NP

PUBLISHED BY AVIALOGS.COM

TAIL

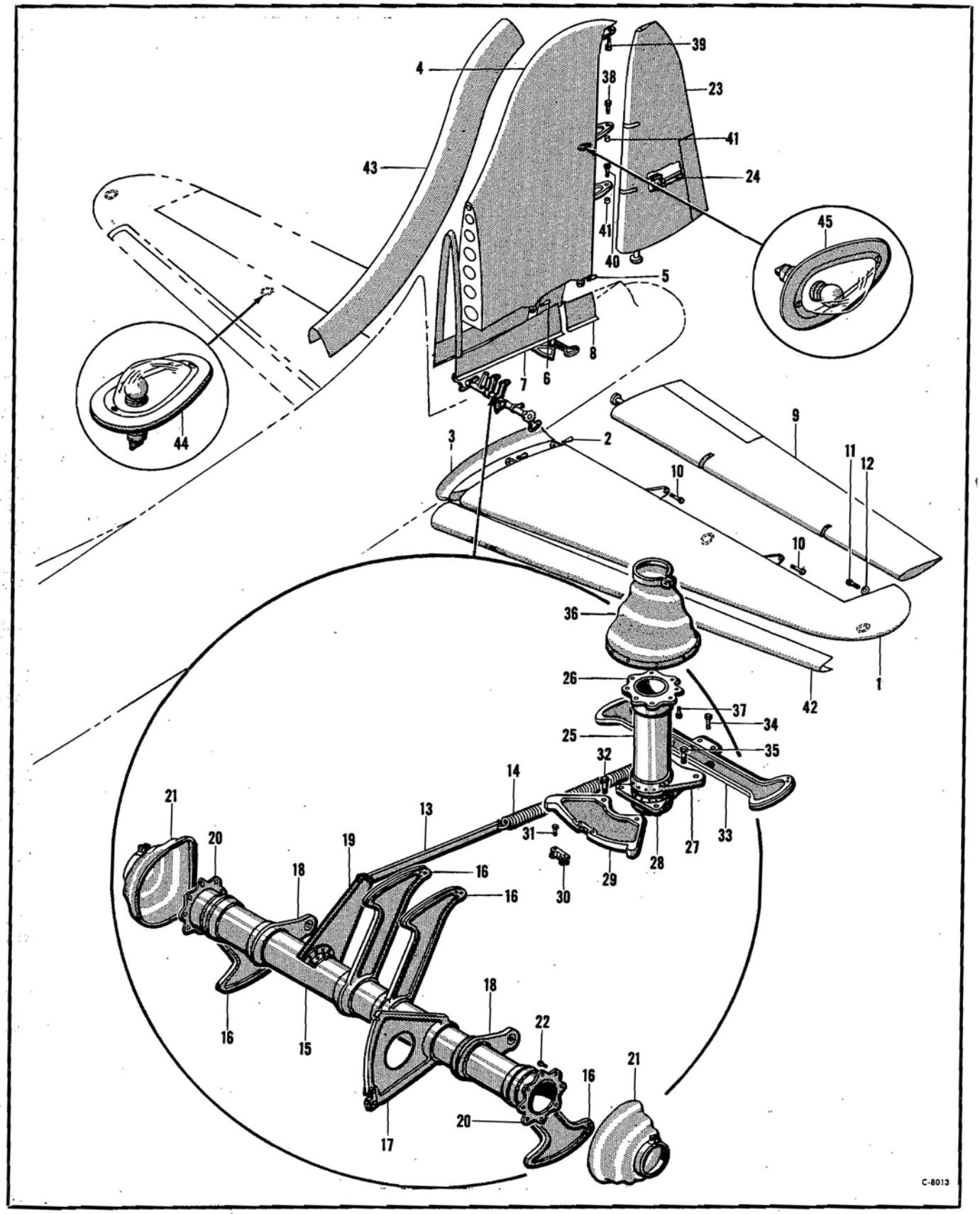

Figure 58—Tail Surfaces

PUBLISHED BY AVIALOGS.COM

TAIL

Tail Surfaces

Figure & Index No.	Part Number	1 2 3 4 5 6 7 Nomenclature	Usage Code	Units Per Assy.
		Tail Surfaces		
	15-7324-2	Installation—Control surface	All	NP
58-1	15-7025	Stabilizer Assembly—LH (see fig. 59)	UA	1
	15-7025-1	Stabilizer Assembly—RH (see fig. 59)	UA	1
	15-7025-134	Stabilizer Assembly—LH (see fig. 59)	EK	1
	15-7025-140	Stabilizer Assembly—RH (see fig. 59)	EK	1
2	AN386-5-23A	Pin—Threaded taper	All	16
	AN364-624	Nut—Thin self-locking	All	16
	AN975-6	Washer—Taper pin	All	16
3	15-7632	Installation—Stabilizer gap cover LH (see fig. 60)	All	NP
	15-7632-1	Installation—Stabilizer gap cover RH (see fig. 60)	All	NP
4	15-7023-103	Fin Assembly (see fig. 59)	All	1
5	AN386-4-9A	Pin—Threaded taper	All	4
6	AN386-5-17A	Pin—Threaded taper	All	4
	AN364-524	Nut—Thin self-locking	All	4
	AN364-624	Nut—Thin self-locking	All	4
	AN975-5	Washer—Taper pin	All	4
	AN975-6	Washer—Taper pin	All	4
7	15-7630	Installation—Fin and fuselage fairing station 8-10 (see fig. 60)	All	NP
8	15-7631	Installation—Fin station fairing 10-11 (see fig. 60)	All	NP
9	15-7026-39	Elevator Assembly—LH (see fig. 59)	CA	1
	15-7026-40	Elevator Assembly—RH (see fig. 59)	CA	1
	15-7026-43	Elevator Assembly—LH (see fig. 59)	HH	1
	15-7026-44	Elevator Assembly—RH (see fig. 59)	HH	1
10	AN4-13	Bolt—Aircraft	All	4
11	AN4-16	Bolt—Aircraft	All	2
	AN310-4	Nut—Aircraft castle	All	6
	AN960-416	Washer—Plain	All	6
12	AN960-416	Washer—Plain	All	2
	15-10983	Installation—Elevator balance spring	All	NP
13	1-28304	Link—Elevator down spring	All	1
14	3-20118	Spring—Elevator down	All	1
	15-7617	Installation—Elevator torque tube	All	NP
	15-7617-3	Tube Assembly	All	1
15	15-7617-2	Tube—Elevator torque	All	1
16	9-3664	Mast—Elevator control	All	4
17	9-3613	Quadrant—Lock and stop	All	1
	1-18651	Socket—Elevator and rudder lock	All	1
18	6-9321	Hinge Assembly—Elevator	All	2
	AN200K5	Bearing—Heavy duty metal shield	All	1
19	6-13822	Arm Assembly—Torque tube	All	1
20	6-9208	Collar—Torque tube	All	2
	6-9455	Installation—Elevator torque tube boot (LH)	All	NP
	6-9455-1	Installation—Elevator torque tube boot (RH)	All	NP
21	6-9455-4	Boot Assembly—Elevator torque tube (LH)	All	1
	6-9455-5	Boot Assembly—Elevator torque tube (RH)	All	1
22	AN3-7A	Bolt—Aircraft	All	16
	AN365-1032	Nut—Self-locking	All	16
	AN960-10	Washer—Plain	All	32
23	15-7024-53	Rudder Assembly (see fig. 59)	All	1
24	15-9497	Control—Rudder trim tab (see fig. 63)	All	1
	15-7478	Installation—Rudder torque lower tube	All	NP
25	15-7478-2	Tube	All	1
26	6-9208	Collar	All	1
27	6-9221	Fitting—Mast support	All	1
28	6-9222	Fitting—Quadrant support	All	1
	9-3590	Quadrant Assembly—Rudder lock and stop	All	1
29	9-3590-1	Quadrant	All	1
30	1-18651	Socket—Elevator and rudder lock	All	1
31	NAS53A11-5	Bolt—Close tolerance	All	2
	AN365-1032	Nut—Self-locking	All	2
	AN960-10	Washer—Plain	All	2
32	NAS55A13	Bolt—Close tolerance	All	2
	AN365-524	Nut—Self-locking	All	2
	AN960-516	Washer—Plain	All	2
33	7-1515	Mast—Rudder control	All	1
34	AN5-13A	Bolt—Aircraft	All	2
	AN365-524	Nut—Self-locking	All	2
	AN960-516	Washer—Plain	All	2
35	AN8-20	Bolt—Aircraft	All	1
	AN310-8	Nut—Aircraft castle	All	1
	AN960-816	Washer—Plain	All	3
	6-9458	Installation—Rudder torque tube boot	All	NP
36	6-9458-1	Boot Assembly—Rudder torque tube	All	1
37	AN3-7A	Bolt—Aircraft	All	8
	AN365-1032	Nut—Self-locking	All	8
	AN960-10	Washer—Plain	All	16
38	AN4-11	Bolt—Aircraft	All	1
39	AN4-16	Bolt—Aircraft	All	1
40	AN4-17	Bolt—Aircraft	All	1
	AN310-4	Nut—Aircraft castle	All	3
	AN960-416	Washer—Plain	All	2
41	BAC272S54-13	Bushing—Running fit	All	2
		Tail de-icer (see fig. 61)		
42	FC163-8-1	Boot—Stabilizer de-icing (B. F. Goodrich)	All	2
43	FC163-9-1	Boot—Fin de-icing (B. F. Goodrich)	All	1
	3-12999	Installation—Body position light lamp	All	NP
44	37B4962-7	Lamp Assembly GFE	All	1
	3-12999-1	Installation—Body position light lamp	All	NP
45	37B4962-5	Lamp Assembly GFE	All	1

PUBLISHED BY AVIALOGS.COM

TAIL

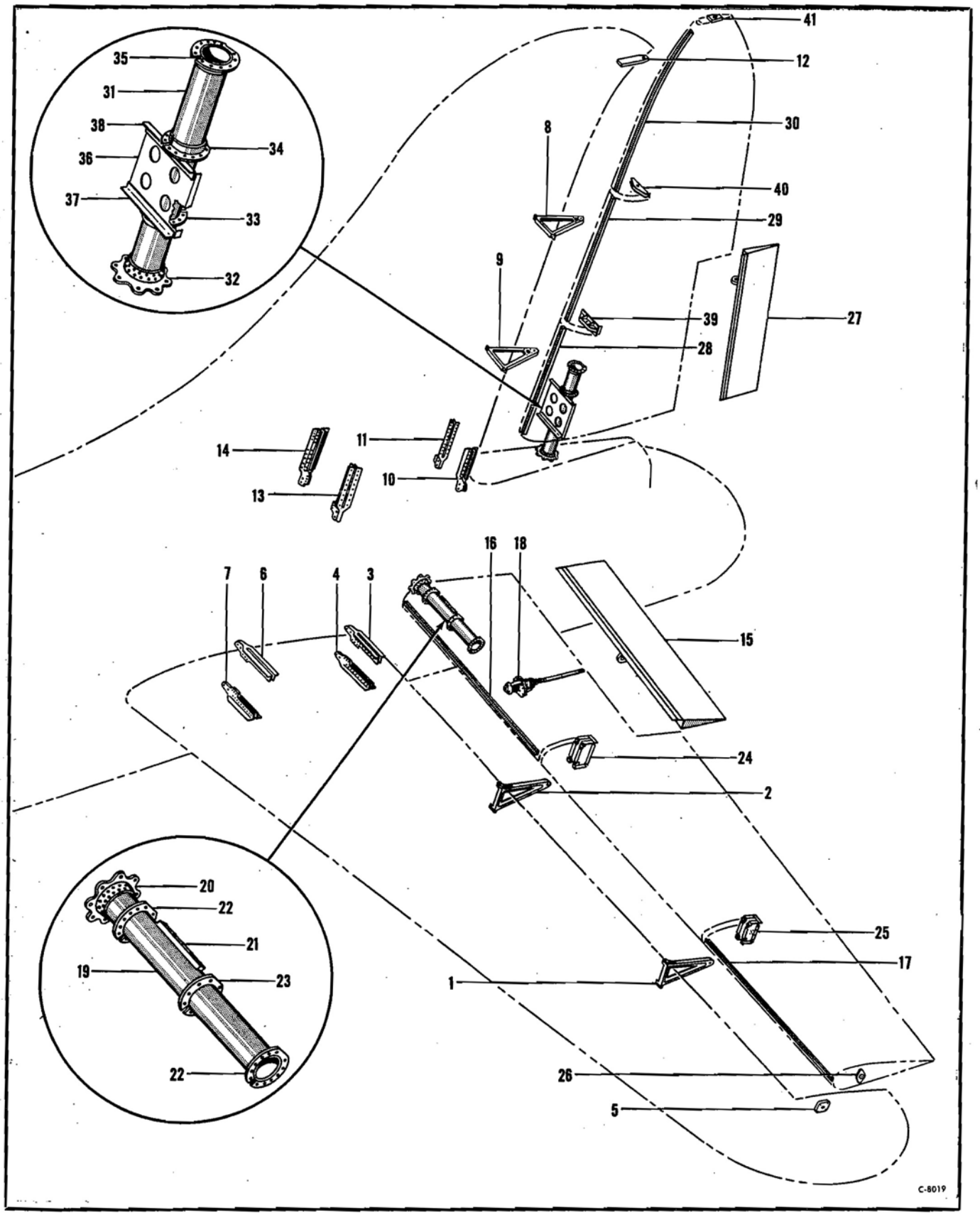

Figure 59—Tail Surfaces Details

PUBLISHED BY AVIALOGS.COM

TAIL

Tail Surfaces Details

Figure & Index No.	Part Number	1 2 3 4 5 6 7 Nomenclature	Usage Code	Units Per Assy.
		Tail Surfaces Details		
	15-7324-2	Installation—Control surface	All	NP
	15-7025	Stabilizer Assembly—LH (see fig. 58)	UA	Ref
	15-7025-1	Stabilizer Assembly—RH (see fig. 58)	UA	Ref
	15-7025-134	Stabilizer Assembly—LH (see fig. 58)	EK	Ref
	15-7025-140	Stabilizer Assembly—RH (see fig. 58)	EK	Ref
	15-7025-4	Tail Assembly	UA	1
	15-7025-142	Tail Assembly	EK	1
59-1	15-7385	Hinge Assembly—Elevator station 168	UA	1
	15-7385-5	Hinge Assembly—Elevator station 168	EK	1
2	15-7385-2	Hinge Assembly—Elevator station 94	All	1
	15-7367	Spar Assembly—Stabilizer rear	UA	1
	15-7367-49	Spar Assembly—Stabilizer rear	EK	1
3	8-1264	Terminal—Stabilizer rear spar	All	1
4	8-1264-1	Terminal—Stabilizer rear spar	All	1
	15-7025-2	Tip Assembly	All	1
	8-1298-1	Installation—Stabilizer rib station 229.3	All	NP
	8-1298-3	Tail Assembly—Rib	All	1
5	1-18209	Fitting—Stabilizer outboard	All	1
	15-7025-6	Leading Edge Assembly	UA	1
	15-7025-141	Leading Edge Assembly	EK	1
	15-7376	Spar Assembly—Stabilizer front	All	1
6	8-1268-3	Terminal—Stabilizer front spar	All	1
7	8-1268-4	Terminal—Stabilizer front spar	All	1
	15-7023-103	Fin Assembly (see fig. 58)	All	Ref
	15-7023-104	Frame Assembly—Rear	All	1
8	15-7388-2	Hinge Assembly—Rudder station 8	All	1
9	9-5206	Hinge Assembly—Rudder station 5	All	1
	8-1270	Spar Assembly—Fin rear	All	1
	14-2052	Installation—Fin rear spar terminal	All	NP
10	8-1267	Terminal—LH	All	1
11	8-1267-1	Terminal—RH	All	1
	15-7023-31	Tip Assembly	All	1
	8-1522	Installation—Fin rib station 11A	All	NP
	8-1522-1	Rib Assembly	All	1
12	3-13705	Hinge Assembly—Fin station 11A	All	1
	8-1269	Spar Assembly—Fin front	All	1
	14-2051	Installation—Fin front spar terminal	All	NP
13	8-1266	Terminal—LH	All	1
14	8-1266-1	Terminal—RH	All	1
	15-7026-39	Elevator Assembly—LH (see fig. 58)	CA	Ref
	15-7026-40	Elevator Assembly—RH (see fig. 58)	CA	Ref
	15-7026-43	Elevator Assembly—LH (see fig. 58)	HH	Ref
	15-7026-44	Elevator Assembly—RH (see fig. 58)	HH	Ref
15	14-2073	Tab Assembly—Elevator trim LH	CA	1
	14-2073-1	Tab Assembly—Elevator trim RH	CA	1
	14-3638	Tab assembly—Elevator trim LH	HH	1
	14-3638-1	Tab Assembly—Elevator trim RH	HH	1
	3-13513	Mast Assembly—Elevator tab control LH	All	1
	3-13513-1	Mast Assembly—Elevator tab control RH	All	1
16	6-9449	Weight—Elevator balance (LH)	LB	1
	6-9449-1	Weight—Elevator balance (RH)	LB	1
17	6-9449-3	Weight—Elevator balance	H	1
	6-16234	Weight—Elevator balance (LH)	EM	1
	6-16234-1	Weight—Elevator balance (RH)	EM	1
	6-16234-3	Weight—Elevator balance	FF	1
18	55-7580	Installation—Elevator trim tab control (LH) (see fig. 62)	All	NP
	55-7580-1	Installation—Elevator trim tab control (RH) (see fig. 62)	All	NP
	8-1521	Installation—Elevator torque tube (LH)	All	NP
	8-1521-1	Installation—Elevator torque tube (RH)	All	NP
	8-1521-2	Tube Assembly—Elevator torque	All	1
19	8-1521-3	Tube—Elevator torque	All	1
20	6-9208	Collar—Torque tube connecting	CB	1
	6-11831	Collar—Torque tube connecting	IL	1
21	8-1521-4	Shear Tie—Elevator torque tube	All	1
22	1-18191-1	Collar—Support	All	2
23	1-18192-1	Collar—Support	All	1
	15-7636	Installation—Elevator hinge station 94 (LH)	All	NP
	15-7636-1	Installation—Elevator hinge station 94 (RH)	All	NP
24	6-9375	Support Assembly—Elevator hinge bearing	All	1
	15-7637	Installation—Elevator hinge station 168 (LH)	All	NP
	15-7637-1	Installation—Elevator hinge station 168 (RH)	All	NP
25	6-9376	Support Assembly—Elevator hinge bearing	All	1
	15-7615	Installation—Elevator tail rib outboard (LH)	All	NP
	15-7615-1	Installation—Elevator tail rib outboard (RH)	All	NP
26	1-18230	Fitting Assembly—Elevator hinge	All	1
	15-7024-53	Rudder Assembly (see fig. 58)	All	Ref
27	14-2043	Tab Assembly—Rudder trim	All	1
	1-18464	Mast Assembly—Rudder trim tab	All	1
28	6-9452	Weight—Balance	LA	1
29	6-9452-1	Weight—Balance	SB	1
30	6-9452-4	Weight—Balance	LA	1
	6-16240	Weight—Balance	PI	1
	6-16240-1	Weight—Balance	ZM	1
	6-16240-2	Weight—Balance	PI	1
	6-16240-3	Weight—Balance	PI	1
	6-16240-4	Weight—Balance	PI	1
	15-7042-31	Installation—Rudder torque tube upper	All	NP
	15-7042-32	Tube Assembly—Rudder torque	All	1
31	15-7042-2	Tube—Rudder torque	All	1
32	6-9208	Collar—Torque tube connecting	CB	1
	6-11831	Collar—Torque tube connecting	IL	1
33	3-18263	Collar—Support	All	1
34	3-18262	Collar—Support	All	1
35	3-18264-1	Collar—Support	All	1
36	15-7042-3	Plate—Shear	All	1
37	15-7042-4	Angle	All	1
38	15-7042-5	Angle	All	1
	15-7479-34	Spar Assembly—Rudder rear	All	1
39	3-18261	Hinge—Rudder station 5	All	1
40	1-18607-1	Hinge—Rudder station 8	All	1
41	1-18824	Block—Rudder hinge	All	1

PUBLISHED BY AVIALOGS.COM

TAIL

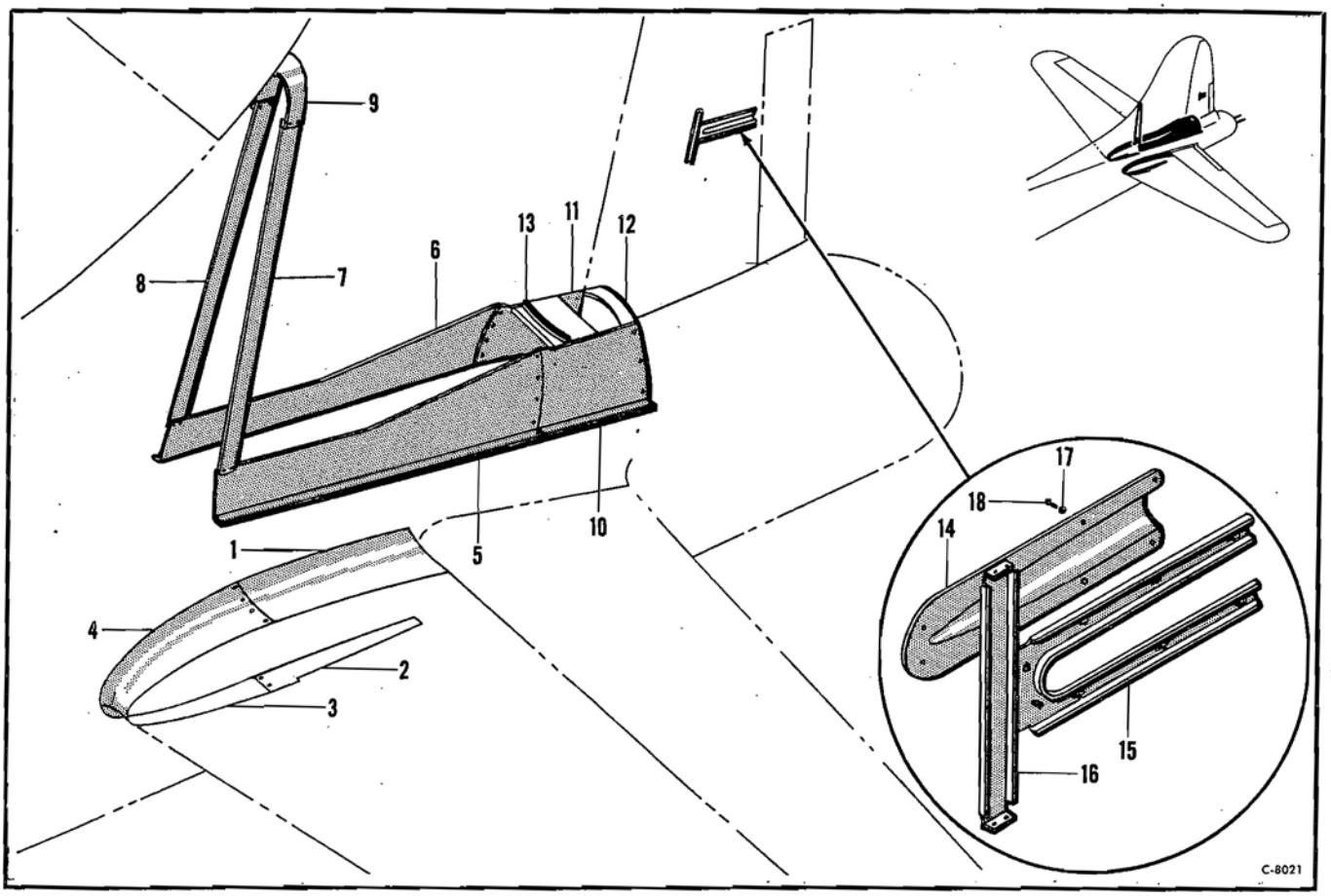

Figure 60—Tail Surfaces Fairings and Gap Covers

Tail Surfaces Fairings and Gap Covers

Figure & Index No.	Part Number	1 2 3 4 5 6 7 Nomenclature	Usage Code	Units Per Assy.
		Tail Surfaces Fairings and Gap Covers		
	15-7632	Installation—Stabilizer gap cover LH (see fig. 58)	All	NP
	15-7632-1	Installation—Stabilizer gap cover RH (see fig. 58)	All	NP
60-1	15-7632-6	Cover Assembly—LH	UA	1
	15-7632-28	Cover Assembly—LH	UA	1
	15-7632-7	Cover Assembly—RH	EK	1
	15-7632-29	Cover Assembly—RH	EK	1
2	15-7632-18	Cover—Gap LH	UA	1
	15-7632-24	Cover—Gap LH	UA	1
	15-7632-19	Cover—Gap RH	EK	1
	15-7632-25	Cover—Gap RH	EK	1
3	15-7632-14	Cover—Gap LH	UA	1
	15-7632-26	Cover—Gap LH	UA	1
	15-7632-15	Cover—Gap RH	EK	1
	15-7632-27	Cover—Gap RH	EK	1
4	15-7632-16	Cover—Gap LH	UA	1
	15-7632-32	Cover—Gap LH	UA	1
	15-7632-17	Cover—Gap RH	EK	1
	15-7632-33	Cover—Gap RH	EK	1
	15-7630	Installation—Fin & fus. station 8-10 fairing (see fig. 58)	All	NP
5	15-7630-9	Fairing—LH	All	1
6	15-7630-10	Fairing—RH	All	1
7	15-7630-3	Fairing—LH	All	1
8	15-7630-4	Fairing—RH	All	1
9	15-7630-5	Fairing Assembly	All	1
	15-7631	Installation—Fin station 10-11 fairing (see fig. 58)	All	NP
10	15-7631-1	Fairing Assembly—LH	All	1
11	15-7631-2	Fairing Assembly—RH	All	1
12	3-13718	Fairing Assembly	All	1
13	3-13720	Fairing Assembly	All	1
	15-7024-53	Rudder Assembly (see fig. 58)	All	Ref
	8-1538	Installation—Tab control fairing	All	NP
14	8-1538-1	Fairing	All	1
	8-1538-3	Support Assembly	All	1
15	8-1538-2	Support	All	1
16	3-16901	Channel	All	1
17	41-1831-3	Washer	All	8
18	AN526-1032R7	Screw—Truss head	All	8

PUBLISHED BY AVIALOGS.COM

TAIL

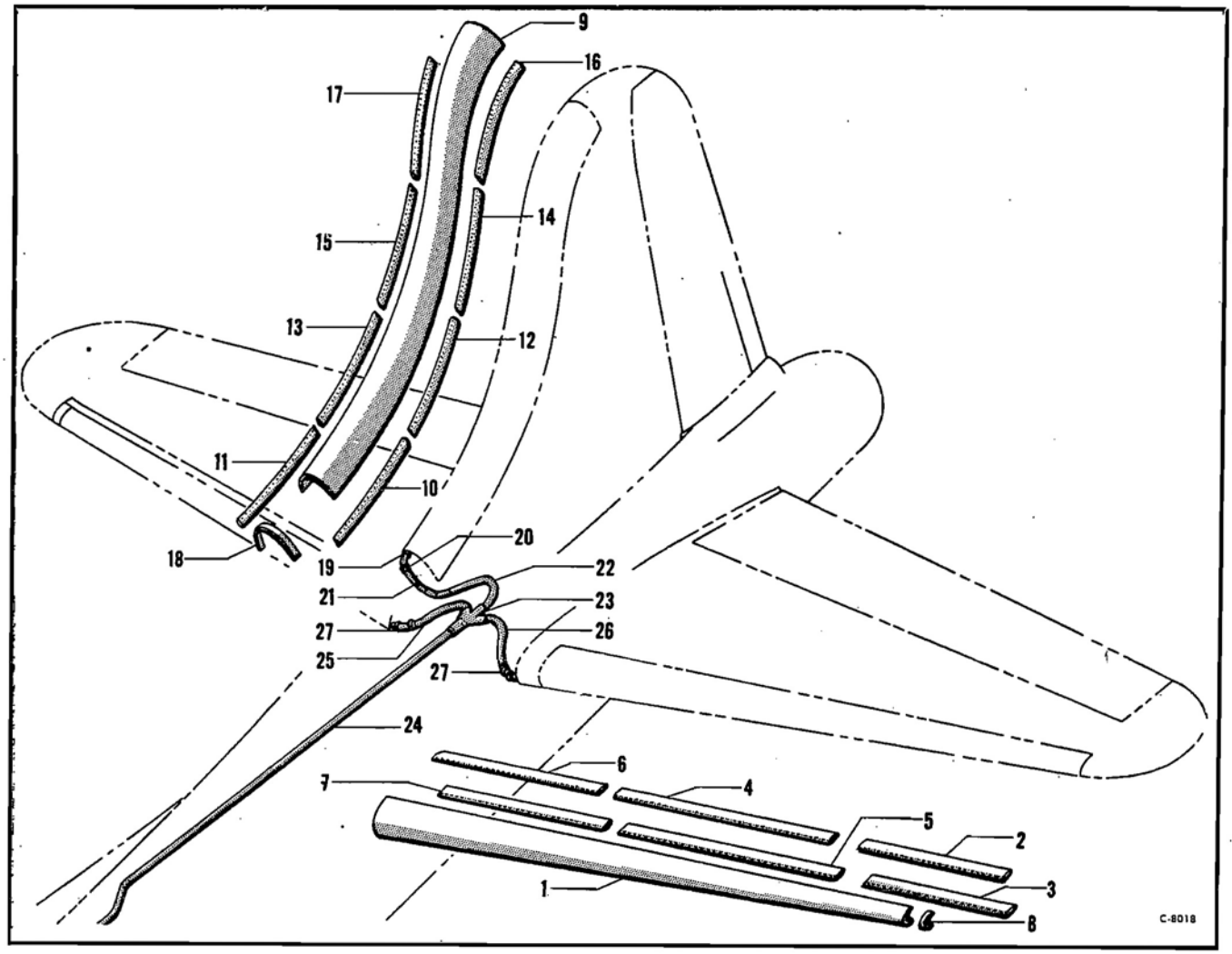

Figure 61—De-icer System

De-icer System

Figure & Index No.	Part Number	1 2 3 4 5 6 7 Nomenclature	Usage Code	Units Per Assy.
		De-icer System		
	15-7600	Installation—Wing and tail de-icer	All	NP
61-1	FC163-8-1	Boot—Stabilizer de-icer (B. F. Goodrich)	All	2
2	15-7600-13	Fairing—Stabilizer tip	All	2
3	15-7600-14	Fairing—Stabilizer tip	All	2
4	15-7600-15	Fairing—Stabilizer center	All	2
5	15-7600-16	Fairing—Stabilizer center	All	2
6	15-7600-17	Fairing—Stabilizer inboard	All	2
7	15-7600-18	Fairing—Stabilizer inboard	All	2
8	15-7600-213	Strap—Stabilizer de-icer boot	All	2
9	FC163-9-1	Boot—Fin de-icer (B. F. Goodrich)	All	1
10	15-7600-19	Fairing—Fin lower	All	1
11	15-7600-20	Fairing—Fin lower	All	1
12	15-7600-21	Fairing—Fin center	All	1
13	15-7600-22	Fairing—Fin center	All	1
14	15-7600-23	Fairing—Fin center	All	1
15	15-7600-24	Fairing—Fin center	All	1
16	15-7600-25	Fairing—Fin upper	All	1
17	15-7600-26	Fairing—Fin upper	All	1
18	15-7600-28	Strap—Fin de-icer boot	All	1
	15-7600-45	Manifold Assembly—Fin	All	1
19	41-688-3	Manifold—De-icer	All	1
20	15-7600-47	Hose—De-icer	All	1
21	15-7600-44	Tube—De-icer	All	1
22	15-7600-96	Tube—De-icer	All	1
23	3-11257	Manifold—De-icer	All	1
24	15-7600-95	Tube—De-icer	QB	1
	15-7600-263	Tube—De-icer	XM	1
25	15-7600-97	Tube—De-icer	All	1
26	15-7600-98	Tube—De-icer	All	1
27	41-688-3	Manifold—De-icer	All	2

PUBLISHED BY AVIALOGS.COM

TAIL

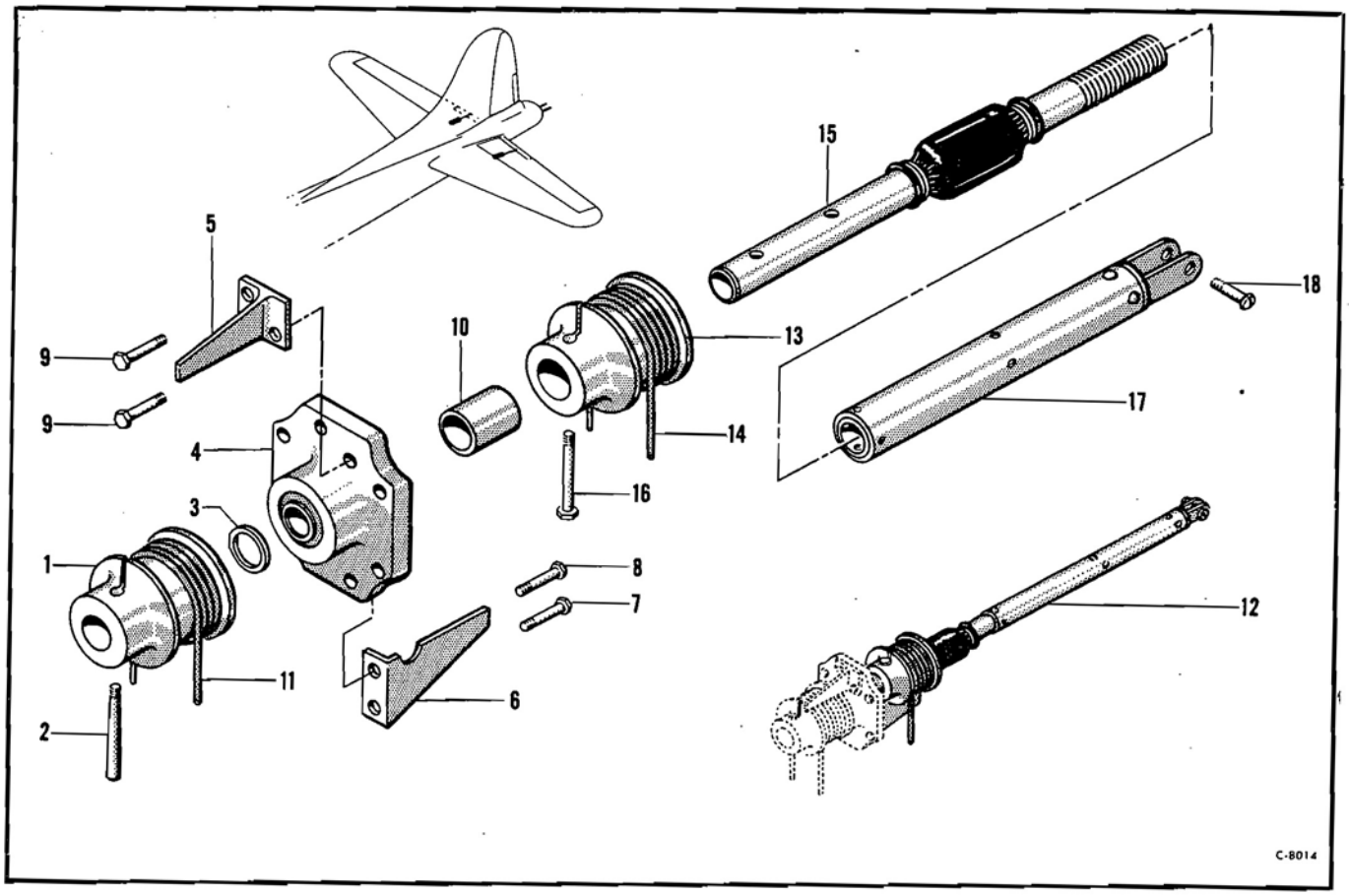

Figure 62—Elevator Trim Tab Control

Elevator Trim Tab Control

Figure & Index No.	*Part Number*	*1 2 3 4 5 6 7 Nomenclature*	*Usage Code*	*Units Per Assy.*
	55-7580	Installation—Elevator trim tab control (LH) (see fig. 59)	All	NP
	55-7580-1	Installation—Elevator trim tab control (RH) (see fig. 59)	All	NP
62-1	1-18494	Drum—Tab control	All	1
2	AN386-1-13A	Pin—Taper threaded	All	1
3	51-446-0-8	Spacer	All	1
4	6-9408-2	Housing Assembly—Tab control	All	1
	AN201K12A	Bearing—Metal shielded ball	All	2
5	1-18528	Guard—Elevator tab control cable	All	1
6	1-18289	Guard—Elevator tab control cable	All	1
7	AN3-4A	Bolt—Aircraft	All	1
8	AN3-6A	Bolt—Aircraft	All	5
9	AN3-7A	Bolt—Aircraft	All	2
10	51-446-0-60	Spacer	All	1
11	AN669L3LH	Terminal—Cable turnbuckle (LH)	All	1
	AN669L3RH	Terminal—Cable turnbuckle (RH)	All	1
12	6-9442-1	Control Assembly—Elevator trim tab (LH)	CA	1
	6-9442-3	Control Assembly—Elevator trim tab (LH)	HH	1
	6-9442-2	Control Assembly—Elevator trim tab (RH)	CA	1
	6-9442-4	Control Assembly—Elevator trim tab (RH)	HH	1
13	1-18494	Drum—Tab control	All	1
14	AN669L3RH	Terminal—Cable turnbuckle	All	1
	AN669L3RH	Terminal—Cable turnbuckle	All	1
15	3-13516	Screw Assembly—Elevator trim tab (LH)	CA	1
	3-13516-1	Screw Assembly—Elevator trim tab (RH)	HH	1
	1-18517	Screw—Trim tab (LH)	CA	1
	1-18517-1	Screw—Trim tab (RH)	HH	1
	21-9751-16	Installation—Universal grease boot	All	NP
	44B6540	Joint—Universal	All	1
16	AN3-17A	Bolt—Aircraft	All	1
17	3-13572	Nut Assembly—Elevator trim tab (LH)	All	1
	3-13572-3	Nut Assembly—Elevator trim tab (RH)	All	1
	1-18446	Terminal	All	1
18	NAS54-115	Bolt—Close tolerance	All	1

PUBLISHED BY AVIALOGS.COM

TAIL

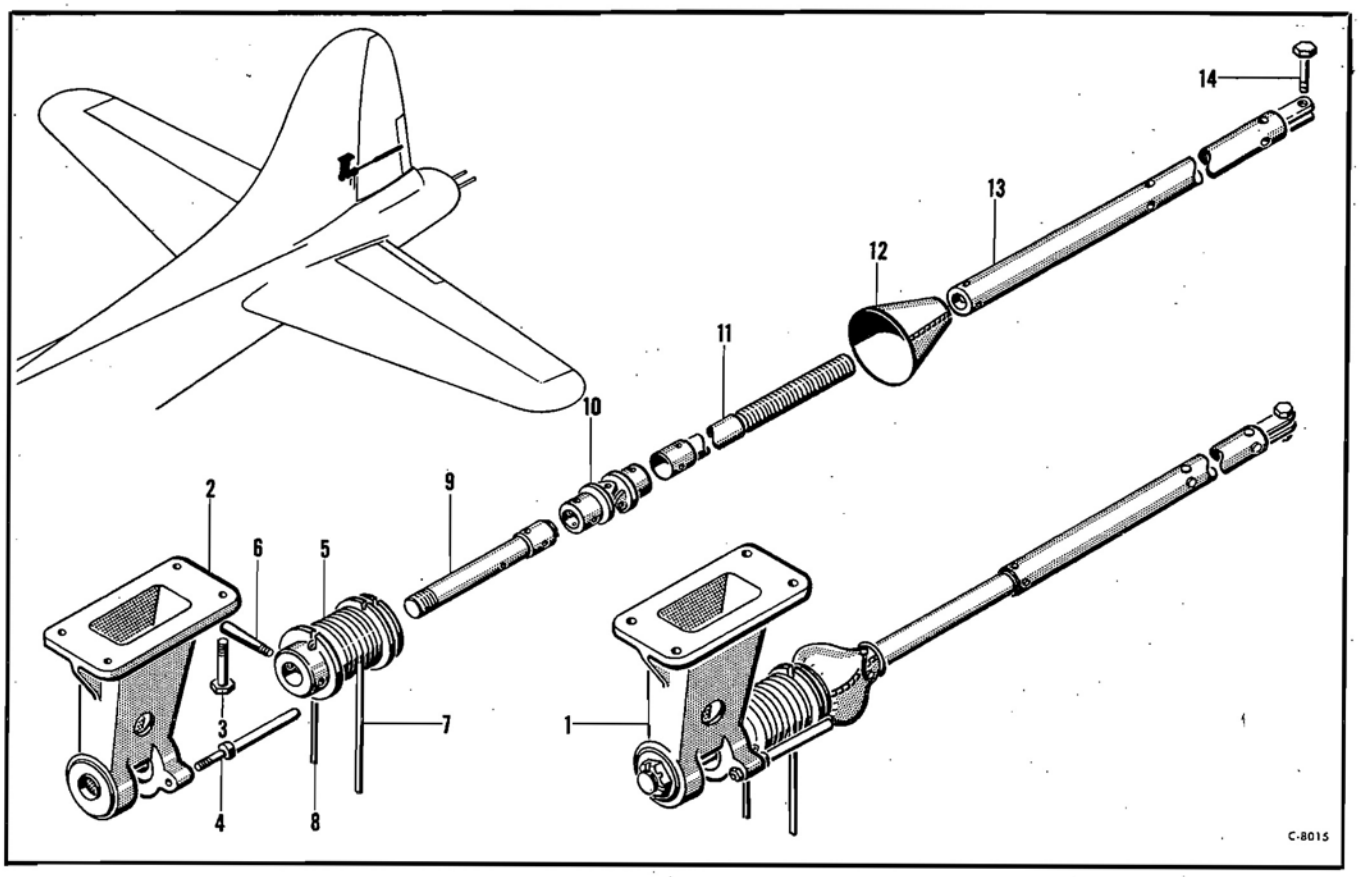

Figure 63—Rudder Trim Tab Control

Rudder Trim Tab Control

Figure & Index No.	*Part Number*	*1 2 3 4 5 6 7 Nomenclature*	*Usage Code*	*Units Per Assy.*
63-1	15-9497	Control—Rudder trim tab (see fig. 58)	All	Ref
2	6-11992	Support Assembly—Rudder trim tab	All	1
	9-5067	Support—Rudder trim tab	All	1
	AN201K12A	Bearing—Metal shielded ball	All	2
3	AN4-20A	Bolt—Aircraft	All	4
4	1-25597	Guard—Cable	All	2
	15-9497-1	Drum Assembly	All	1
5	3-16978	Drum—Tab control	All	1
6	AN386-1-12A	Pin—Threaded taper	All	1
7	BAC1824-320-2751	Cable Assembly	All	1
8	15-9497-2	Cable Assembly	All	1
	BAC1831-13	Terminal	All	1
	AN669L3RH	Terminal—Cable turnbuckle	All	1
	6-12615	Screw Assembly—Tab control	All	1
9	3-16976	Shaft—Rudder tab control	All	1
	BAC1851-16	Joint—Universal	GB	1
10	44B6540	Joint—Universal (optional)	PL	1
11	3-16947	Screw—Trim tab	All	1
	3-18279	Installation—Rudder tab boot	GB	NP
12	3-18279-1	Boot	GB	1
13	3-13730	Nut Assembly—Rudder trim tab	All	1
	1-18446	Terminal—Trim tab rod	All	1
14	NAS54-11	Bolt—Close tolerance	All	1

PUBLISHED BY AVIALOGS.COM

FUSELAGE

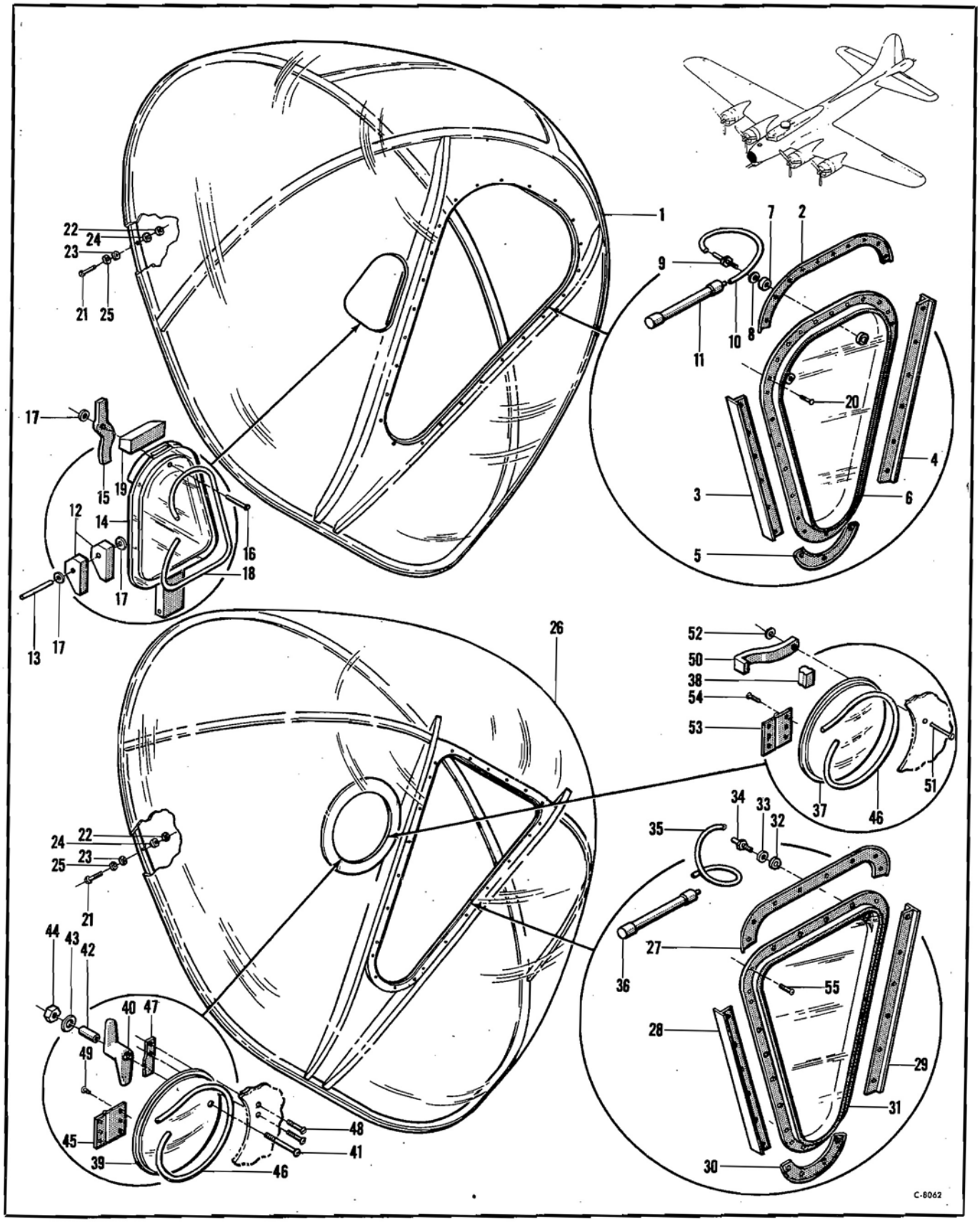

Figure 64—Nose Assembly

PUBLISHED BY AVIALOGS.COM

FUSELAGE

Nose Assembly

Figure & Index No.	Part Number	1 2 3 4 5 6 7 Nomenclature	Usage Code	Units Per Assy.
		Nose Assembly		
	55-7377	Fuselage Assembly (see fig. 71)	All	Ref
	15-7991-28	Installation—Nose fuselage	All	NP
	15-7991-26	Nose Assembly—Fuselage	J	1
64-1	15-7991-27	Nose	J	1
2	15-7991-12	Retainer (top)	J	1
3	15-7991-18	Retainer (side)	J	1
4	15-7991-14	Retainer (side)	J	1
5	15-7991-13	Retainer (bottom)	J	1
6	15-8760	Window Assembly—Bombardier	J	1
7	41-4888-14-7	Washer—1-16 rubber	J	1
8	AN960-10L	Washer—Plain	J	1
9	1-20354	Vent—Dehydrator	J	1
10	15-9771-10	Tube—Rubber	J	1
11	3-13930	Tube Assembly—Dehydrator	J	1
12	15-7991-3	Hinge	J	2
13	15-7991-21	Pin	J	1
14	15-7991-22	Door	J	1
15	15-7991-36	Latch	J	1
16	15-7991-20	Pin—Countersunk head	J	1
17	AN960B8	Washer—Plain	J	3
18	15-7991-24	Tubing—Rubber	J	1
19	15-7991-5	Catch	J	1
20	BAC1457-10-205	Screw—Oval head machine	J	25
	AN365-1032	Nut—Self-locking	J	25
21	AN3-13A	Bolt—Aircraft	All	29
	AN3-12A	Bolt—Aircraft	All	3
	AN364-1032	Nut—Thin self-locking	All	29
22	AN960D10	Washer—Plain	All	32
23	BAC1908-55K	Washer—Plain	All	32
24	BAC1908-64K	Washer—Plain	All	32
25	BAC1908-43AL	Washer—Plain	All	32
	15-11406	Nose Assembly—Fuselage	MF	1
	15-11406-28	Nose Assembly—Fuselage	KO	1
26	15-11406-29	Nose	KO	1
	15-11406-1	Nose	MF	1
27	15-11406-8	Retainer (top)	OF	1
28	15-11406-10	Retainer (side)	OF	1
29	15-11406-11	Retainer (side)	OF	1
30	15-11406-9	Retainer (bottom)	OF	1
31	14-3610	Window Assembly—Bombardier	OF	1
32	41-4888-14-7	Washer—1-16 rubber	OF	1
33	AN960-10L	Washer—Plain	OF	1
34	1-20354	Vent—Dehydrator	OF	1
35	15-11406-6	Tube—Rubber	OF	1
36	3-13930	Tube Assembly—Dehydrator	OF	1
	15-11406-31	Door Assembly	JO	1
37	15-11406-18	Door	JO	1
38	15-11406-15	Handle	JO	1
	15-11406-33	Door Assembly	RQ	1
39	15-11406-18	Door	RQ	1
40	3-29904	Handle—Access door	RQ	1
41	AN526-1032R28	Screw—Truss head	RQ	1
42	NAS75-3-028	Bushing—Plain steel	RQ	1
43	AN960D10	Washer—Plain	RQ	1
44	AN365-1032	Nut—Self-locking	RQ	1
45	15-11406-27	Hinge	KO	1
46	15-11406-12	Tubing—Rubber	OF	1
47	3-29905	Spring—Access door	RQ	1
48	AN526-832R18	Screw—Truss head	RQ	2
	AN365-832	Nut—Self-locking	RQ	2
49	AN530-6R6	Screw—Round head	KO	6
50	15-11406-19	Latch	KO	1
51	15-11406-30	Pin—Countersunk head	KO	1
	15-11406-14	Pin—Countersunk head	MF	1
52	AN960B8	Washer—Plain	All	2
53	AN250-11U	Hinge—Butt	MF	1
54	AN530-4R6	Screw—Round head	MF	6
55	BAC1457-10-205	Screw—Oval head machine	OF	24
	AN365-1032	Nut—Self-locking	OF	24

PUBLISHED BY AVIALOGS.COM

FUSELAGE

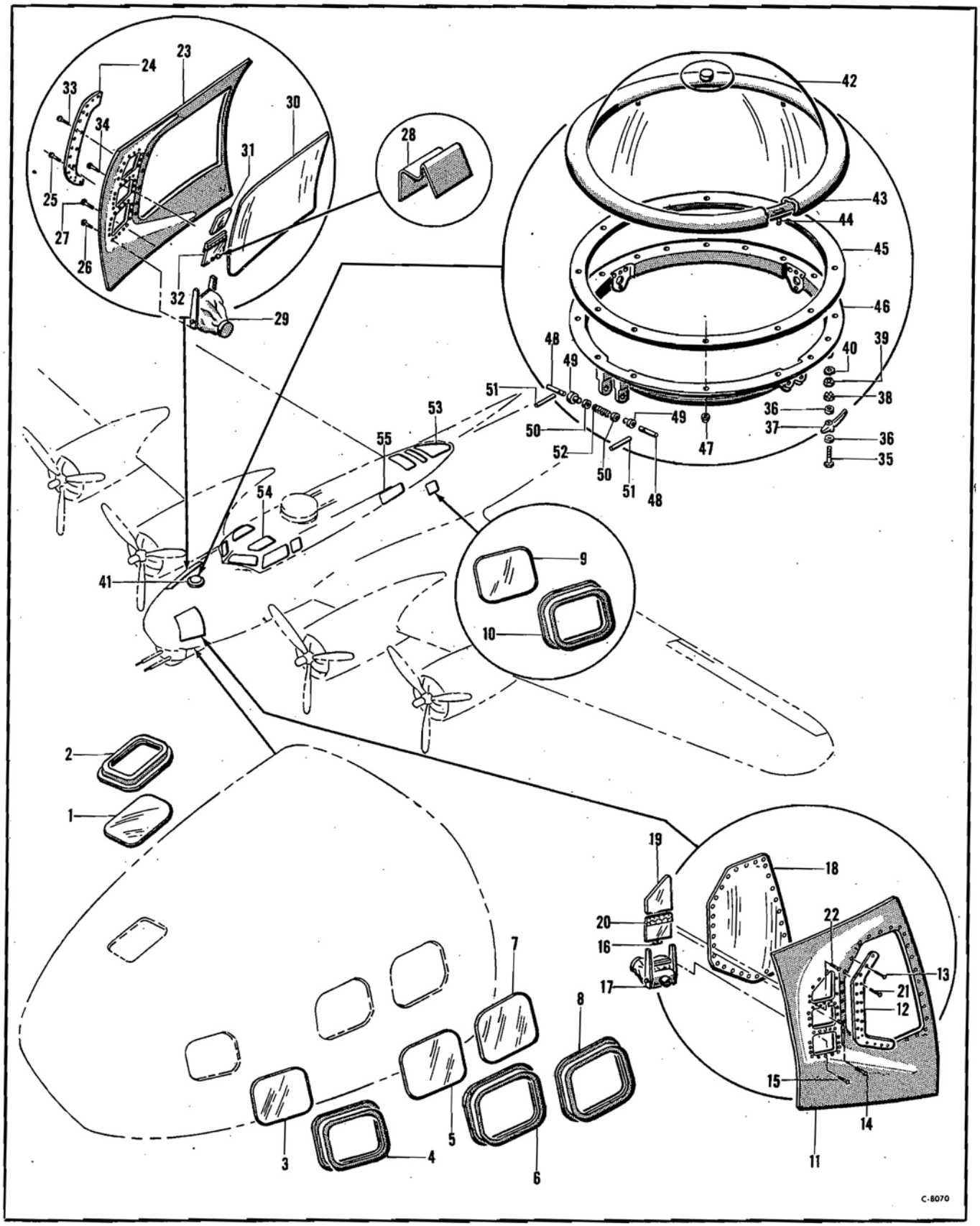

Figure 65—Forward Section Windows

PUBLISHED BY AVIALOGS.COM

FUSELAGE

Forward Section Windows

Figure & Index No.	Part Number	1 2 3 4 5 6 7 Nomenclature	Usage Code	Units Per Assy.
		Forward Section Windows		
	55-7330	Fuselage Assembly—Forward section (see fig. 71)	All	Ref
	75-5667	Installation—Window station 1-3	All	NP
65-1	75-5667-600	Window	All	1
2	75-5667-617	Frame Assembly	All	1
3	65-5667-13	Window	AB	2
4	65-5667-503	Frame Assembly—LH	AB	1
	65-5667-504	Frame Assembly—RH	All	1
5	65-5667-26	Window	All	2
6	65-5667-505	Frame Assembly—LH	All	1
	65-5667-506	Frame Assembly—RH	AB	1
7	65-5667-17	Window—LH	All	1
	65-5667-22	Window—RH	All	1
8	65-5667-507	Frame Assembly—LH	All	1
	65-5667-508	Frame Assembly—RH	All	1
	3-12211	Installation—Window station 5C (LH)	All	NP
	3-12211-1	Installation—Window station 5C (RH)	All	NP
9	3-12211-5	Window	All	1
10	3-12211-7	Frame Assembly—LH side	All	1
	3-12211-8	Frame Assembly—RH side	All	1
	15-13839	Installation—Cheek gun doubler LH	AL	NP
	15-13839-4	Doubler Assembly	AL	1
11	15-13839-5	Doubler	AL	1
12	15-13839-6	Fairing	AL	1
13	AN504-8R8	Screw—Round head self-tapping	All	15
	AN936A8	Washer—Lock	AL	15
14	AN4H5A	Bolt—Aircraft	AL	16
	AN960D416	Washer—Plain	AL	16
15	AN530-8R10	Screw—Sheet metal round head	AL	10
16	3-26006	Lock—Sight window	AL	1
17	9-7545	Mount Assembly—Cheek gun (see fig. 146)	AL	1
18	15-13839-7	Window	AL	1
19	6-16964	Window—Scanning	AL	1
20	6-16963	Window Assembly—Cheek sight	AL	1
21	AN530-10R12	Screw—Sheet metal round head	AL	22
22	AN530-8R12	Screw—Sheet metal round head	AL	10
	15-13843	Installation—Cheek gun doubler RH	AL	NP
	15-13843-9	Doubler Assembly	AL	1
23	15-13843-10	Doubler	AL	1
24	15-13843-11	Strip—Fairing	AL	1
25	AN504-8R8	Screw—Round head self-tapping	AL	16
	AN936A8	Washer—Lock	AL	16
26	AN530-8R10	Screw—Sheet metal round head	AL	10
27	AN4H5A	Bolt—Aircraft	AL	16
	AN960D416	Washer—Plain	AL	16
28	3-26006	Lock—Sight window	AL	1
29	9-7545-1	Mount Assembly—Cheek gun (see fig. 146)	AL	1
30	15-13843-12	Window	AL	1
31	6-16981	Window—Scanning	AL	1
32	6-16963	Window Assembly—Cheek sight	AL	1
33	AN530-10R10	Screw—Sheet metal round head	AL	27
34	AN530-8R12	Screw—Sheet metal round head	AL	16
	6-11474	Installation—Astrodome	All	NP
	3-16164	Installation—Astrodome lock (LH)	All	NP
	3-16164-1	Installation—Astrodome lock (RH)	All	NP
	3-16164-2	Handle Assembly—LH	All	1
	3-16164-3	Handle Assembly—RH	All	1
35	1-28781	Bolt—Special	All	1
36	AN960-616	Washer—Plain	All	2
37	3-16160	Handle—Astrodome	All	1
38	AN320-6	Nut—Aircraft shear	All	1
39	AN316-6R	Nut—Aircraft check	All	1
40	AN936B616	Washer—Lock	All	1
41	9-5082	Astrodome Assembly	All	1
42	NO NUMBER	Dome—Navigation observation (Spec 33001) GFE	All	1
43	3-16704	Seal—Astrodome	All	1
44	3-18209	Segment Assembly—Astrodome	All	6
45	6-11788	Gasket	All	1
46	15-10001	Ring—Astrodome support	All	1
47	AN364-1032	Nut—Self-locking	All	12
48	1-24262	Shaft—Astrodome hinge	All	2
49	3-18943	Bushing—Astrodome hinge	All	2
50	AN960-516	Washer—Plain	All	2
51	3-18925	Pin—Astrodome hinge	All	2
52	1-24265	Spring—Astrodome hinge	All	1
53	55-6612	Installation—Top gun emplacement fair. (see fig. 76 & 147)	All	NP
54	15-8765	Installation—Pilots cockpit enclosure (see fig. 67)	All	NP
55	15-9759	Installation—Life raft fairing (see fig. 82)	FB	NP
	15-9759-150	Installation—Life raft fairing (see fig. 82)	NL	NP

PUBLISHED BY AVIALOGS.COM

FUSELAGE

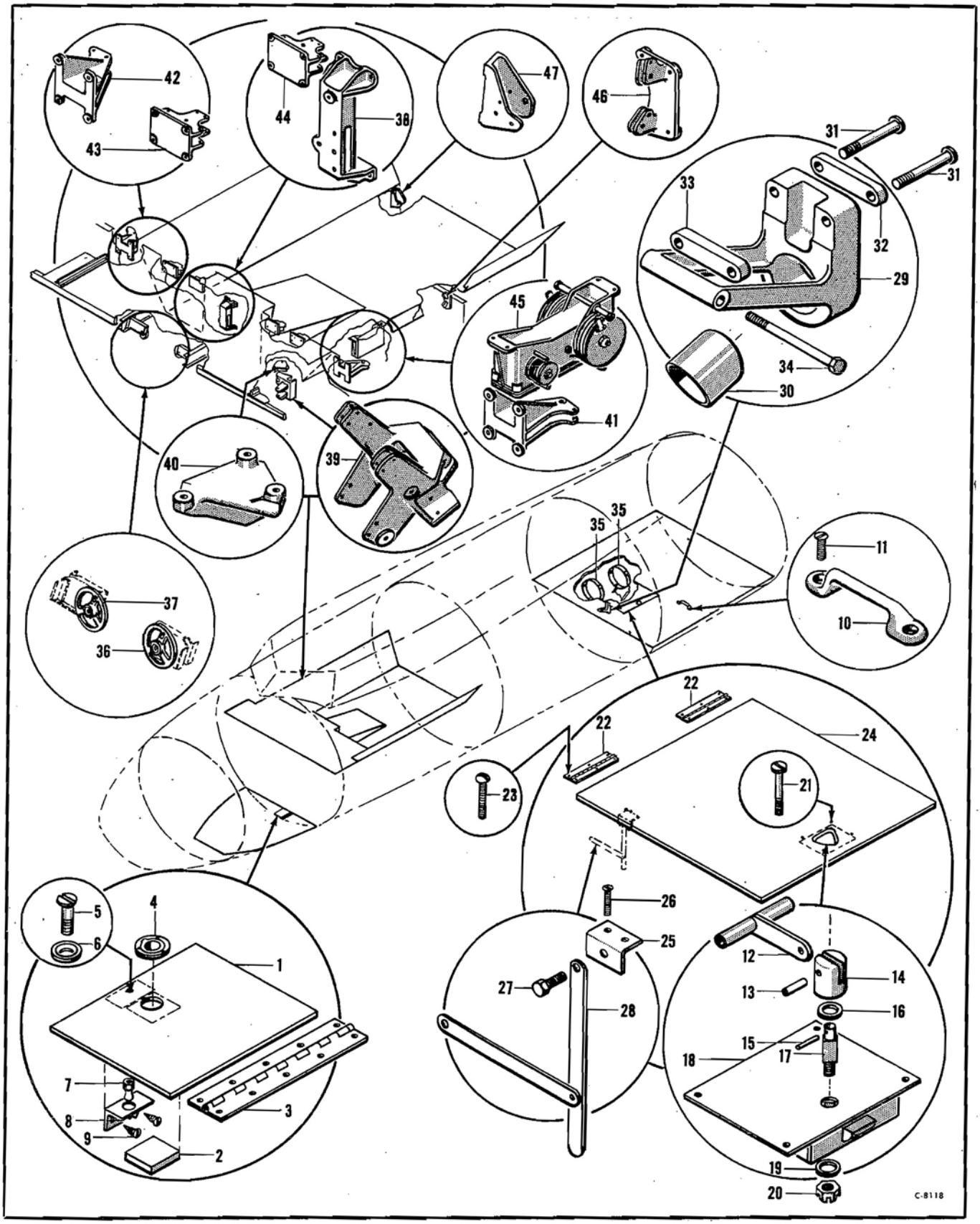

Figure 66—Forward Section Flooring Special Fittings

PUBLISHED BY AVIALOGS.COM

FUSELAGE

Forward Section Flooring Special Fittings

Figure & Index No.	Part Number	1 2 3 4 5 6 7 Nomenclature	Usage Code	Units Per Ass
		Forward Section Flooring Special Fittings		
	55-7330	Fuselage Assembly—Forward section (see fig. 71)	All	Ref
	12-839	Installation—Navigators floor	All	NP
	12-839-17	Floor Assembly	NB	1
	12-829-23	Floor Assembly	HM	1
	12-839-2	Door Assembly	All	1
66-1	12-839-3	Door	All	1
2	12-839-5	Block—Reinforcing	All	1
3	12-839-4	Hinge	All	1
4	B25	Ring—1 1-4 flush (Seattle Hardware Co.)	All	1
5	AN505-6R8	Screw—Flat head	All	1
6	BAC1907-2	Washer—Countersunk	All	1
7	P101-447	Stud—Snap (Tinnerman)	All	1
8	3-21110	Latch Assembly—Door	All	1
9	PK84XA8-10	Screw—Sheet metal round recessed head (Parker Kalon)	All	1
	75-3577	Installation—Radio and gunners floor (see fig. 73)	All	NP
	75-3577-679	Panel Assembly—LH	EA	1
	75-3577-719	Panel Assembly—LH	QH	1
10	1-20348	Loop—Footman	All	1
11	AN510-416R16	Screw—Flat head	All	2
	AN970-4	Washer—Flat	All	2
	AN365-428	Nut—Self-locking	All	2
	75-3577-638	Door Assembly—Forward	All	1
	3-13740-1	Installation—Camera hatch latch	All	NP
	3-13740-3	Latch Assembly	All	1
	1-18578	Spindle Assembly—Camera hatch latch	All	1
12	1-18849	Handle Assembly	All	1
13	1-18578-2	Pin	All	1
14	1-18388	Cap	All	1
15	1-18578-1	Pin	All	1
16	AN960D416	Washer—Plain	All	1
17	1-18448	Spindle	All	1
18	1-18462	Plate Assembly—Camera hatch latch	All	1
	1125	Latch (Dayton Mfg. Co.)	All	1
19	AN960D416	Washer—Plain	All	1
20	AN310-4	Nut—Aircraft castle	All	1
21	AN531-8R24	Screw—Sheet metal flat head	All	4
22	75-3577-661	Hinge	All	2
23	AN526-1032R4	Screw—Truss head	All	6
24	75-3577-669	Panel	All	1
25	75-3577-686	Angle	XC	1
26	AN531-6R10	Screw—Sheet metal flat head	XC	2
27	AN3-4	Bolt—Aircraft	XC	1
	AN960-10L	Washer—Plain	XC	2
	AN310-3	Nut—Aircraft castle	XC	1
28	441K	Brace—Door (Seattle Hardware Co.)	XC	1
	3-11852	Installation—Flap control bearing	All	NP
	3-11852-5	Bearing Assembly	All	1
29	3-11852-7	Housing	All	1
30	3-11852-3	Bearing	All	1
31	NAS221-28	Screw—Brazier head	All	2
	AN365-1032	Nut—Self-locking	All	2
32	3-11852-6	Spacer	All	1
33	3-11852-4	Spacer	All	1
34	AN3-26A	Bolt—Aircraft	All	1
	AN365-1032	Nut—Self-locking	All	1
	AN960D10	Washer—Plain	All	1
35	6-8143	Installation—Anti-icing tank cradle (see fig. 138)	All	NP
	85-3513	Installation—Pilots floor	All	NP
	75-3513-649	Floor Assembly	All	1
	6-7791-21	Installation—Supercharger & mixture control bracket (LH)	E	NP
	3-11133-22	Pulley Assembly—Engine controls	E	1
36	3-11133-11	Pulley Assembly	E	1
	6-7791-22	Installation—Supercharger & mixture control bracket (RH)	All	NP
	3-12038-3	Pulley Assembly—Engine controls	All	1
37	3-12038-1	Pulley Assembly	All	1
	75-3513-700	Floor Assembly	All	1
	48-1073	Beam Assembly—Pilots floor	All	1
	6-4856	Bracket Assembly—Rudder tab	All	1
38	6-12636	Bracket—Rudder tab	All	1
	15-11633	Installation—Bomb control bracket	HA	NP
	15-11633-1	Bracket Assembly	HA	1
39	15-11632	Bracket—Bomb release	HA	1
	9-6274	Installation—Emergency bomb release bracket	HA	NP
	9-6274-1	Bracket Assembly	HA	1
40	9-6256-3	Bracket—Emergency bomb release	HA	1
	15-12784	Installation—Rudder control bracket	DK	NP
	15-12784-1	Bracket Assembly (LH)	DK	1
41	15-12775	Bracket—Rudder control	DK	1
	15-12784-2	Bracket Assembly (RH)	DK	1
42	15-12775-1	Bracket—Rudder control	DK	1
	15-12784-3	Bracket Assembly	DK	2
43	9-7066	Bracket—Rudder control	DK	1
	15-12784-4	Bracket Assembly	DK	2
44	9-7066	Bracket—Rudder control	DK	1
	15-10990	Installation—Bomb release unit	HA	NP
45	15-10967	Unit Assembly—Bomb control (see fig. 158)	HA	1
	9-6265	Installation—Bomb release control bracket	HA	NP
	9-6265-1	Bracket Assembly	All	1
46	9-6262	Bracket—Bomb release control	All	1
	6-14798	Installation—External bomb control bracket	HA	NP
	6-14798-1	Bracket Assembly	All	1
47	6-14783	Bracket—External bomb control	All	1

PUBLISHED BY AVIALOGS.COM

FUSELAGE

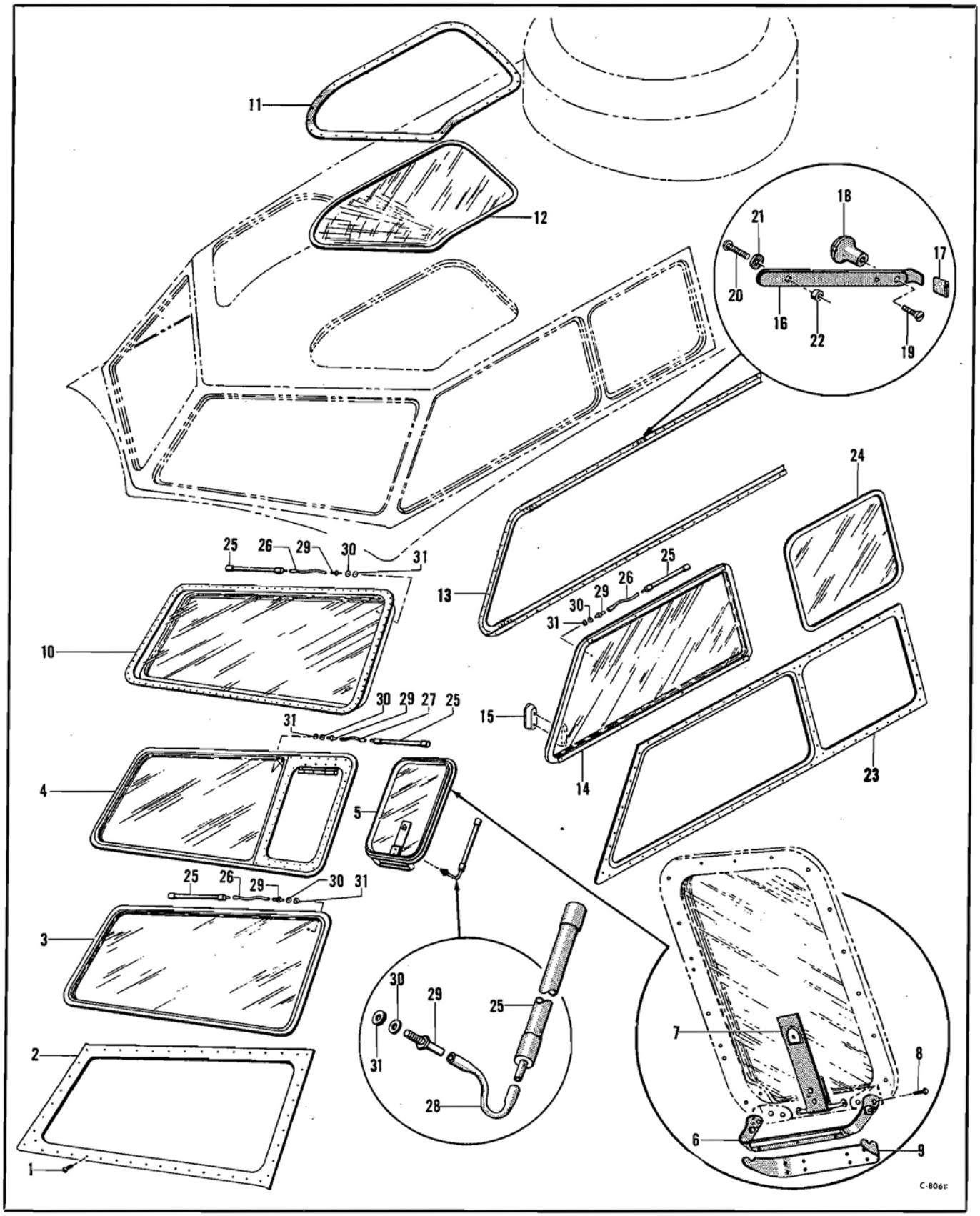

Figure 67—Pilot's Cockpit Windows and Windshield

PUBLISHED BY AVIALOGS.COM

FUSELAGE

Pilots Cockpit Windows and Windshield

Figure & Index No.	Part Number	1 2 3 4 5 6 7 Nomenclature	Usage Code	Units Per Assy.
		Pilots Cockpit Windows and Windshield		
	15-8765	Installation—Pilots cockpit enclosure (see fig. 65)	All	NP
	15-8765-1	Enclosure Assembly	FB	1
	15-8765-132	Enclosure Assembly	ML	1
	15-8765-151	Enclosure Assembly	2P	1
	15-8765-147	Enclosure Assembly	CQ	1
67-1	AN530-10R6	Screw—Sheet metal round head	All	104
2	75-3471-410	Plate—Cover (LH)	All	1
	75-3471-411	Plate—Cover (RH)	All	1
3	15-8757-2	Windshield Assembly—Cockpit enclosure (LH)	J	1
	15-8757-3	Windshield Assembly—Cockpit enclosure (RH)	J	1
	15-12921	Windshield Assembly—Cockpit enclosure (LH)	NF	1
	15-12921-1	Windshield Assembly—Cockpit enclosure (RH)	NF	1
4	15-12921-12	Window Assembly (LH)	NF	1
	15-12921-7	Hinge	NF	1
	15-12921-20	Window Assembly (RH)	NF	1
	15-12921-7	Hinge	NF	1
5	15-12921-4	Window Assembly (LH)	NF	1
	15-12921-15	Window Assembly (RH)	NF	1
6	6-14445	Handle Assembly—Window pull	All	1
7	3-22442	Strap Assembly—Window support	All	1
	6403B	Loop—Footman (Eberhard Mfg. Co.)	All	1
8	AN3-5	Bolt—Aircraft	All	2
	AN960D10	Washer—Plain	All	2
	AN310-3	Nut—Aircraft castle	All	2
9	3-23547	Support Assembly—Window pull	All	2
10	15-16196	Windshield Assembly—Cockpit enclosure (LH)	CQ	1
	15-16196-1	Windshield Assembly—Cockpit enclosure (RH)	CQ	1
11	75-3471-608	Retainer—Upper window (LH)	All	1
	75-3471-609	Retainer—Upper window (RH)	All	1
12	75-3471-761	Panel—Upper window (LH)	All	1
	75-3471-762	Panel—Upper window (RH)	All	1
	64-1697	Installation—Cockpit enclosure window (LH)	All	NP
	64-1697-1	Installation—Cockpit enclosure window (RH)	All	NP
13	64-1697-511	Retainer Assembly (LH)	All	1
	64-1697-512	Retainer Assembly (RH)	All	1
14	15-8761	Window Assembly—Sliding (LH)	All	1
	15-8761-1	Window Assembly—Sliding (RH)	All	1
15	1-22684	Fingerpull—Sliding window	All	1
	3-13932-23	Installation—Cockpit sliding window latch (LH)	All	NP
	3-13932-24	Installation—Cockpit sliding window latch (RH)	All	NP
16	3-13932-25	Latch Assembly (LH)	All	1
	3-13932-26	Latch Assembly (RH)	All	1
17	3-13932-15	Tube	All	1
18	114	Knob—Black (Paragon)	All	1
19	AN505-10-6	Screw—Flat head	All	1
	AN936A10	Washer—Lock	All	1
20	NAS221-14	Screw—Brazier head Phillips recess	All	1
21	21-5618-3	Washer—Serrated adjusting	All	1
22	BAC1603-8	Spacer	All	1
23	75-3471-605	Retainer—Side window (LH)	All	1
	75-3471-606	Retainer—Side window (RH)	All	1
24	21-6240-1	Window Assembly (side)	All	1
25	3-13930	Tube Assembly—Dehydrator	All	6
26	15-8765-16	Tube	All	2
27	15-8765-17	Tube	All	2
28	15-8765-122	Tube	OF	2
29	1-20354	Vent—Dehydrator	All	6
30	AN960-10L	Washer—Plain	All	12
31	41-4888-14-7	Washer—Rubber	All	12

PUBLISHED BY AVIALOGS.COM

FUSELAGE

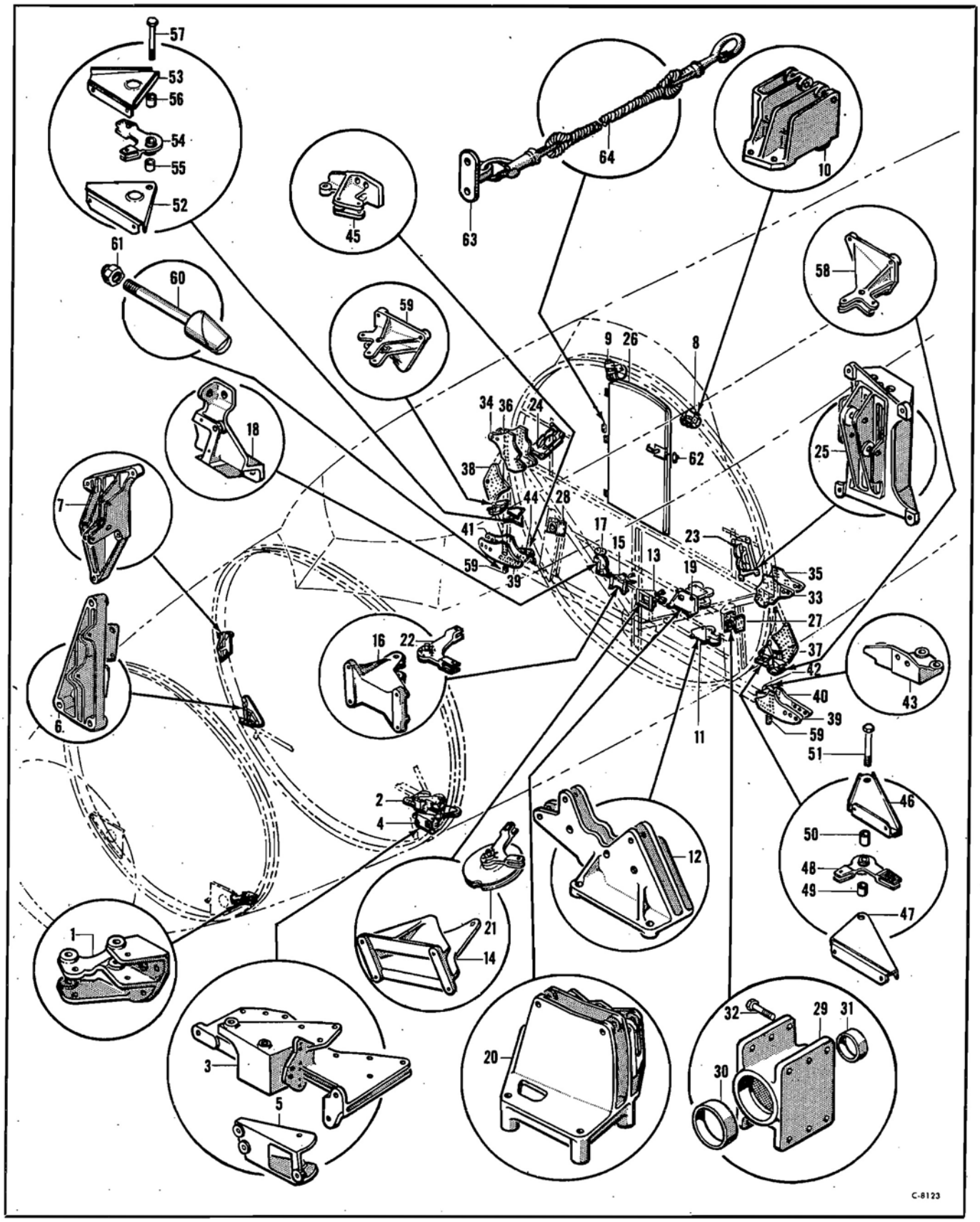

Figure 68—Navigator's and Pilot's Station Bulkhead Fittings

PUBLISHED BY AVIALOGS.COM

FUSELAGE

Navigators and Pilots Station Bulkhead Fittings

Figure & Index No.	Part Number	1 2 3 4 5 6 7 Nomenclature	Usage Code	Units Per Assy.
		Navigators and Pilots Station Bulkhead Fittings		
	55-7330	Fuselage Assembly—Forward section (see fig. 71)	All	Ref
	12-842	Bulkhead Assembly—Station 2	All	1
	9-5887	Installation—Bomb release bracket	HA	NP
68-1	9-5883	Bracket—Bomb release	HA	1
	15-7993-103	Bulkhead Assembly—Station 3	All	1
	15-11622	Installation—Bomb release bracket	HA	NP
2	15-11622-1	Bracket Assembly	HA	1
3	15-11178	Bracket—Bomb release	HA	1
4	15-11622-2	Bracket Assembly	HA	1
5	9-5897	Bracket—Bomb release	HA	1
	9-5640	Installation—Aileron servo bracket	All	NP
6	9-5640-1	Bracket Assembly—Aileron servo	All	1
	9-5642	Installation—Aileron servo bracket	All	NP
7	9-5642-1	Bracket Assembly—Aileron servo	All	1
	85-3424-767	Bulkhead Assembly—Station 4	N	1
	85-3424-776	Bulkhead Assembly—Station 4	UF	1
	85-3424-772	Bulkhead Assembly—Station 4	KJ	1
	9-6611	Installation—Elevator and rudder control bracket (LH)	KJ	NP
	9-6611-1	Installation—Elevator and rudder control bracket (RH)	KJ	NP
8	9-6611-2	Bracket Assembly (LH)	KJ	1
9	9-6611-3	Bracket Assembly (RH)	KJ	1
10	9-6610	Bracket—Elevator and rudder control (LH)	KJ	1
	9-6610-1	Bracket—Elevator and rudder control (RH)	KJ	1
	15-11641	Installation—Bomb control bracket	HA	NP
11	15-11641-1	Bracket Assembly	HA	1
12	15-11634	Bracket—Inboard bomb control	HA	1
13	15-11641-2	Bracket Assembly	HA	1
14	6-14513	Bracket—Inboard bomb control	HA	1
15	15-11641-3	Bracket Assembly	HA	1
16	6-14771	Bracket—Inboard bomb control	HA	1
17	15-11641-4	Bracket Assembly	HA	1
18	9-6143	Bracket—Emergency bomb release	HA	1
19	15-11641-5	Bracket Assembly	HA	1
20	15-11656	Bracket—External bomb control	HA	1
21	6-14528	Control Assembly—Bomb release	HA	1
22	3-12090-6	Crank Assembly—Control	HA	1
	15-11921	Installation—Elevator and rudder control (LH)	KJ	NP
	15-11921-1	Installation—Elevator and rudder control (RH)	KJ	NP
23	15-11921-2	Bracket Assembly (LH)	KJ	1
24	15-11921-3	Bracket Assembly (RH)	KJ	1
25	15-11920-4	Bracket—Elevator and rudder control (LH)	KJ	1
	15-11920-5	Bracket—Elevator and rudder control (RH)	KJ	1
26	15-7372	Installation—Bulkhead door station 4 (see fig. 70)	All	NP
	55-4100	Installation—Bomb door control support (LH)	All	NP
	55-4100-1	Installation—Bomb door control support (RH)	All	NP
27	3-7838	Support Assembly (LH)	All	1
28	3-7838-1	Support Assembly (RH)	All	1
29	3-7838-2	Support (LH)	All	1
	3-7838-3	Support (RH)	All	1
30	07196	Cup (Timken)	All	1
31	A4138	Cup (Timken)	All	1
32	AN3-6A	Bolt—Aircraft	All	12
	AN365-1032	Nut—Self-locking	All	12
	75-3441-650	Installation—Station 4 front stub spar (LH)	All	NP
	75-3441-651	Installation—Station 4 front stub spar (RH)	All	NP
33	46-3851-401	Terminal—Upper station 4 (LH forward)	All	1
34	46-3851-400	Terminal—Upper station 4 (RH forward)	All	1
35	6-3851	Terminal—Upper station 4 (LH aft)	All	1
36	6-3851-1	Terminal—Upper station 4 (RH aft)	All	1
37	6-3850-8	Fitting Assembly—Shear terminal	All	1
38	6-3850-9	Fitting Assembly—Shear terminal	All	1
39	46-3852	Terminal—Lower forward	All	1
40	56-3852-500	Terminal—Lower station 4 (LH aft)	All	1
41	56-3852-501	Terminal—Lower station 4 (RH aft)	All	1
	6-14550	Installation—Bomb door control bracket (LH)	HA	NP
42	6-14550-1	Bracket Assembly	HA	1
43	6-14533	Bracket—Bomb door control	HA	1
	6-14557	Installation—Bomb door control bracket (RH)	HA	NP
44	6-14557-1	Bracket Assembly	HA	1
45	6-14522	Bracket—Bomb door control	HA	1
	57-992	Installation—Outboard bomb control bracket (LH)	HA	NP
46	3-7366	Bracket Assembly—Outboard bomb control	HA	1
47	3-7366-1	Bracket Assembly—Outboard bomb control	HA	1
48	3-12090-6	Crank Assembly—Control	HA	1
49	BAC1604-34	Spacer—1-4 bolt	HA	1
50	BAC1604-31	Spacer—1-4 bolt	HA	1
51	AN4-22	Bolt—Aircraft	HA	1
	AN310-4	Nut—Aircraft castle	HA	1
	57-992-500	Installation—Outboard bomb control bracket (RH)	HA	NP
52	21-9064	Bracket Assembly—Outboard bomb control	HA	1
53	21-9064-1	Bracket Assembly—Outboard bomb control	HA	1
54	3-12090-6	Crank Assembly—Control	HA	1
55	BAC1604-34	Spacer—1-4 bolt	HA	1
56	BAC1604-31	Spacer—1-4 bolt	HA	1
57	AN4-22	Bolt—Aircraft	HA	1
	AN310-4	Nut—Aircraft castle	HA	1
	6-14790	Installation—External bomb control bracket (LH)	HA	NP
	6-14790-1	Installation—External bomb control bracket (RH)	HA	NP
	6-14790-2	Bracket Assembly (LH)	HA	1
	6-14790-3	Bracket Assembly (RH)	HA	1
58	9-6134	Bracket—External bomb control (LH)	HA	1
59	9-6134-1	Bracket—External bomb control (RH)	HA	1
60	51-7	Cone—Jacking	All	1
61	AN365-820	Nut—Self-locking	All	1
62	21-7484	Lug—Guard rail	All	1
63	21-7484-2	Lug—Guard rail	All	1
	55-7311	Installation—Equipment	All	NP
64	3-7194-7	Rope Assembly—Guard rail	All	2
	50-75	Snap—Swivel harness (Covert)	All	2

PUBLISHED BY AVIALOGS.COM

FUSELAGE

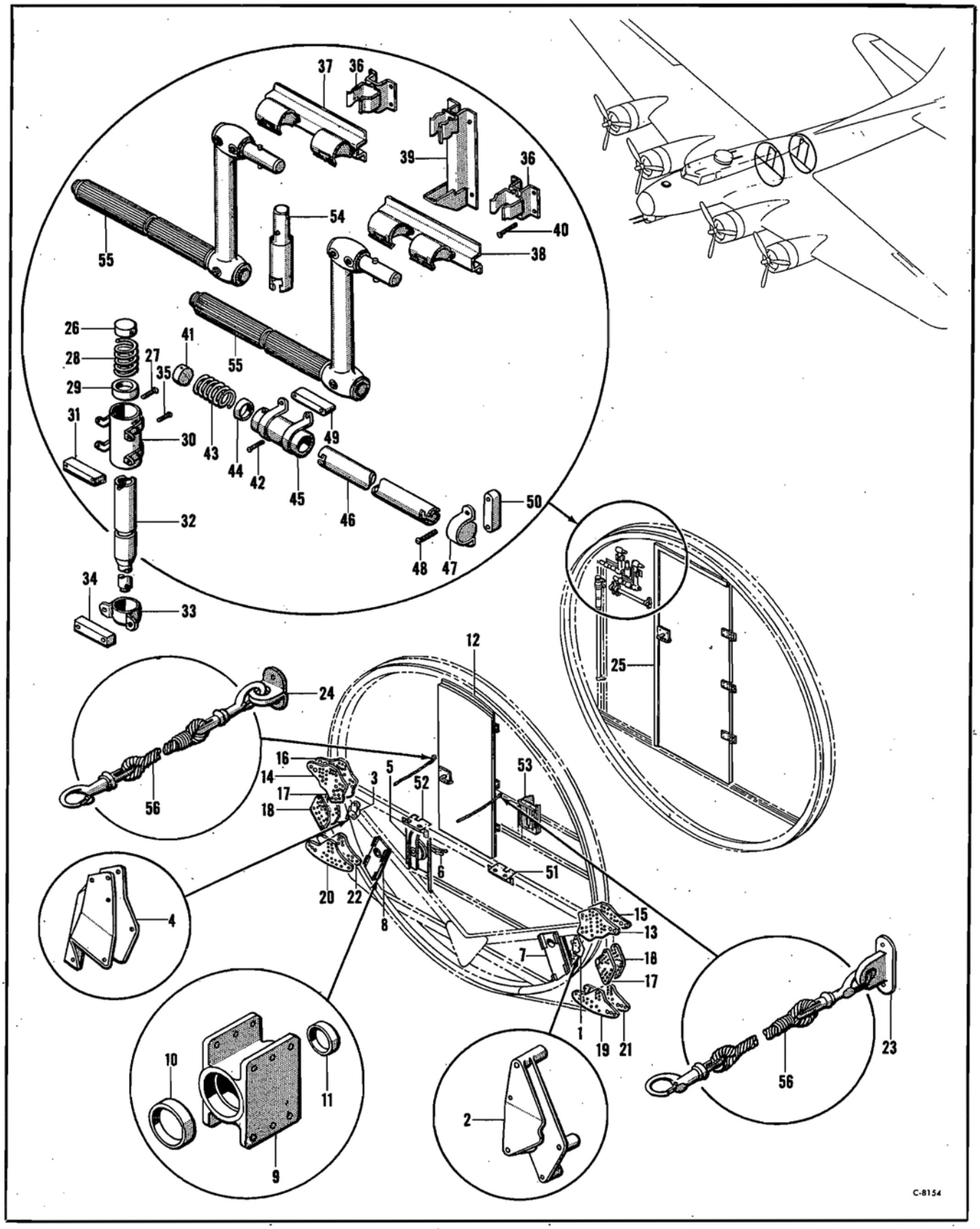

Figure 69—Radio Compartment Bulkhead Fittings

PUBLISHED BY AVIALOGS.COM

FUSELAGE

Radio Compartment Bulkhead Fittings

Figure & Index No.	Part Number	1 2 3 4 5 6 7 Nomenclature	Usage Code	Units Per Assy.
		Radio Compartment Bulkhead Fittings		
	55-7330	Fuselage Assembly—Forward section (see fig. 71)	All	Ref
	95-3425	Bulkhead Assembly—Station 5	All	1
	9-7312	Installation—Cabin heat control bracket	XM	NP
69-1	9-7312-1	Bracket Assembly	XM	1
2	9-7266	Bracket—Cabin heat control	XM	1
	9-7281	Installation—Cabin heat control bracket	XM	NP
3	9-7281-1	Bracket Assembly	XM	1
4	9-7280	Bracket—Cabin heat control	XM	1
5	15-13012	Installation—Cabin heat support (see fig. 144)	All	NP
6	15-13013	Installation—Cabin heat support (see fig. 144)	All	NP
	49-2002	Installation—Bomb door control support (LH)	All	NP
	49-2002-1	Installation—Bomb door control support (RH)	All	NP
7	49-2002-415	Support Assembly (LH)	All	1
8	49-2002-416	Support Assembly (RH)	All	1
	3-7838-3	Support Assembly (LH)	All	1
	3-7838-4	Support Assembly (RH)	All	1
9	3-7838-7	Support (LH)	All	1
	3-7838-6	Support (RH)	All	1
10	O7196	Cup (Timken)	All	1
11	A4138	Cup (Timken)	All	1
12	15-7372-1	Installation—Bulkhead 5 door (see fig. 70)	All	NP
	75-3440	Installation—Station 5 rear stub spar terminal (LH)	All	NP
	75-3440-1	Installation—Station 5 rear stub spar terminal (RH)	All	NP
13	6-3854-1	Terminal—Upper station 5 (LH forward)	All	1
14	6-3854	Terminal—Upper station 5 (RH forward)	All	1
15	46-3854-400	Terminal—Station 5 upper rear (LH)	All	1
16	46-3854-401	Terminal—Station 5 upper rear (RH)	All	1
17	6-3856-9	Fitting Assembly—Shear terminal	All	1
18	6-3856-10	Fitting Assembly—Shear terminal	All	1
19	46-3855-401	Terminal—Station 5 lower front (LH)	All	1
20	46-3855-400	Terminal—Station 5 lower front (RH)	All	1
21	56-3855-500	Terminal—Station 5 lower rear (LH)	N	1
	56-3855-502	Terminal	WF	1
22	56-3855-501	Terminal—Station 5 lower rear (RH)	N	1
	56-3855-502	Terminal	WF	1
23	21-7512	Lug—Guard rail	All	1
24	21-7484	Lug—Guard rail	All	1
	15-7015	Bulkhead Assembly—Station 6	All	1
25	15-7372-2	Installation—Bulkhead 6 door (see fig. 70)	All	NP
	6-8988	Installation—Starter extension support	All	NP
	6-8988-1	Bracket Assembly	All	1
26	41-7942	Cover—Crank extension tube	All	1
27	AN515-8-24	Screw—Round head	All	1
	AN365-832	Nut—Self-locking	All	1
28	41-7944	Spring—Compression	All	1
29	41-7946	Disc—Crank extension	All	1
30	41-7943	Tube Assembly—Crank extension	All	1
31	6-8988-3	Block	All	1
32	3-12408	Extension Assembly—Starter crank	All	1
33	41-7945	Cup Assembly—Crank extension	All	1
34	6-8988-4	Block	All	1
35	AN515-8-20	Screw—Round head	All	6
	AN365-832	Nut—Self-locking	All	6
	14-1692-9	Installation—Hand crank and extension support	All	NP
36	14-1692-4	Clip Assembly	All	2
37	14-1692-1	Clip Assembly	All	1
38	14-1692-12	Clip Assembly	XM	1
39	14-1692-13	Support Assembly—Crank extension	XM	1
40	AN520-10R8	Screw—Round head	All	24
	AN365-1032	Nut—Self-locking	All	24
	6-8988-1	Bracket Assembly—Extension support	All	1
41	41-9742	Cover	All	1
42	AN515-8-24	Screw—Round head	All	1
	AN365-832	Nut—Self-locking	All	1
43	41-7944	Spring—Compression	All	1
44	41-7946	Disc—Crank extension	All	1
45	41-7943	Tube Assembly—Crank extension	All	1
46	21-9586	Extension—Crank	All	1
47	41-7945	Cup Assembly—Crank extension	All	1
48	AN515-8R20	Screw—Round head	All	6
	AN365-832	Nut—Self-locking	All	6
49	14-1692-7	Block	All	1
50	14-1692-8	Block	All	1
	6-14134	Installation—Fuel valve bracket (LH) (see fig. 21)	All	NP
	6-14134-1	Installation—Fuel valve bracket (RH) (see fig. 21)	All	NP
51	6-14136	Bracket Assembly—Fuel valve (LH)	D	1
	6-14136-3	Bracket Assembly (LH)	EE	1
52	6-14136-1	Bracket Assembly—Fuel valve (RH)	D	1
	6-14136-4	Bracket Assembly (RH)	EE	1
	9-7996	Installation—D-5 fuel valve (see fig. 21)	PJ	NP
53	9-7996-1	Bracket	All	1
	55-7311	Installation—Equipment	All	NP
54	3-23558	Extension Assembly—Starter crank	All	1
55	AN4098-1	Crank—Inertia starter hand GFE	All	2
56	3-7194-7	Rope Assembly—Guard rail	All	2
	50-75	Snap—Swivel harness (Covert)	All	2

PUBLISHED BY AVIALOGS.COM

FUSELAGE

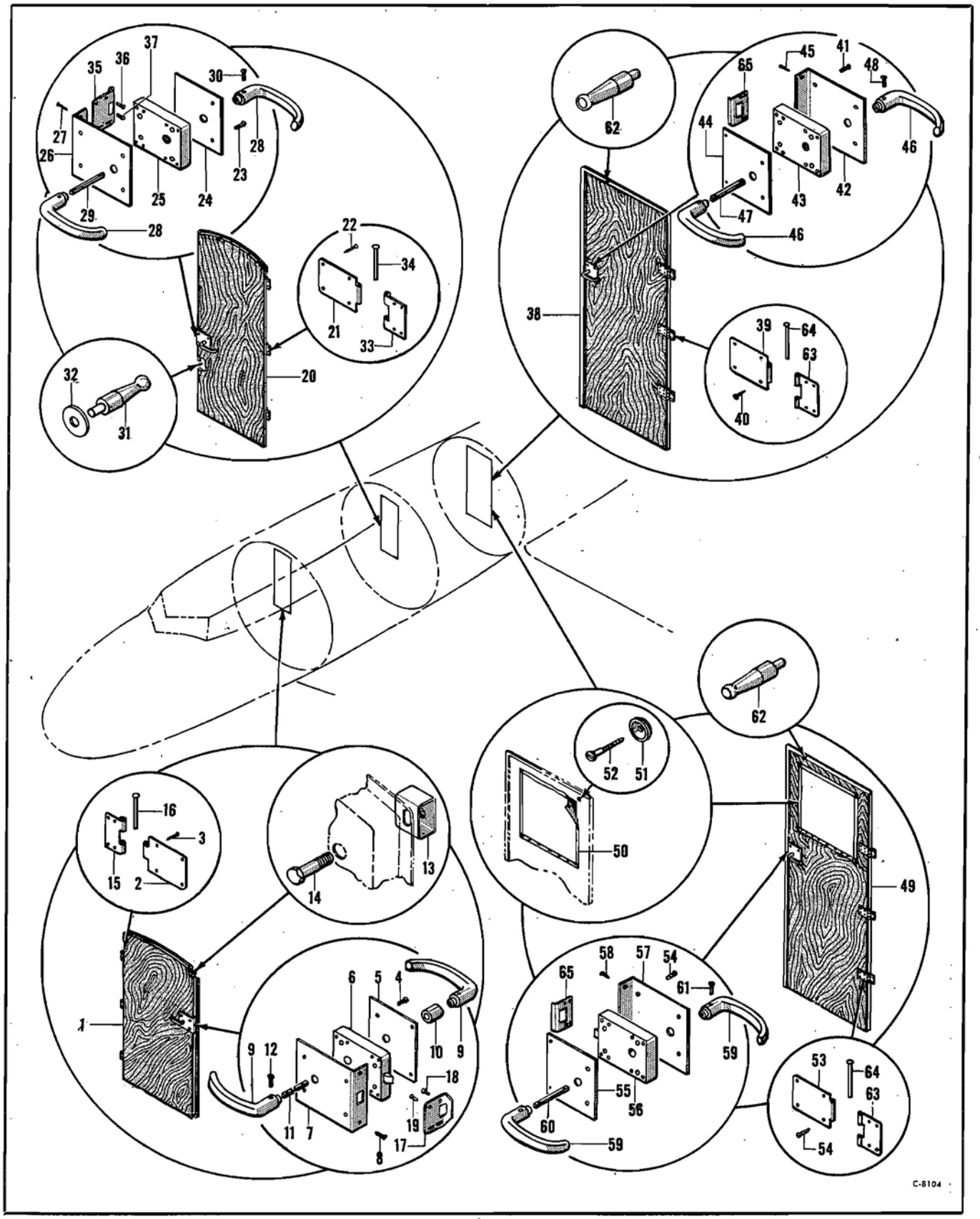

Figure 70—Forward Section Bulkhead Doors

PUBLISHED BY AVIALOGS.COM

FUSELAGE

Forward Section Bulkhead Doors

Figure & Index No.	Part Number	1 2 3 4 5 6 7 Nomenclature	Usage Code	Units Per Assy.
		Forward Section Bulkhead Doors		
	55-7330	Fuselage Assembly—Forward section (see fig. 71)	All	Ref
	85-3424-767	Bulkhead Assembly—Station 4 (see fig. 68)	N	Ref
	85-3424-776	Bulkhead Assembly—Station 4 (see fig. 68)	UF	Ref
	85-3424-772	Bulkhead Assembly—Station 4 (see fig. 68)	KJ	Ref
	15-7372	Installation—Station 4 bulkhead door	All	NP
70-1	15-7372-4	Door Assembly	All	1
2	1-18266-2	Hinge—Bulkhead door half	All	3
3	BAC1448-10-14	Screw—Oval head	EA	12
4	NAS222DD-9	Screw—Brazier head	All	8
5	15-7372-22	Plate—Latch	All	1
6	54B	Latch Assembly (Rite Hardware Co.)	All	1
7	15-7372-23	Plate—Latch	All	1
8	BAC1449-8-8	Screw—Flat head	All	2
9	380B	Lever—Door latch (Rite Hardware Co.)	All	2
10	1-22694	Spacer—Special	All	1
11	51-144-3	Spindle—Latch	All	1
12	AN505-6-8	Screw—Flat head	All	2
13	3-19058	Stud Assembly—Door catch	AQ	1
	P101	Stud (Tinnerman)	AQ	1
14	AN4-13A	Bolt—Aircraft	AQ	1
	AN970-4	Washer—Flat	AQ	1
	AN365-428	Nut—Self-locking	AQ	1
15	1-18266-1	Hinge—Bulkhead door half	All	3
16	1-18266-3	Pin—Loose	All	3
	41-9466	Installation—Door keeper	All	NP
17	41-9466-2	Keeper	All	1
18	AN505-6-6	Screw—Flat head	All	2
	AN365-632	Nut—Self-locking	All	2
19	AN526-632R6	Screw—Truss head	All	2
	AN365-632	Nut—Self-locking	All	2
	95-3425	Bulkhead Assembly—Station 5 (see fig. 69)	All	Ref
	15-7372-1	Installation—Station 5 bulkhead door	All	NP
20	15-7372-5	Door Assembly	All	1
21	1-18266-2	Hinge—Bulkhead door half	All	3
22	BAC1448-10-14	Screw—Oval head	EA	12
23	NAS222DD-9	Screw—Brazier head	All	8
24	15-7372-22	Plate—Latch	All	1
25	54B	Latch Assembly (Rite Hardware Co.)	All	1
26	15-7372-23	Plate—Latch	All	1
27	BAC1449-8-8	Screw—Flat head	All	2
28	380B	Lever—Door latch (Rite Hardware Co.)	All	2
29	51-144-1	Spindle—Latch	All	1
30	AN506-6-8	Screw—Self-tapping flat head	Alll	2
31	41-353-15-8	Pin—Door catch	All	1
32	940-11	Washer—Burr	All	1
33	1-18266-1	Hinge—Bulkhead door half	All	3
34	1-18266-3	Pin—Loose	All	3
	41-9466	Installation—Door keeper	All	NP
35	41-9466-2	Keeper	All	1
36	AN505-6-6	Screw—Flat head	All	2
	AN365-632	Nut—Self-locking	All	2
37	AN525-632R6	Screw—Truss head	All	2
	AN365-632	Nut—Self-locking	All	2
	15-7015	Bulkhead Assembly—Station 6 forward (see fig. 69)	All	Ref
	15-7372-2	Installation—Station 6 bulkhead door	All	NP
38	15-7372-6	Door Assembly	WG	1
39	1-18266-2	Hinge—Bulkhead door half	WG	3
40	BAC1448-10-14	Screw—Oval head	WG	12
41	BAC1470-428-7D	Screw—Button head	WG	8
42	15-7372-22	Plate—Latch	WG	1
43	54B	Latch Assembly (Rite Hardware Co.)	WG	1
44	15-7372-23	Plate—Latch	WG	1
45	BAC1449-8-8	Screw—Flat head	WG	2
46	380B	Lever—Door latch (Rite Hardware Co.)	WG	2
47	51-144-1	Spindle	WG	1
48	AN506-6-8	Screw—Self-tapping flat head	WG	2
49	15-7372-71	Door Assembly	WG	1
50	15-7372-84	Curtain Assembly	WG	1
51	AN227-8B	Fastener—Snap	WG	2
52	AN550-6R6	Screw—Flat head wood	WG	2
53	1-18266-2	Hinge—Bulkhead door half	WG	3
54	NAS222DD-9	Screw—Brazier head	WG	12
55	15-7372-22	Plate—Latch	WG	1
56	54B	Latch Assembly (Rite Hardware Co.)	WG	1
57	15-7372-23	Plate—Latch	WG	1
58	BAC1449-8-8	Screw—Flat head	WG	2
59	380B	Lever—Door latch (Rite Hardware Co.)	WG	2
60	51-144-1	Spindle—Latch	WG	1
61	AN506-6-8	Screw—Self-tapping flat head	WG	2
62	41-353-20-7	Pin—Door catch	All	1
63	1-18266-1	Hinge—Bulkhead door half	All	3
64	1-18266-3	Pin—Loose	All	3
	1-20555	Installation—Door keeper	All	NP
65	1-20555-1	Keeper	All	1

PUBLISHED BY AVIALOGS.COM

FUSELAGE

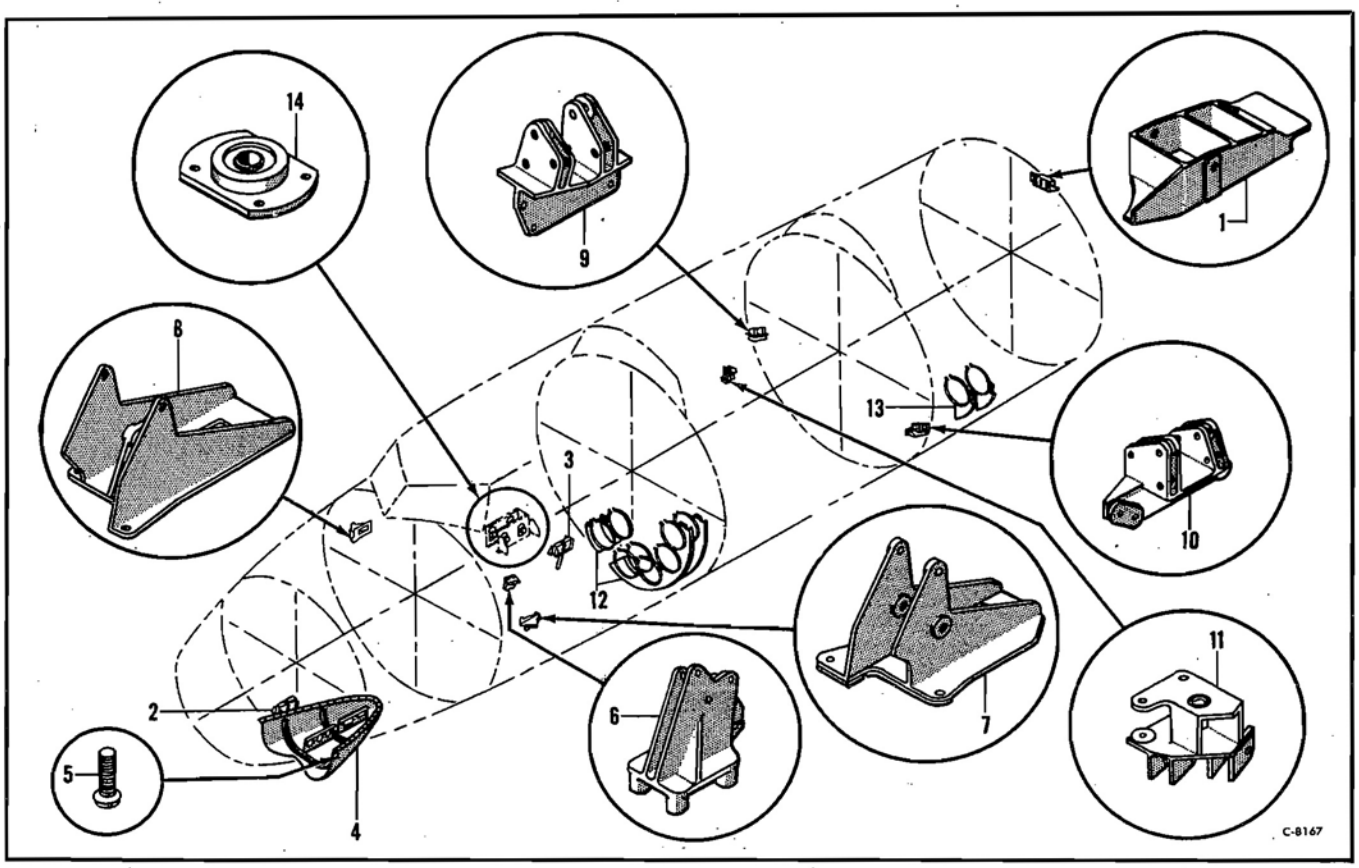

Figure 71—Forward Section Miscellaneous Fittings

Forward Section Miscellaneous Fittings

Figure & Index No.	Part Number	1 2 3 4 5 6 7 Nomenclature	Usage Code	Units Per Assy.
		Forward Section Miscellaneous Fittings		
	55-7377	Fuselage Assembly	All	1
	7-1517	Installation—Control cables bracket (LH)	All	NP
	7-1517-1	Installation—Control cables bracket (RH)	All	NP
71-1	3-13454	Bracket—Pulley (LH)	All	1
	3-13454-1	Bracket—Pulley (RH)	All	1
	55-7330	Fuselage Assembly—Forward section	All	1
2	9-7955	Installation—Compass antenna mast (see fig. 127)	All	NP
3	9-7956	Installation—Compass antenna mast (see fig. 127)	All	NP
	12-848	Installation—Chin turret fairing	All	NP
4	12-848-9	Fairing Assembly	All	1
5	AN526-1032R10	Screw—Truss head	All	20
	55-5685	Installation—Control cables bracket (LH)	All	NP
	55-5685-407	Installation—Control cables bracket (RH)	All	NP
	9-6469	Installation—Emergency bomb release bracket (LH)	HA	NP
	9-6469-1	Bracket Assembly	HA	1
6	9-6291	Bracket—Emergency bomb release	All	1
	15-10960	Installation—Aileron control bracket LH	All	NP
	15-10960-1	Bracket Assembly	All	1
7	9-5622	Bracket—Aileron control LH	All	1
	15-10973	Installation—Aileron control bracket RH	All	NP
	15-10973-1	Bracket Assembly	All	1
8	9-5625	Bracket—Aileron control RH	All	1
	6-15541	Installation—Cabin heat control	LM	NP
	6-15541-2	Bracket Assembly	LM	1
9	9-7284-2	Bracket—Cabin heat control	LM	1
	9-7306	Installation—Heat control bracket	LM	NP
	9-7306-1	Bracket Assembly	LM	1
10	9-7287	Bracket—Cabin heat control	LM	1
	9-6608	Installation—Elevator & rudder control bracket (LH)	KJ	NP
	9-6608-1	Installation—Elevator & rudder control bracket (RH)	KJ	NP
	9-6608-2	Bracket Assembly (LH)	KJ	1
	9-6608-3	Bracket Assembly (RH)	KJ	1
11	9-6607	Bracket—Elevator and rudder control	KJ	1
	9-6607-2	Bracket—Elevator and rudder control	KJ	1
12	15-7373-25	Installation—Oxygen cylinder bracket (see fig. 134)	All	NP
13	15-7577	Installation—Oxygen cylinder bracket (see fig. 134)	All	NP
	8-1526	Installation—Vacuum & heat controls support	All	NP
	8-1526-12	Channel Assembly	RA	1
	8-1526-13	Channel Assembly	RA	1
	8-1526-17	Channel Assembly	SJ	1
	8-1526-18	Channel Assembly	SJ	1
14	41-2476	Housing Assembly—Bearing	EA	2
	1-30187	Bearing—Phenolic	LH	2

PUBLISHED BY AVIALOGS.COM

FUSELAGE

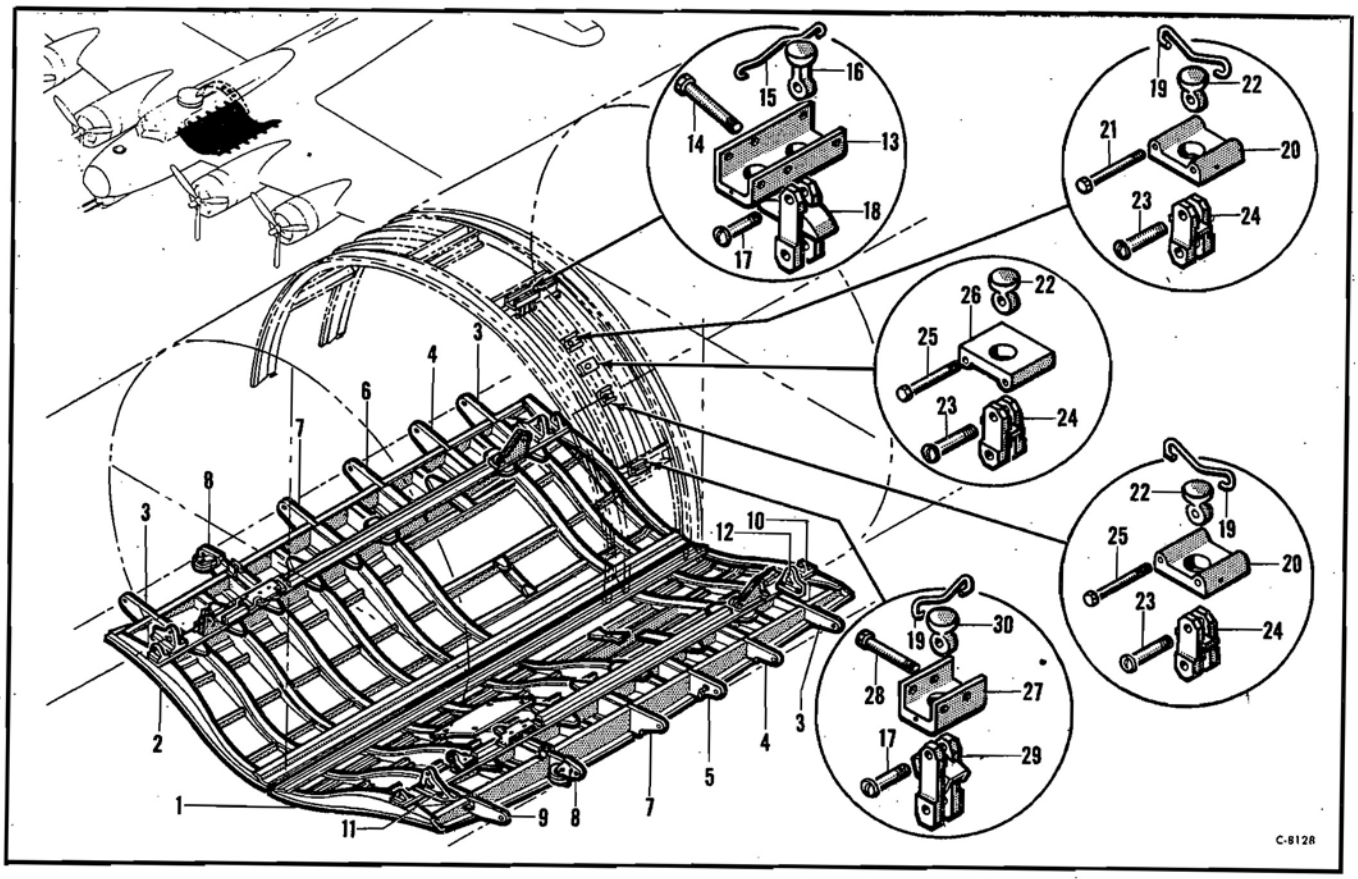

Figure 72—Bomb Doors and Bomb Rail Support

Bomb Doors and Bomb Rail Support

Figure & Index No.	*Part Number*	*1 2 3 4 5 6 7 Nomenclature*	*Usage Code*	*Units Per Assy.*
		Bomb Doors and Bomb Rail Support		
	55-7330	Fuselage Assembly—Forward section (see fig. 71)	All	Ref
72-1	75-4122	Door Assembly—Bomb (LH)	All	1
2	75-4122-1	Door Assembly—Bomb (RH)	All	1
3	3-7941	Hinge Assembly—Bomb door	All	2
4	3-7942	Hinge Assembly—Bomb door	All	1
5	3-7942-10	Hinge Assembly—Bomb door (LH)	All	1
6	3-7942-1	Hinge Assembly—Bomb door (RH)	All	1
7	3-7942-2	Hinge Assembly—Bomb door	All	1
8	3-7943	Hinge Assembly—Bomb door	All	1
9	3-7941-6	Hinge Assembly—Bomb door (LH)	All	1
	AN200K4	Bearing—Heavy duty	All	1
10	41-9998	Terminal—Bomb door check	All	2
11	3-11770	Fitting Assembly—Bomb door rear (LH)	All	1
	3-11770-1	Fitting Assembly—Bomb door rear (RH)	All	1
12	3-11771	Fitting Assembly—Bomb door front (LH)	All	1
	3-11771-1	Fitting Assembly—Bomb door front (RH)	All	1
	75-3469	Installation—Bomb rail support	All	NP
13	51-174-2	Socket—Bomb hoist pulley bracket (LH)	All	1
	51-174-1	Socket—Bomb hoist pulley bracket (RH)	All	1
14	AN4-21A	Bolt—Aircraft	All	5
	AN4-22A	Bolt—Aircraft	All	1
15	41-4196	Spring—Universal hold down	All	2
16	41-4188-1	Universal—Bomb hoist pulley bracket	All	4
17	AN25-20	Bolt—Clevis	All	6
18	41-9798	Bracket Assembly—Bomb hoist 3 1-2 in. pulley	All	4
19	41-4190	Spring—Universal hold down	All	6
20	41-9755	Socket—Universal pulley bracket	All	4
21	AN3-27A	Bolt—Aircraft	All	2
22	41-4188	Universal—Bomb hoist pulley bracket	PA	6
	41-4188	Universal—Bomb hoist pulley bracket	KJ	2
	41-4188-5	Universal—Bomb hoist pulley bracket	KJ	4
23	AN24-17	Bolt—Clevis	All	6
24	41-9797	Bracket Assembly—Bomb hoist 2 in. pulley	All	6
25	AN3-25A	Bolt—Aircraft	All	8
26	41-9755-1	Socket—Universal pulley bracket	All	2
27	51-172	Socket—Bomb hoist pulley bracket	All	2
28	AN4-22A	Bolt—Aircraft	All	4
29	41-9798-1	Bracket Assembly—Bomb hoist 3 1-2 in. pulley	All	2
30	41-4188-2	Universal—Bomb hoist pulley bracket	All	2

PUBLISHED BY AVIALOGS.COM

FUSELAGE

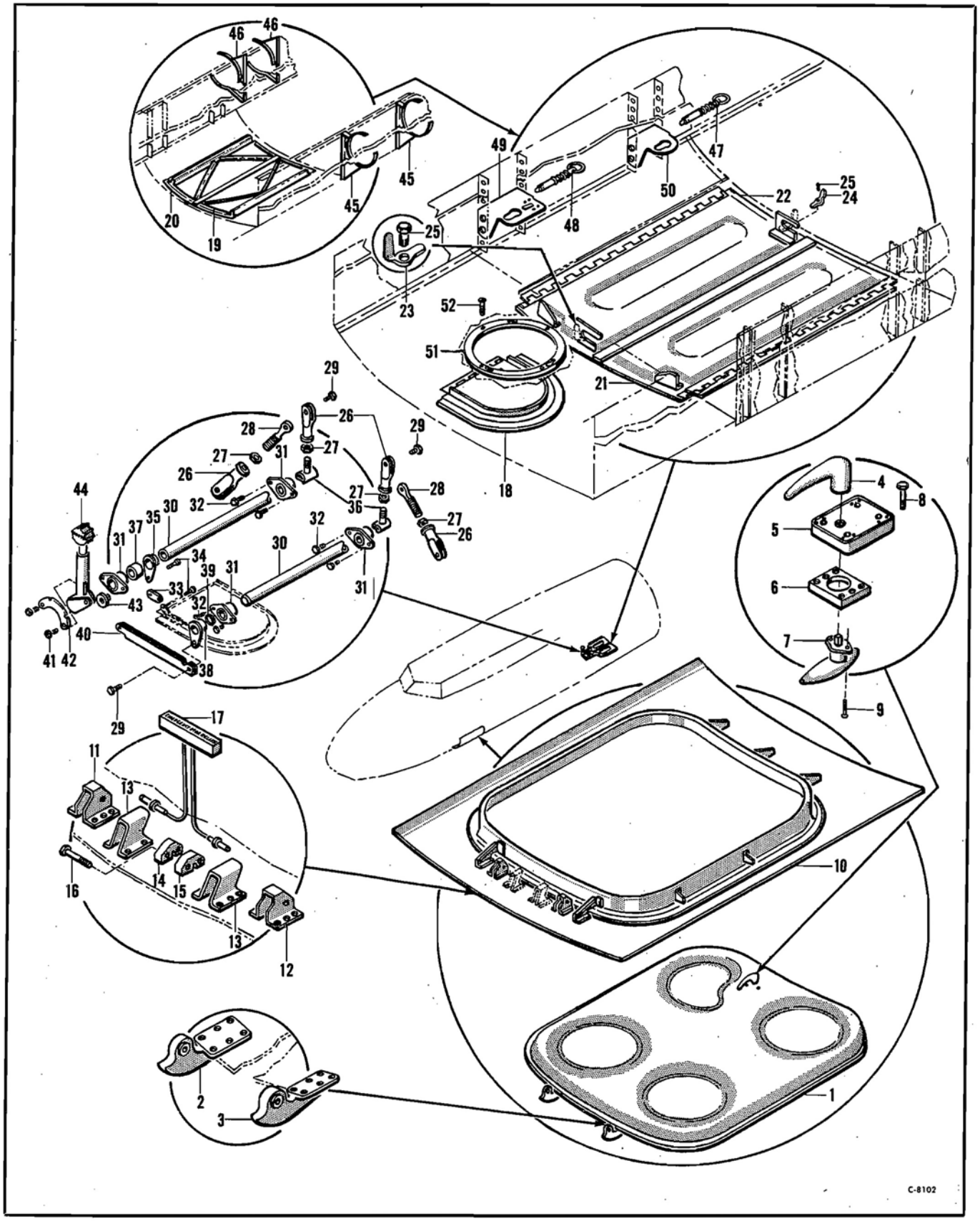

Figure 73—Forward Entrance Door and Camera Door

PUBLISHED BY AVIALOGS.COM

FUSELAGE

Forward Entrance Door and Camera Door

Figure & Index No.	Part Number	1 2 3 4 5 6 7 Nomenclature	Usage Code	Units Per Assy.
		Forward Entrance Door and Camera Door		
	55-7330	Fuselage Assembly—Forward section (see fig. 71)	All	Ref
	75-3468	Installation—Forward entrance door	All	NP
73-1	75-3468-600	Door Assembly	EC	1
	75-3468-621	Door Assembly	PO	1
2	3-6475-3	Hinge Assembly—Cabin door (LH)	All	1
	3-6475-7	Hinge	GB	1
	BAC344-4-439	Bushing	GB	1
	3-6475-3	Hinge	PL	1
3	3-6475-2	Hinge Assembly—Cabin door (RH)	All	1
	3-6475-6	Hinge	GB	1
	BAC344-4-439	Bushing	GB	1
	3-6475-2	Hinge	PL	1
4	1-17640	Lever—Door latch	CB	1
	380E	Lever (Rite Hardware Co.)	GL	1
	UB1	Handle Assembly (Rite Hardware Co.)	PO	1
5	54-1A	Latch Assembly (Rite Hardware Co.)	All	1
6	75-3468-605	Block	All	1
7	25-1H	Knob Assembly (Rite Hardware Co.)	EC	1
	25-1N	Knob Assembly (Rite Hardware Co.)	PO	1
8	AN510-10R28	Screw—Flat head	E	2
	AN365-1032	Nut—Self-locking	All	2
9	AN3-10	Bolt—Aircraft	All	2
10	75-3468-620	Frame Assembly	All	1
11	41-9992	Hinge Assembly—Forward entrance door	All	1
	21-1022-8-5	Bushing—Serrated	All	2
12	41-9992-1	Hinge Assembly—Forward entrance door	All	1
	21-1022-8-5	Bushing—Serrated	All	2
13	3-27814	Channel Assembly—Forward door	All	2
	1-20521	Installation—Door release fairlead	All	NP
14	1-19001-49	Fairlead	All	2
15	3-27816	Fairlead	XM	1
16	AN3-17A	Bolt—Aircraft	All	2
	AN960-10	Washer—Plain	All	2
	AN365-1032	Nut—Self-locking	All	2
17	1-18557	Handle Assembly—Door release	All	1
	75-3577	Installation—Radio and gunners floor (see fig. 66)	All	NP
	75-3686	Installation—Camera and finder door	All	NP
18	75-3686-17	Door Assembly—View finder	All	1
19	75-3686-522	Door Assembly—LH camera	Y	1
20	75-3686-523	Door Assembly—RH camera	Y	1
21	15-11929	Door Assembly—Camera (LH)	WG	1
22	15-11929-1	Door Assembly—Camera (RH)	WG	1
23	1-20382	Latch—Camera door	All	1
24	1-20382-1	Latch—Camera door	All	1
25	AN3-5	Bolt—Aircraft	All	4
26	AN486-4	Clevis—Rod end adjusting	All	4
27	AN316-4R	Nut—Aircraft check	All	4
28	1-17507	Stud—Camera door control	All	2
29	AN3-4	Bolt—Aircraft	All	4
	AN310-3	Nut—Aircraft castle	All	4
30	1-18415	Tube Assembly—Torque	All	2
31	41-9779	Bearing—Torque tube	All	4
32	AN3-3A	Bolt—Aircraft	All	6
	AN365-1032	Nut—Self-locking	All	6
33	21-7008-5	Link—Camera door control	All	1
34	AN23-8	Bolt—Clevis	All	2
	AN960-10	Washer—Plain	All	2
	AN320-3	Nut—Aircraft shear	All	2
35	21-7007-6	Crank Assembly—Camera door control	All	1
36	AN386-1-7	Pin—Threaded taper	All	2
	AN975-3	Washer—Taper pin	All	2
	AN364-1032	Nut—Self-locking	All	1
37	51-226-32	Spacer—Tube	All	2
38	21-7007-5	Crank Assembly—Camera door control	All	1
39	51-226-24	Spacer—Tube	All	1
40	21-7030-1	Link—Camera door control	All	1
41	NAS224-13	Screw—Brazier head Phillips head	All	2
	AN365-1032	Nut—Self-locking	All	2
42	41-5456	Sector—Camera door control	All	1
43	41-5580	Spacer—Camera door control	All	2
44	3-9799-9	Lever Assembly—Camera door control	All	1
45	15-7588-1	Installation—Oxygen cylinder cradle (see fig. 134)	All	NP
46	15-7588-2	Installation—Oxygen cylinder cradle (see fig. 134)	All	NP
	75-3686-649	Beam Assembly—LH	All	1
	75-3686-650	Beam Assembly—RH	All	1
47	3-6738-5	Bolt Assembly—Self-locking	All	2
48	3-6738-6	Bolt Assembly—Self-locking	All	2
49	3-7022-1	Bracket Assembly—Camera support (RH)	All	1
	3-7022	Bracket Assembly—Camera support (LH)	All	1
	21-7021	Spring—Camera mount lock	All	1
	21-7020	Trigger—Camera mount lock	All	1
50	21-7013-1	Bracket—Camera support (RH)	All	1
	21-7013	Bracket—Camera support (LH)	All	1
	75-3686-652	Floor Assembly	All	1
51	AN7006-1	Ring—View finder mounting	All	1
52	AN505-6R8	Screw—Flat head	All	4
	AN505-6R12	Screw—Flat head	All	4

PUBLISHED BY AVIALOGS.COM

FUSELAGE

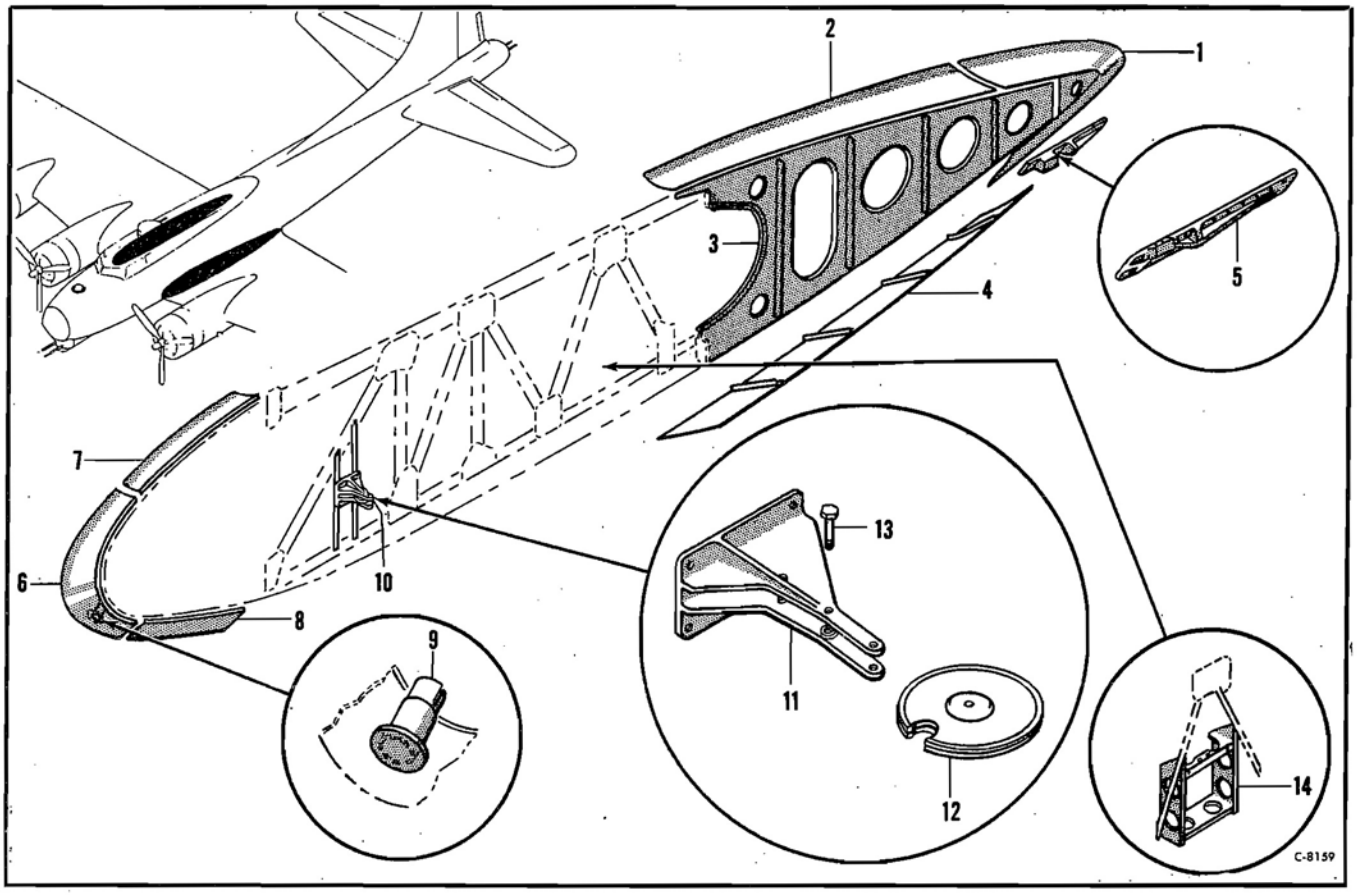

Figure 74—Wing Stub Fillet Fairing and Compression Strut Fittings

Wing Stub Fillet Fairing and Compression Strut Fittings

Figure & Index No.	Part Number	1 2 3 4 5 6 7 Nomenclature	Usage Code	Units Per Assy.
		Wing Stub Fillet Fairing and Compression Strut Fittings		
	55-7377	Fuselage Assembly (see fig. 71)	All	Ref
	95-3684-806	Installation—Rear wing fillet fairing (LH)	All	NP
	95-3684-807	Installation—Rear wing fillet fairing (RH)	All	NP
74-1	75-3684-710	Tip Assembly—Fillet (LH)	All	1
	75-3684-711	Tip Assembly—Fillet (RH)	All	1
2	75-3684-634	Fillet—Upper forward (LH)	All	1
	75-3684-635	Fillet—Upper forward (RH)	All	1
3	75-3684-712	Rib—Front (LH)	All	1
	75-3684-713	Rib—Front (RH)	All	1
4	75-3684-676	Fillet Assembly (LH)	All	1
	75-3684-633	Fillet Assembly (RH)	All	1
5	53-12016	Fitting—Compression strut tie (LH)	All	1
	53-12016-1	Fitting—Compression strut tie (RH)	All	1
	55-7330	Fuselage Assembly—Forward section (see fig. 71)	All	Ref
	55-3685	Installation—Front wing fillet fairing (LH)	All	NP
	55-3685-1	Installation—Front wing fillet fairing (RH)	All	NP
6	55-3685-400	Fillet—Leading edge (LH)	All	1
	55-3685-401	Fillet—Leading edge (RH)	All	1
7	55-3685-407	Fillet—Upper (LH)	All	1
	55-3685-408	Fillet—Upper (RH)	All	1
8	55-3685-409	Fillet—Lower (LH)	All	1
	55-3685-410	Fillet—Lower (RH)	All	1
	6-9582	Installation—Thermometer support (LH)	All	NP
	6-9582-1	Installation—Thermometer support (RH)	All	NP
9	6-9582-2	Support Assembly—Weld (LH)	All	1
	6-9582-2	Support Assembly—Weld (RH)	All	1
	85-3445	Installation—Body compression strut (LH)	All	NP
	85-3445-1	Installation—Body compression strut (RH)	All	NP
	9-6105	Installation—External bomb control bracket (LH)	All	NP
	9-6105-1	Installation—External bomb control bracket (RH)	All	NP
10	9-6105-2	Bracket Assembly (LH)	HA	1
	9-6105-3	Bracket Assembly (RH)	HA	1
11	9-6103	Bracket—External bomb control (LH)	HA	1
	9-6103-1	Bracket—External bomb control (RH)	HA	1
12	3-20831	Drum Assembly—Bomb control	HA	1
	AN207D4	Bearing	HA	1
13	AN4-15	Bolt—Aircraft	HA	1
	AN310-4	Nut—Aircraft castle	HA	1
	55-5785	Installation—Carbon dioxide cylinder support (RH side only)	KI	NP
14	55-5785-406	Support Assembly (see fig. 135)	KI	1

PUBLISHED BY AVIALOGS.COM

FUSELAGE

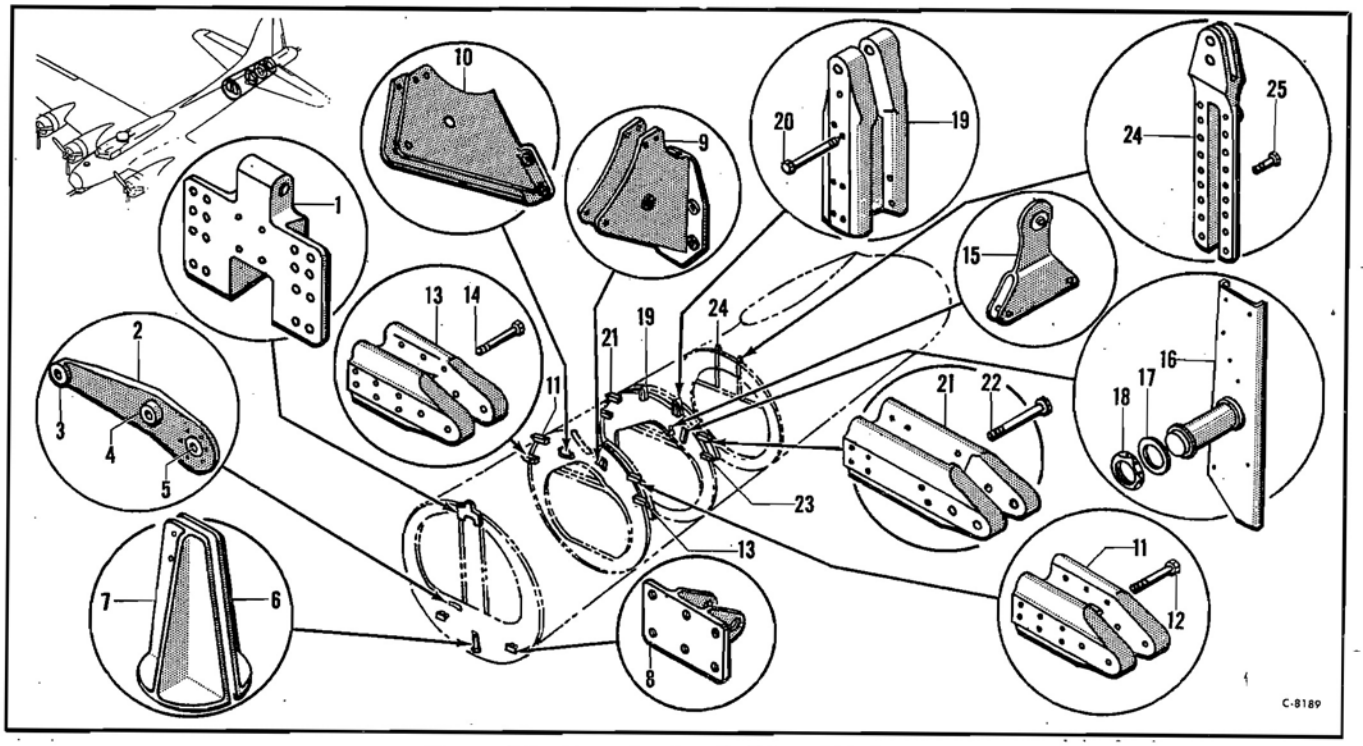

Figure 75—Rear Section Bulkhead Fittings

Rear Section Bulkhead Fittings

Figure & Index No.	Part Number	1 2 3 4 5 6 7 Nomenclature	Usage Code	Units Per Assy.
		Rear Section Bulkhead Fittings		
	65-7331	Fuselage Assembly—Rear section (see fig. 79)	OA	Ref
	65-7331-2	Fuselage Assembly—Rear section (see fig. 79)	KJ	Ref
	15-7017-31	Bulkhead Assembly—Station 7	All	1
75-1	9-3582	Fitting Assembly—Tail gear upper	All	1
	7-1507	Installation—Tail wheel lock bracket	All	NP
	49-11993	Lever Assembly—Tail wheel lock	All	1
2	49-11993-1	Lever	All	1
3	1-16964	Bushing—Tail wheel lock	All	1
4	BAC285-32S	Bushing	All	1
5	BC4W10	Bearing—Bell crank unit ball (Fafnir)	All	1
6	6-9287	Support—Jacking cone	All	1
7	6-9288	Support—Jacking cone	All	1
8	3-12974	Fitting—Tail gear lower	All	2
	55-7018	Bulkhead Assembly—Station 8	All	1
	55-7602	Installation—Control brackets	All	NP
	6-11307-17	Bracket Assembly—Rudder servo (LH)	All	1
	6-11307-1	Bracket Assembly—Rudder servo (RH)	All	1
9	6-11595	Bracket—Servo pulley (LH)	All	1
10	6-11588	Bracket—Servo pulley (RH)	All	1
11	6-10122-5	Terminal—Bulkhead station 8 (upper)	All	2
12	NAS56DD32-5A	Bolt—Close tolerance	All	12
13	6-10122-4	Terminal—Bulkhead station 8 (lower)	All	2
	AN960D616	Washer—Plain	All	36
	AN365D624	Nut—Self-locking	All	24
14	NAS56DD34A	Bolt—Close tolerance	All	12
	55-7019-416	Bulkhead Assembly—Station 9	All	1
	15-7603	Installation—Control brackets bulkhead 9	All	NP
	15-7603-6	Bracket Assembly	All	1
15	3-13584	Crank Assembly—Surface lock	All	1
	BC4W10	Bearing—Bell crank unit ball (Fafnir)	All	1
16	3-13618	Channel Assembly—Elevator stop	All	1
17	1-18652	Washer—Control surface lock	All	1
18	21-6758	Nut—1 1-4-18 lock	All	1
19	6-9204	Terminal—Bulkhead station 9	All	2
20	NAS55-33-5A	Bolt—Close tolerance	All	24
	AN960-516	Washer—Plain	All	12
	AN365-524	Nut—Self-locking	All	12
21	6-10122	Terminal—Bulkhead station 9 (upper)	All	2
22	NAS55-32-5A	Bolt—Close tolerance	All	4
	NAS56DD33A	Bolt—Close tolerance	All	8
	AN960D616	Washer—Plain	All	24
	AN365D624	Nut—Self-locking	All	24
23	6-10122-5	Terminal—Bulkhead station 9 (lower)	All	2
	15-7020	Bulkhead Assembly—Station 10	All	1
24	8-1273	Terminal—Fin rear spar bulkhead	All	2
25	AN3-11A	Bolt—Aircraft	All	4
	AN3-7A	Bolt—Aircraft	All	4
	AN960-10	Washer—Plain	All	4
	AN365-1032	Nut—Self-locking	All	4

PUBLISHED BY AVIALOGS.COM

FUSELAGE

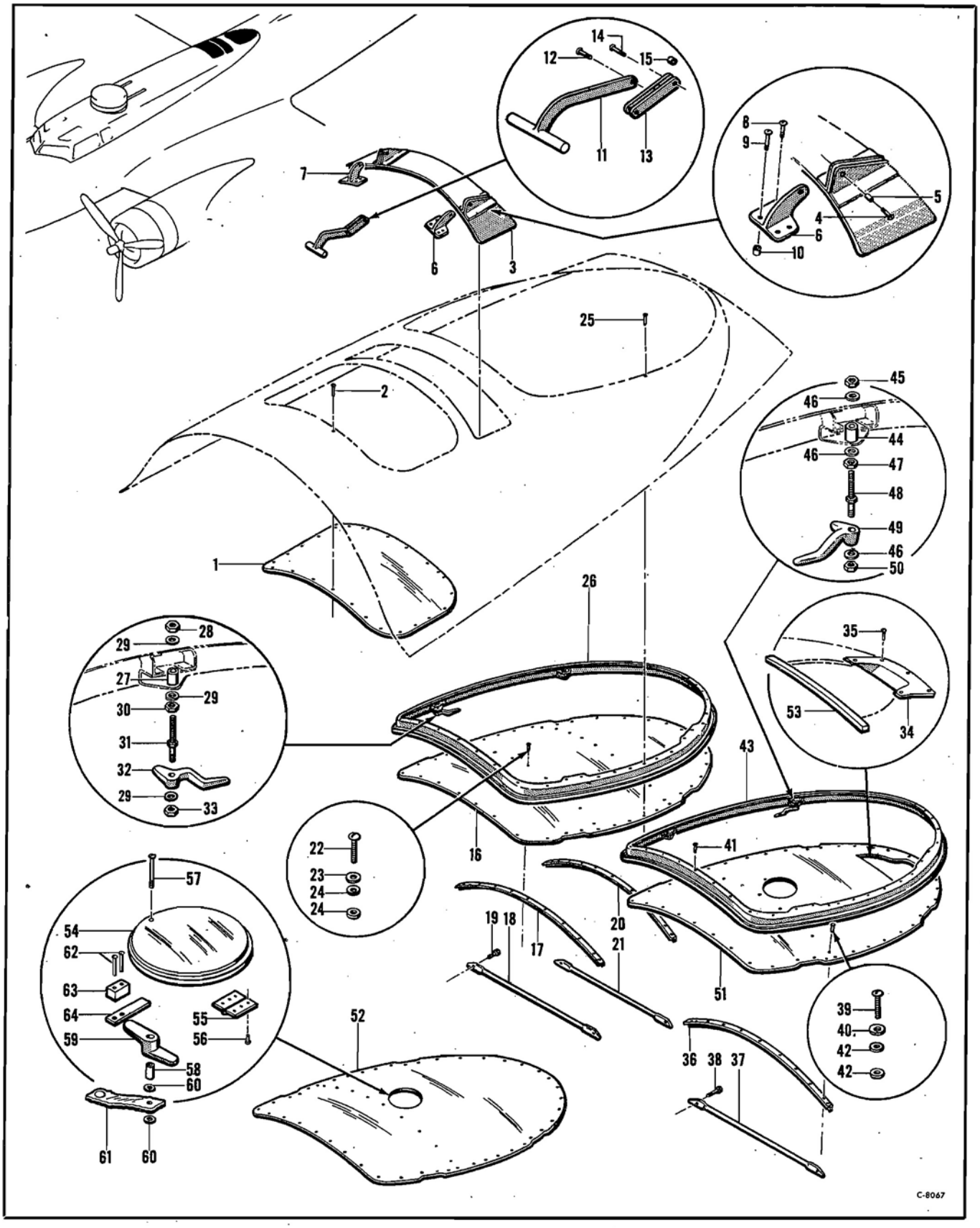

Figure 76—Top Gun Emplacement Windows

RESTRICTED
PUBLISHED BY AVIALOGS.COM

FUSELAGE

Top Gun Emplacement Windows

Figure & Index No.	Part Number	1 2 3 4 5 6 7 Nomenclature	Usage Code	Units Per Assy.
		Top Gun Emplacement Windows		
	55-6612	Installation—Top gun emplacement fairing (see fig. 65)	All	NP
	55-6612-495	Fairing Assembly	RC	1
	55-6612-552	Fairing Assembly	TP	1
76-1	55-6612-122	Panel	All	1
2	AN530-10R8	Screw—Sheet metal round head	All	22
	6612-10Z	Speednut (Tinnerman)	All	22
	15-6621	Installation—Upper gun emplacement spoiler	RC	NP
3	15-6621-1	Spoiler Assembly	RC	1
4	AN23-11	Bolt—Clevis	RC	2
	AN960-10	Washer—Plain	RC	2
	AN320-3	Nut—Aircraft shear	RC	2
5	BAC364-17S	Bushing—Bearing	RC	2
6	1-16378	Hinge Assembly—Spoiler (LH)	RC	1
7	1-16378-1	Hinge Assembly—Spoiler (RH)	RC	1
8	NAS221-11	Screw—Brazier head	RC	4
	AN365-1032	Nut—Self-locking	RC	8
9	NAS221-15	Screw—Brazier head	RC	4
	AN365-1032	Nut—Self-locking	RC	4
10	BAC1603-19	Spacer	RC	4
11	1-16380	Handle Assembly—Spoiler upper gun	RC	1
12	AN23-17	Bolt—Clevis	RC	1
	AN960-10	Washer—Plain	RC	12
	AN320-3	Nut—Aircraft shear	RC	7
13	1-16381	Link Assembly—Spoiler	RC	1
14	AN23-16	Bolt—Clevis	RC	1
	AN960-10	Washer—Plain	RC	1
	AN320-3	Nut—Aircraft shear	RC	1
15	BAC1603-14	Spacer	RC	1
	15-6620-61	Installation—Top gun fairing window	All	NP
	15-6620-62	Window Assembly	WB	1
16	15-6620-3	Window—Plexiglass	WB	1
17	15-6620-12	Angle—Forward	WB	1
18	15-6620-67	Tube	WB	1
19	AN3-5A	Bolt—Aircraft	WB	4
	AN365-1032	Nut—Self-locking	WB	8
20	15-6620-79	Angle—Aft	WB	1
21	15-6620-66	Tube	WB	1
22	AN530-10R12	Screw—Sheet metal round head	WB	18
	1779M1	Speednut (Tinnerman)	WB	18
23	BAC1908-63AL	Washer—Plain	WB	18
24	1-26434-1	Washer—Everseal	WB	40
25	AN530-10R10	Screw—Sheet metal round head	WB	42
	1779M1	Speednut (Tinnerman)	WB	42
26	15-6620-2	Frame Assembly	WB	1
27	BAC1605-56	Spacer	WB	4
28	AN365-524	Nut—Self-locking	WB	4
29	AN960D16	Washer—Plain	WD	12
30	AN315-5R	Nut—Aircraft plain	WD	4
31	1-27378	Bolt—Special	WD	4
32	3-19290	Handle—Top window	WD	2
	3-19290-1	Handle—Top window	WD	2
33	AN320-5	Nut—Aircraft shear	WB	4
	15-6620-88	Window Assembly	PN	1
	15-6620-105	Window Assembly	MQ	1
34	6-18990	Deflector (used on 15-6620-88)	All	1
35	AN530-10RS	Screw—Sheet metal round head (used on 15-6620-88)	QN	5
36	15-6620-12	Angle—Forward	QN	1
37	15-6620-67	Tube	QN	1
38	AN3-5A	Bolt—Aircraft	QN	2
	AN365-1032	Nut—Self-locking	QN	4
39	AN530-10R12	Screw—Sheet metal round head	QN	9
	1779M1	Speednut (Tinnerman) (used on 15-6620-88)	QN	58
40	BAC1908-63AL	Washer—Plain	QN	9
41	AN530-10R10	Screw—Sheet metal round head	QN	44
42	1-26434-1	Washer—Everseal	QN	20
43	15-6620-2	Frame Assembly	QN	1
44	BAC1605-56	Spacer	QN	4
45	AN365-524	Nut—Self-locking	QN	4
46	AN960-D16	Washer—Plain	QN	12
47	AN315-5R	Nut—Aircraft plain	QN	4
48	1-27378	Bolt—Special	QN	4
49	3-19290-1	Handle—Top window	QN	2
	3-19290	Handle—Top window	QN	2
50	AN320-5	Nut—Aircraft shear	QN	4
	15-6620-97	Window Assembly	PN	1
	15-6620-104	Window Assembly	MQ	1
51	15-6620-89	Window—Plexiglass	PN	1
52	15-6620-103	Window—Plexiglass	MQ	1
53	15-6620-90	Strip—Plexiglass	PN	1
54	15-6620-91	Door—Plexiglass	QN	1
55	15-6620-95	Hinge	QN	1
56	AN530-6R6	Screw—Sheet metal round head	QN	6
57	AN526-1032R28	Screw—Truss head	QN	1
	AN365-1032	Nut—Self-locking	QN	1
58	NAS75-3-028	Bushing—Plain steel	QN	1
59	3-29904	Handle—Access door	QN	1
60	AN960-10	Washer—Plain	QN	2
61	3-29906	Strap Assembly—Access door	QN	1
62	AN526-832R18	Screw—Truss head	QN	2
	AN365-832	Nut—Self-locking	QN	2
63	15-6620-94	Spacer	QN	1
64	3-29905	Spring—Access door	QN	1

PUBLISHED BY AVIALOGS.COM

FUSELAGE

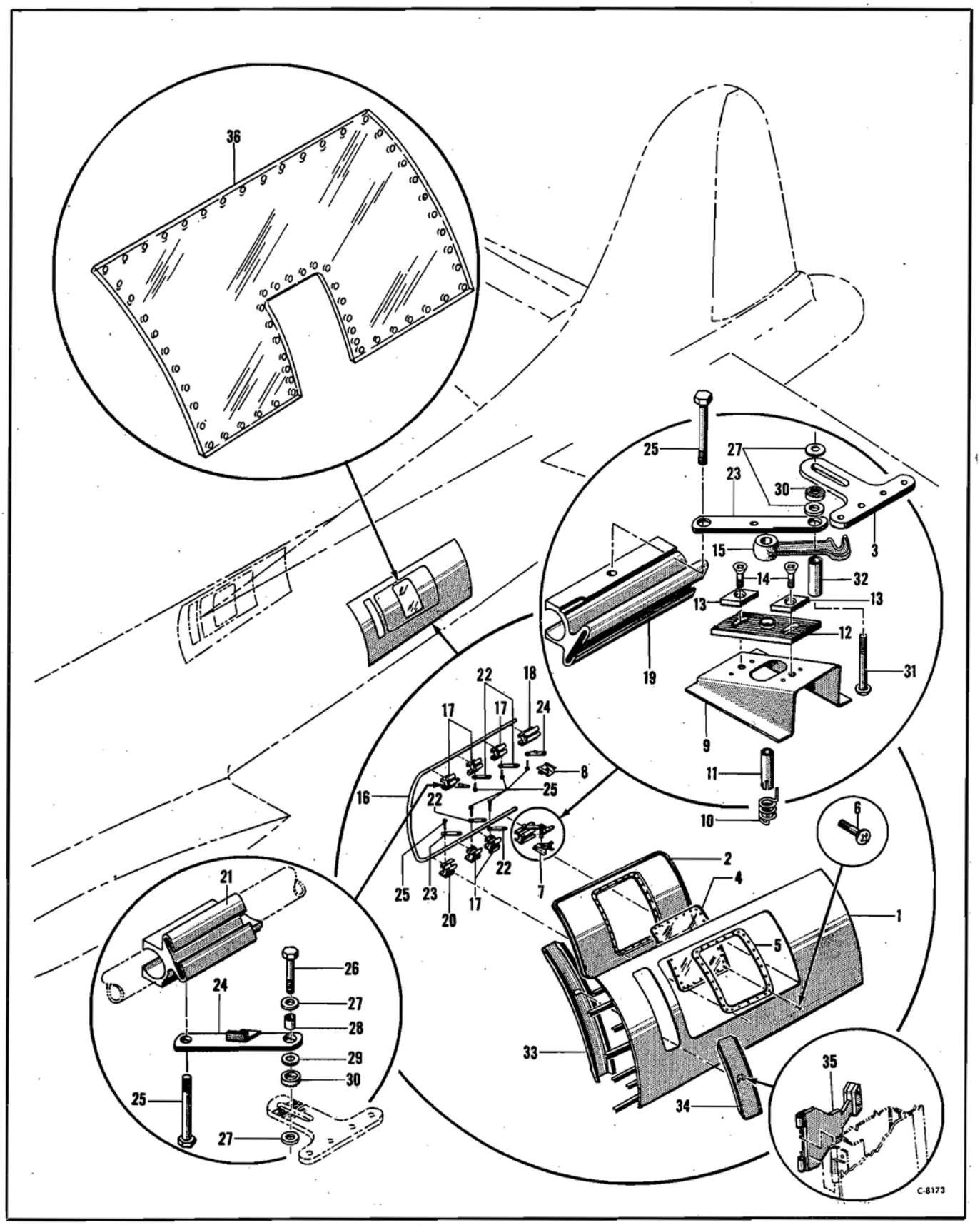

Figure 77—Waist Gun Windows

PUBLISHED BY AVIALOGS.COM

FUSELAGE

Waist Gun Windows

Figure & Index No.	Part Number	1 2 3 4 5 6 7 Nomenclature	Usage Code	Units Per Assy.
		Waist Gun Windows		
	65-7331	Fuselage Assembly—Rear section (see fig. 79)	OA	Ref
	65-7331-2	Fuselage Assembly—Rear section (see fig. 79)	KJ	Ref
	15-7374	Installation—Side gun window panel (LH)	OA	NP
	15-7374-1	Installation—Side gun window panel (RH)	OA	NP
77-1	15-7374-2	Panel Assembly (LH)	T	1
	15-7374-3	Panel Assembly (RH)	T	1
	15-7374-58	Panel Assembly (LH)	NG	1
	15-7374-59	Panel Assembly (RH)	NG	1
	15-7573	Window Assembly—Side gun (LH)	T	1
	15-7573-1	Window Assembly—Side gun (RH)	T	1
2	15-7573-2	Panel Assembly (LH)	T	1
	15-7573-3	Panel Assembly (RH)	T	1
3	1-28841	Plate—Waist gunners window	T	8
4	15-7573-8	Window	T	1
5	15-7573-10	Retainer	T	1
6	AN530-10R10	Screw—Sheet metal round head	T	28
7	6-9265-3	Hook Assembly—Side gun window (LH)	T	1
	6-9265-2	Hook Assembly—Side gun window (RH)	T	1
8	6-9265	Hook Assembly—Side gun window (LH)	T	1
	6-9265-1	Hook Assembly—Side gun window (RH)	T	1
9	1-18385	Bracket Assembly—Side window (on 6-9265 and -1)	T	1
	1-18401	Bracket Assembly—Side window (on 6-9265-3 and -2)	T	1
10	1-18560	Spring—Side gun window (LH)	T	1
	1-18560-1	Spring—Side gun window (RH)	T	1
11	6-9265-4	Shaft	T	1
12	1-18393	Plate Assembly	T	1
13	1-18457-1	Washer—Side window	T	2
14	AN510-10-10	Screw—Flat head	T	2
15	1-18379	Hook—Side window	T	1
	49-3685	Handle Assembly—Side gun window	T	1
16	49-3685-400	Tube	T	1
17	9-3685-2	Slider	T	4
18	9-3685-3	Slider	T	1
19	9-3685-4	Slider	T	1
20	9-3685-5	Slider	T	1
21	9-3685-6	Slider	T	1
22	1-24613-4	Link—Side gun window	T	4
23	1-18913-5	Link Assembly—Side window (lower)	T	2
24	1-18913-6	Link Assembly—Side window (upper)	T	2
25	AN4-20A	Bolt—Aircraft	T	8
	940-416	Washer—Burr	T	24
26	AN4-10A	Bolt—Aircraft	T	6
	AN365-428	Nut—Self-locking	T	8
27	940-416	Washer—Burr	T	14
28	BAC326-17S	Bushing	T	6
29	AN960D416L	Washer—Plain	T	8
30	1-18380-8-250	Washer—Special	T	8
31	BAC1470-428-28S	Screw—Button head	T	2
32	BAC326-64S	Bushing	T	2
	15-7044	Installation—Side window spoiler (LH)	OA	NP
	15-7044-1	Installation—Side window spoiler (RH)	OA	NP
	15-7044-15	Spoiler Assembly (LH)	OA	1
	15-7044-16	Spoiler Assembly (RH)	OA	1
33	15-7044-8	Frame Assembly (LH)	OA	1
	15-7044-9	Frame Assembly (RH)	OA	1
34	15-7044-17	Door Assembly	OA	1
35	1-18498	Lever Assembly—Spoiler	OA	1
	15-11639	Installation—Waist gun window LH	All	NP
	15-11645	Installation—Waist gun window RH	All	NP
36	15-11640-2	Window—Waist LH	All	1
	15-11644-2	Window—Waist RH	All	1

PUBLISHED BY AVIALOGS.COM

FUSELAGE

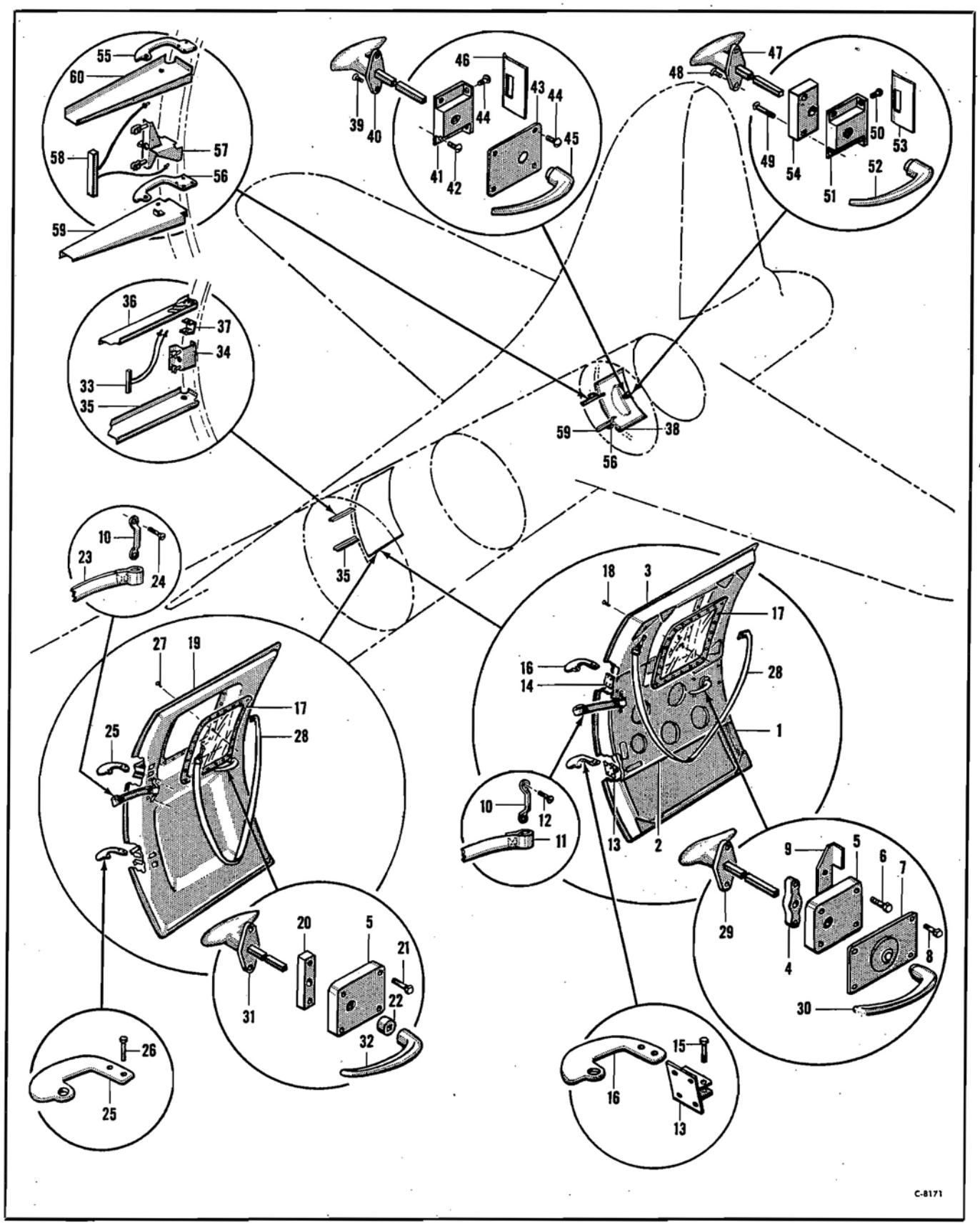

Figure 78—Main Entrance and Emergency Exit Doors and Releases

PUBLISHED BY AVIALOGS.COM

FUSELAGE

Main Entrance and Emergency Exit Doors and Releases

Figure & Index No.	Part Number	1 2 3 4 5 6 7 Nomenclature	Usage Code	Units Per Assy.
		Main Entrance and Emergency Exit Doors and Releases		
	65-7331	Fuselage Assembly—Rear section (see fig. 79)	OA	Ref
	65-7331-2	Fuselage Assembly—Rear section (see fig. 79)	KJ	Ref
	55-7606	Installation—Main entrance door	All	NP
	55-7606-400	Door Assembly	EC	1
	55-7606-416	Door Assembly	PO	1
	55-7606-414	Door Assembly	All	1
78-1	15-7606-1	Frame Assembly	V	1
2	15-7606-24	Panel	V	1
3	15-7606-26	Skin	V	1
4	1-18521	Spacer—Cast	V	1
5	54-1A	Latch (Rite Hardware)	All	1
6	AN3A11	Bolt—Aircraft	V	4
	AN960A10L	Washer—Plain	V	24
	AN960A616L	Washer—Plain	V	4
7	3-16120	Plate Assembly—Escutcheon	V	1
	1-18862	Escutcheon	V	1
8	NAS221-8	Bolt—Shear close tolerance	V	12
9	1-22603	Angle Assembly—Latch attaching	V	1
10	6403D	Loop—Footman (Eberhard)	All	1
11	1-27639	Strap—Door stop	V	1
12	AN510-10R6	Screw—Flat head	V	2
13	1-18683	Fitting—Door hinge (bottom)	V	1
14	1-18683-1	Fitting—Door hinge (top)	V	1
15	NAS53A10	Bolt—Close tolerance	V	4
16	1-18822	Hinge Assembly—Door	V	2
17	3-13721	Window—Main entrance door	All	1
18	AN530-10R8	Screw—Sheet metal round head	V	24
	AN960D10	Washer—Plain	V	24
19	55-7606-412	Door Assembly	PG	1
20	55-7606-415	Spacer	PG	1
21	NAS221-16	Bolt—Shear close tolerance	PG	4
22	55-7606-406	Spacer	PG	1
23	1-27639-1	Strap—Door stop	PG	1
24	AN531-10R8	Screw—Sheet metal flat head	PG	2
25	3-20750	Hinge Assembly—Door	PG	2
26	NAS53A7	Bolt—Close tolerance	PG	4
27	AN530-10R10	Screw—Sheet metal round head	PG	22
28	3-13737-4	Strap Assembly—Door	All	1
	070618	Snap	All	1
29	25-1G	Knob Assembly (Rite Hardware)	V	1
	25-1J	Knob Assembly (Rite Hardware)	LG	1
30	380B	Lever (Rite Hardware)	EC	1
31	25-1M	Knob Assembly (Rite Hardware)	PO	1
32	UB1	Handle Assembly (Rite Hardware)	PO	1
	15-7513	Installation—Main entrance door frame	OA	NP
	15-7513-47	Installation—Main entrance door frame	KJ	NP
	15-7513-1	Frame Assembly	OA	1
	15-7513-48	Frame Assembly	HJ	1
	15-7513-54	Frame Assembly	UP	1
33	1-18557-13	Handle Assembly—Emergency release	All	1
34	3-13628-2	Support Assembly—Door release	All	1
	46-9419-402	Installation—Door hinge support (bottom)	All	NP
	46-9419-403	Installation—Door hinge support (top)	All	NP
35	46-9419-400	Support Assembly (bottom)	All	1
	1-18842	Hinge Assembly—Main door	All	1
36	46-9419-401	Support Assembly (top)	All	1
	1-18842-1	Hinge Assembly—Main door	All	1
37	3-20828	Support Assembly—Door stop	All	1
	15-7595	Installation—Emergency exit door	All	NP
38	15-7595-1	Door Assembly	All	1
	3-13714	Installation—Emergency exit door latch	T	NP
39	AN510-10R10	Screw—Flat head	T	2
40	25-1F	Knob Assembly—Door (Rite Hardware)	T	1
41	53-1C	Latch Assembly—Exit door (Rite Hardware)	T	1
42	AN526-1032R8	Screw—Truss head	T	2
43	1-18789	Plate—Door	T	1
44	AN526-1032R7	Screw—Truss head	T	6
45	360B	Handle (Rite Hardware)	T	1
46	1-18863-1	Plate—Striker	T	1
	3-21872	Installation—Emergency exit door latch	NG	NP
47	25-1L	Knob Assembly—Door (Rite Hardware)	NG	1
48	AN531-10R10	Screw—Sheet metal flat head	NG	2
49	AN526-1032R16	Screw—Truss head	NG	2
50	AN526-1032R7	Screw—Truss head	NG	2
51	53-1C	Latch Assembly—Exit door (Rite Hardware)	NG	1
52	36CB	Handle (Rite Hardware)	NG	1
53	3-13714-1	Plate—Striker	NG	1
54	1-28999	Filler—Emergency door	NG	1
55	1-18661-4	Hinge Assembly—Emergency exit door (top)	All	1
56	1-18661-3	Hinge Assembly—Emergency exit door (bottom)	All	1
	15-7514	Installation—Emergency exit frame	All	NP
	15-7514-1	Frame Assembly	All	1
	3-13665	Installation—Release handle support	EA	NP
57	3-13665-1	Bracket Assembly	EA	1
58	1-18557-1	Handle Assembly—Door release	All	1
59	15-7514-47	Channel Assembly—Lower	All	1
60	15-7514-48	Channel Assembly—Upper	All	1
	BAC340-4-197	Bushing	All	1

PUBLISHED BY AVIALOGS.COM

FUSELAGE

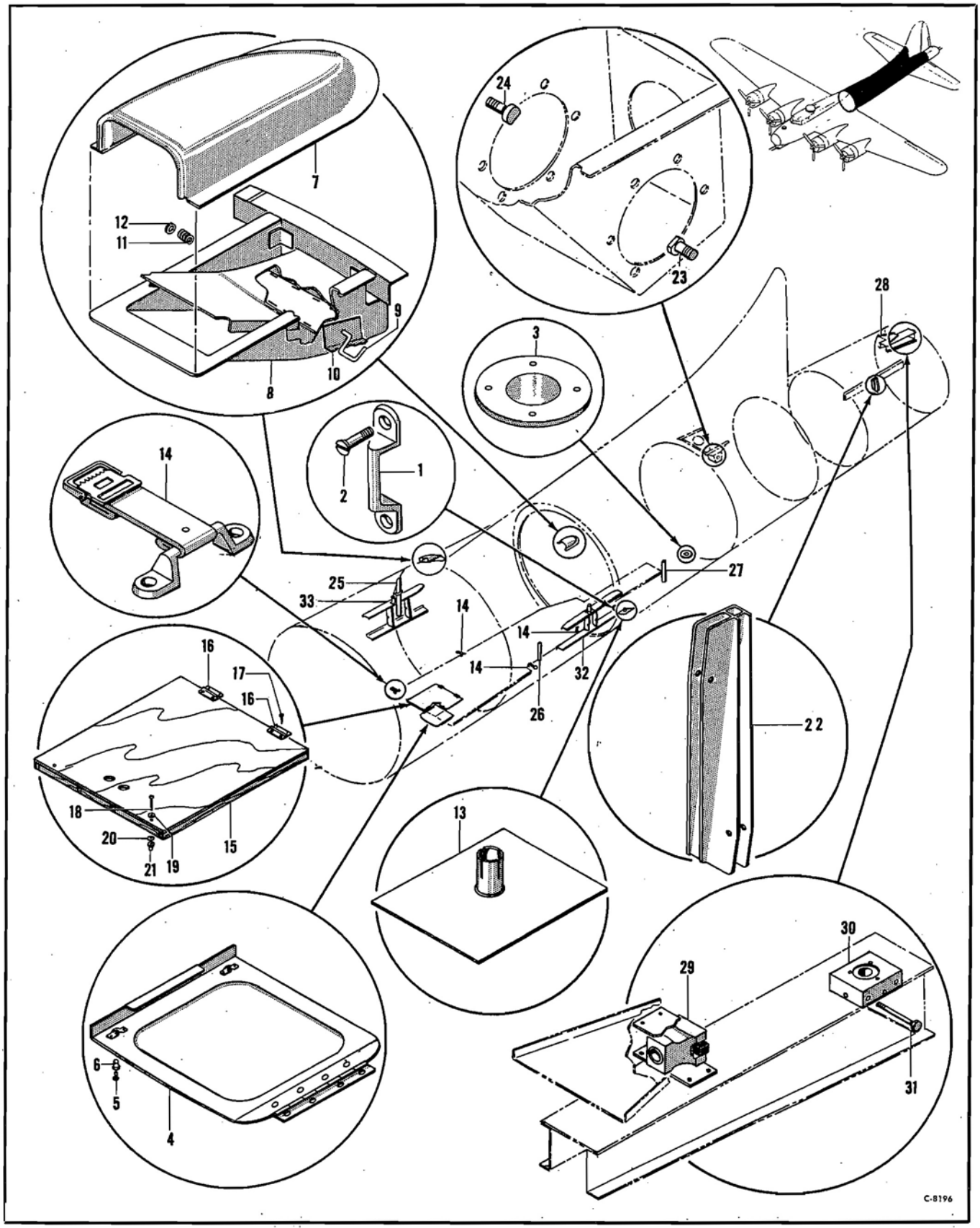

Figure 79—Rear Section Miscellaneous Fittings

PUBLISHED BY AVIALOGS.COM

FUSELAGE

Rear Section Miscellaneous Fittings

Figure & Index No.	Part Number	1 2 3 4 5 6 7 Nomenclature	Usage Code	Units Per Assy.
		Rear Section Miscellaneous Fittings		
	65-7331	Fuselage Assembly—Rear section	OA	1
	65-7331-2	Fuselage Assembly—Rear section	KJ	1
	12-825	Installation—Stiffener station 6H circumference	KJ	NP
	12-825-11	Segment Assembly	All	1
79-1	6411B	Loop—Footman (Eberhard)	RK	1
2	AN510-10R8	Screw—Flat head	All	2
	AN365-1032	Nut—Self-locking	All	2
	3-13552	Installation—Jacking cone	All	NP
3	3-13541	Cone—Jacking	All	1
	55-7612	Installation—Skin station 6-11	All	NP
	15-10431	Installation—Lower turret clean off door	All	NP
4	15-10431-1	Door Assembly	All	1
5	AN526-632R4	Screw—Truss head	All	2
6	P101	Stud (Tinnerman)	All	2
	15-15392	Installation—Defroster intake (LH)	OL	NP
	15-15396	Installation—Defroster intake (RH)	OL	NP
7	6-13419	Scoop Assembly—Air	OL	1
8	9-8083	Control Assembly—Defroster (LH)	OL	1
	9-8083-1	Control Assembly—Defroster (RH)	OL	1
9	6-18386	Damper Assembly—Defroster	OL	1
10	3-27923	Stop—Ratchet	OL	1
11	1-24263	Spring	OL	1
12	AN960-10L	Washer—Plain	OL	2
	9-5621	Installation—Auxiliary power plant patch	EA	NP
13	6-13393	Patch Assembly—Auxiliary power plant	EA	1
	15-13043	Installation—Waist gunners floor	All	NP
14	3-27013	Strap Assembly—Web	All	4
	6411B	Loop—Footman (Eberhard)	All	1
	132	Buckle (Waterbury Buckle Co.)	All	1
15	8-2805	Door Assembly—Station 6C-6D	All	1
16	AN251-2-2	Hinge—Continuous	All	2
17	AN550-10R7	Screw—Flat head wood	All	4
18	AN505-6-18	Screw—Flat head	All	2
19	BAC1907-2	Washer—82 degree countersunk	All	2
20	AN960D6	Washer—Plain	All	2
21	P101	Stud (Tinnerman)	All	2
	15-7633	Installation—Elevator beam hinge support	All	NP
	6-9340	Installation—Elevator tab bracket	All	NP
	6-9340-2	Bracket Assembly	All	1
22	6-9340-9	Bracket	All	1
	55-7621	Installation—Tail gear motor bracket	All	NP
	55-7621-423	Bracket Assembly	All	1
	55-7621-424	Plate Assembly—LH	All	1
23	1-30418	Bolt—Projection welding	All	6
	55-7621-425	Plate Assembly—RH	All	1
24	1-30418-1	Bolt—Projection welding	All	5
	9-5053	Installation—Radio antenna mast	All	NP
25	9-5053-1	Mast Assembly	All	1
	6-10137	Installation—Marker antenna mast (station 5G)	All	NP
26	6-10137-1	Mast Assembly	All	1
	9-3660	Installation—Marker antenna mast (station 6G)	All	NP
27	9-3660-1	Mast Assembly	All	1
	15-7536	Installation—Rudder hinge	All	NP
28	15-7536-1	Beam Assembly	All	1
29	3-13625	Support Assembly—Rudder lock plunger	All	1
	1-18563	Block—Rudder stop	All	2
	1-24204-1	Bushing	All	1
30	3-13575	Bearing Assembly—Rudder hinge	All	1
	AN200K8	Bearing—Heavy duty	All	1
31	NAS53A27-5	Bolt—Close tolerance	All	2
	AN960-10	Washer—Plain	All	2
	AN365-1032	Nut—Self-locking	All	2
	12-1199	Installation—Waist gun mount LH	WQ	NP
	15-11912	Installation—Waist gun mount support LH	JJ	NP
32	12-1199-1	Mount Assembly (see fig. 150)	WQ	1
	9-6481-2	Support Assembly—Gun mount LH (see fig. 150)	JJ	1
	12-1198	Installation—Waist gun mount RH	WQ	NP
	15-11900	Installation—Waist gun mount support RH	JJ	NP
33	12-1198-1	Mount Assembly (see fig. 150)	WQ	1
	9-6482-2	Support Assembly—Gun mount RH (see fig. 150)	JJ	1

PUBLISHED BY AVIALOGS.COM

FUSELAGE

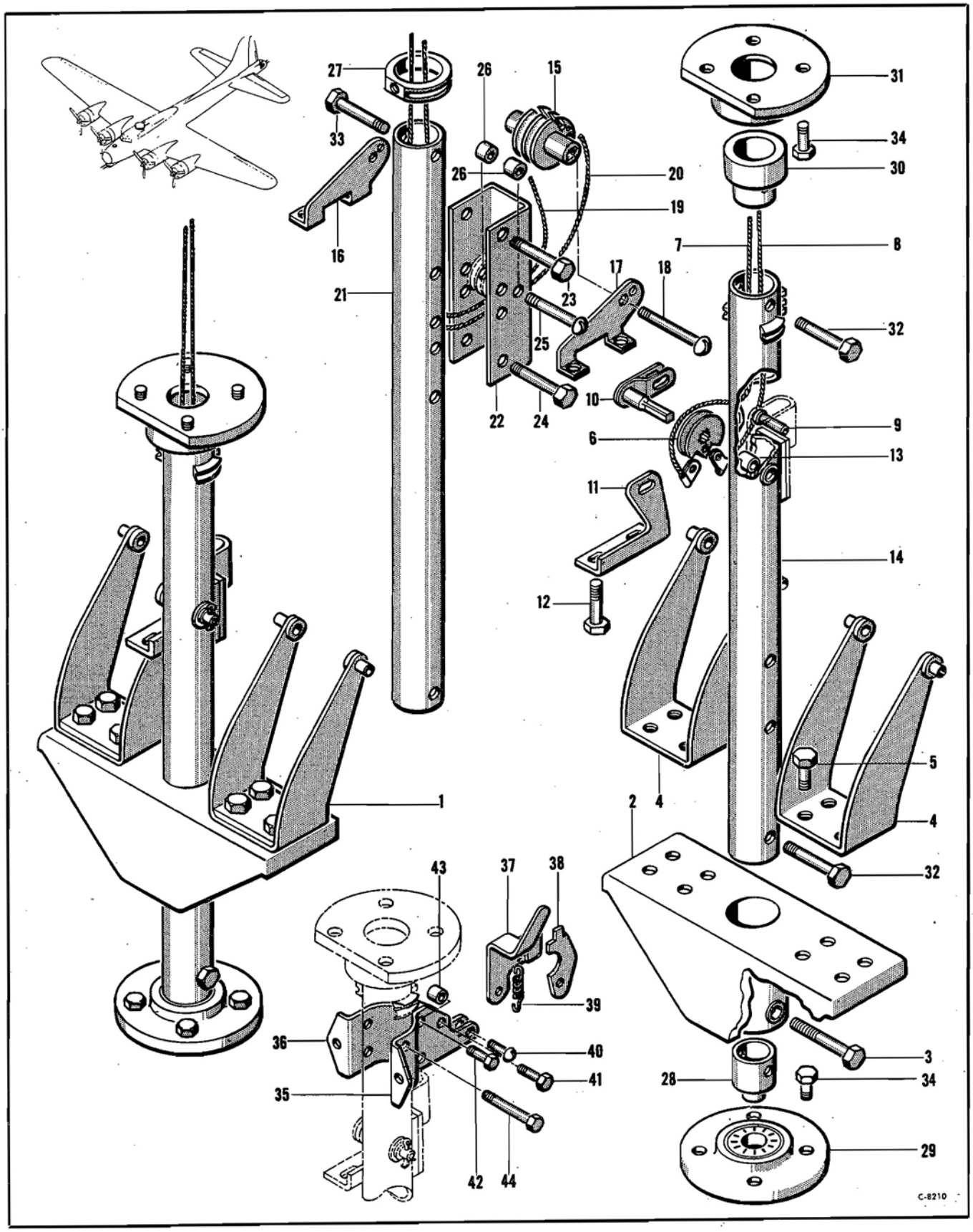

Figure 80—Rear Gun Mount and Tow Target Release

PUBLISHED BY AVIALOGS.COM

FUSELAGE

Rear Gun Mount and Tow Target Release

Figure & Index No.	Part Number	1 2 3 4 5 6 7 Nomenclature	Usage Code	Units Per Assy.
		Rear Gun Mount and Tow Target Release		
80-1	15-7518-1	Mount Assembly—Rear gun (see fig. 152)	PB	Ref
2	6-9280	Support—Gun mount	PB	1
3	NAS55S25-5A	Bolt—Close tolerance	PB	2
	AN365-524	Nut—Self-locking	PB	2
4	3-13527	Yoke Assembly—Gun mount	PB	2
5	AN5-10A	Bolt—Aircraft	PB	8
	15-7518-4	Pulley Assembly	B	1
6	1-18304	Pulley—Sight control	B	1
7	BAC1804-21-3R	Cable Assembly—Control	B	1
8	BAC1804-16-6R	Cable Assembly—Control	B	1
9	AN393-19	Pin—Flat head	B	1
	AN960-10L	Washer—Plain	B	1
10	1-19661	Crank Assembly—Rear gun sight	B	1
11	1-19658	Bracket—Rear gun sight	B	1
12	AN4-16	Bolt—Aircraft	B	2
13	1-29690	Spacer—Pulley	B	1
	3-13531-7	Tube Assembly—Rear gun support	B	1
14	3-13531-5	Tube Assembly—Weld	B	1
15	3-20466	Sheave—Rear gun sight	YD	1
16	3-20464	Bracket—Rear gun sight	YD	1
17	3-20464-1	Bracket—Rear gun sight	YD	1
18	AN515-8R10	Screw—Round head	YD	4
19	BAC1824-206-248	Cable Assembly—Control	YD	1
20	BAC1824-206-203	Cable Assembly—Control	YD	1
	6-14027-2	Tube Assembly—Rear gun support	YD	1
21	6-14027-1	Tube	YD	1
22	3-20468	Channel	YD	1
23	NAS54A22	Bolt—Close tolerance	YD	1
	AN364-428	Nut—Thin self-locking	YD	1
24	1-28979-1	Bolt—Special	YD	3
	AN316-4R	Nut—Aircraft check	YD	3
25	1-28977-1	Bolt—Special	YD	1
26	BAC1603-32	Spacer	YD	2
	AN315-3R	Nut—Aircraft plain	YD	1
27	3-20476	Sheave—Gun mount upper	YD	1
28	1-18256	Terminal—Rear gun support	PB	1
29	3-13514	Support Assembly—Rear gun mount	PB	1
30	1-18262	Terminal—Rear gun support	PB	1
31	3-13507	Support Assembly—Rear gun mount	PB	1
32	AN4-21A	Bolt—Aircraft	PB	2
	AN365-428	Nut—Self-locking	PB	2
33	AN4-6A	Bolt—Aircraft	YD	2
34	AN3-6A	Bolt—Aircraft	PB	8
	55-7311	Installation—Equipment	All	NP
	9-5314	Installation—Tow target release	PB	NP
	9-5314-1	Release Assembly	PB	1
35	3-18266	Support—Tow target release	PB	1
36	3-18266-1	Support—Tow target release	PB	1
37	3-18269	Lever Assembly—Tow target release	PB	1
38	1-26471	Yoke—Tow target release	PB	1
39	36A2108	Spring	PB	1
40	AN23-12	Bolt—Clevis	PB	1
	AN310-3	Nut—Aircraft castle	PB	1
41	AN4-6A	Bolt—Aircraft	PB	1
	AN310-4	Nut—Aircraft castle	PB	1
42	AN3-6A	Bolt—Aircraft	PB	2
43	BAC1603-14	Spacer	PB	2
	AN365-1032	Nut—Self-locking	PB	2
44	AN3-21A	Bolt—Aircraft	PB	2
	AN365-1032	Nut—Self-locking	PB	2

PUBLISHED BY AVIALOGS.COM

FUSELAGE

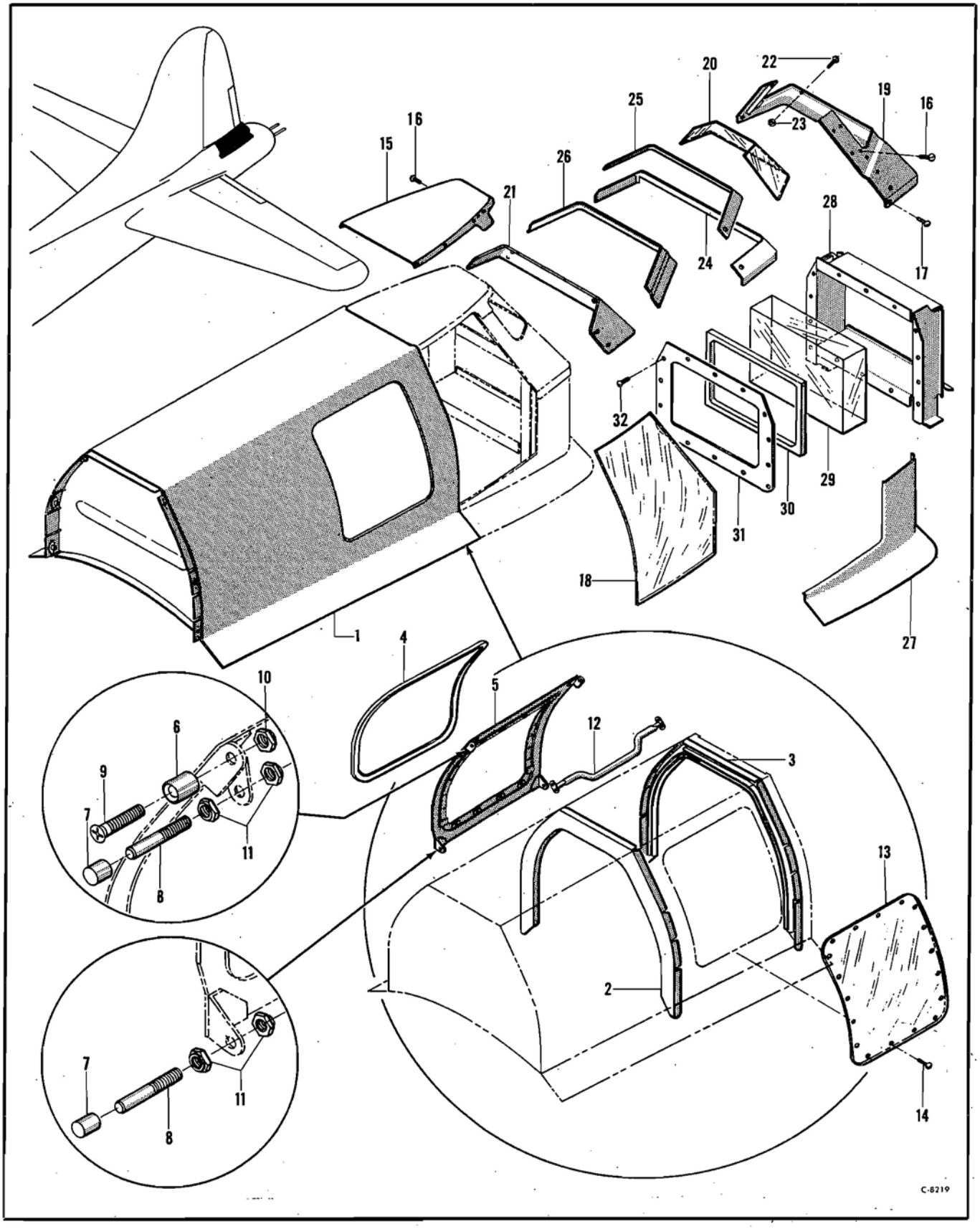

Figure 81—Tail Gunner's Window Enclosure

PUBLISHED BY AVIALOGS.COM

FUSELAGE

Tail Gunners Window Enclosure

Figure & Index No.	Part Number	1 2 3 4 5 6 7 Nomenclature	Usage Code	Units Per Assy.
		Tail Gunners Window Enclosure		
	55-7377	Fuselage Assembly (see fig. 71)	All	Ref
	15-7360-83	Enclosure Assembly—Rear gun	PB	1
	15-7360-90	Enclosure Assembly—Rear gun	KM	1
	15-7360-1	Shell Assembly—Upper	PB	1
	15-7360-91	Shell Assembly—Upper	KM	1
81-1	15-13288	Shell Assembly—Head fairing	QH	1
	14-3316	Shell—Head fairing	NE	1
	9-3442	Shell—Head fairing	E	1
	15-8778	Installation—Rear gunners window	All	NP
2	15-8775	Channel Assembly—Head fairing	EA	1
3	15-8774	Channel Assembly—Head fairing	EA	1
4	15-8778-5	Seal—Rubber	Q	1
	15-8778-10	Seal—Rubber	YE	1
5	15-8779	Panel Assembly—Pick up window	All	1
6	1-20367	Spacer—Special	All	2
7	M361	Bearing—Needle (Torrington)	All	4
8	1-20365	Stud—10-32 special	All	4
9	AN505-6R14	Screw—Flat head	All	2
10	AN365-632	Nut—Self-locking	All	2
11	AN364-1032	Nut—Self-locking	All	8
12	3-14987	Handle Assembly—Pick up window	All	1
13	9-6115	Panel—Pick up window	All	1
14	AN520-10R4	Screw—Round head	All	18
	AN960D10L	Washer—Plain	All	18
	48463	Fastener (United Carr)	All	18
15	6-14538	Strip—Rubber retainer window	ZE	1
	3-13657	Strip—Rubber retainer window	E	1
16	AN526-1032R10	Screw—Truss head	All	30
	AN526-1032R5	Screw—Truss head	All	8
17	AN526-1032R10	Screw—Truss head	All	4
	AN365-1032	Nut—Self-locking	All	4
18	15-7572	Panel—Pick up window	All	1
19	46-9339	Frame Assembly—Window rubber retainer	All	1
20	6-9332	Panel—Pick up window	All	1
21	3-13534	Plate—Rear gunner armor	PB	1
22	AN526-1032R16	Screw—Truss head	PB	6
	BAC1554-51-33	Washer—Rubber	PB	6
23	AN365-1032	Nut—Self-locking	PB	8
24	3-13600-1	Gasket—Rubber	PB	1
25	15-7360-11	Strip—Rubber	PB	1
26	6-9468	Strip—Window rubber retainer	All	1
27	6-9268	Fairing—Window frame	All	1
28	9-7321	Mount Assembly—Protective glass	All	1
29	1-17551	Window—Gunners bullet proof glass	All	1
30	1-18815	Gasket—Rubber	All	1
31	6-8979	Retainer—Protective glass	All	1
32	AN526-1032R10	Screw—Truss head	All	7
	AN526-1032R14	Screw—Truss head	All	4
	AN510-10R10	Screw—Flat head	All	3

PUBLISHED BY AVIALOGS.COM

FUSELAGE

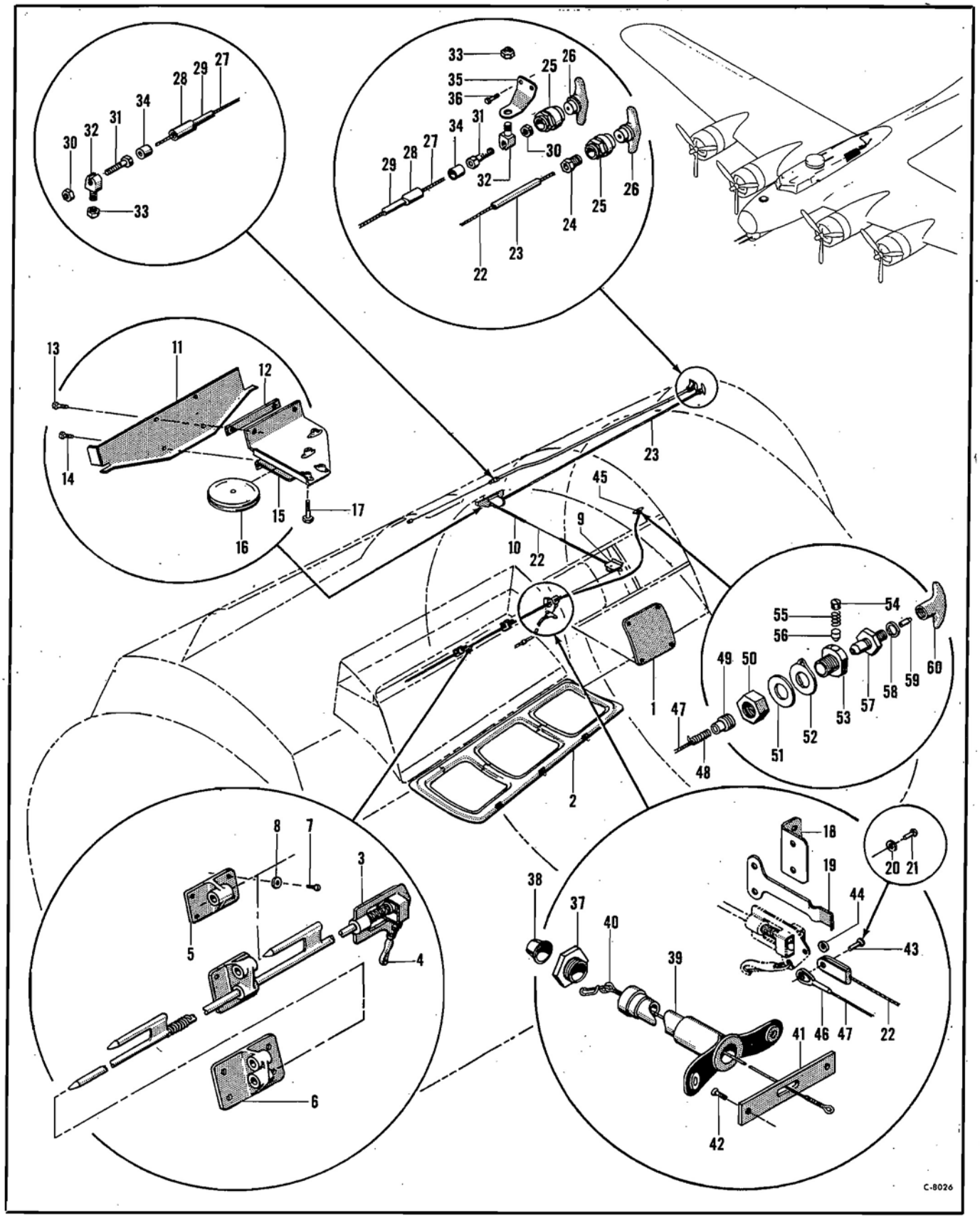

Figure 82—Life Raft Doors and Raft Automatic Ejector

PUBLISHED BY AVIALOGS.COM

FUSELAGE

Life Raft Doors and Raft Automatic Ejector

Figure & Index No.	Part Number	1 2 3 4 5 6 7 Nomenclature	Usage Code	Units Per Assy.
		Life Raft Doors and Raft Automatic Ejector		
	15-9759	Installation—Life raft fairing (see fig. 65)	FB	NP
	15-9759-150	Installation—Life raft fairing (see fig. 65)	NL	NP
	15-9759-43	Fairing Assembly	FB	1
	15-9759-149	Fairing Assembly	NL	1
	14-1695	Installation—Inspection door (LH)	All	NP
	14-1695-1	Installation—Inspection door (RH)	All	NP
82-1	14-1695-4	Door Assembly (LH)	EA	1
	14-1695-41	Door Assembly (LH)	QH	1
	14-1695-5	Door Assembly (RH)	EA	1
	14-1695-42	Door Assembly (RH)	QH	1
2	15-9759-8	Door Assembly (LH)	All	1
	15-9759-9	Door Assembly (RH)	All	1
3	43-10760-408	Latch Assembly—Raft door (LH)	All	1
	43-10760-409	Latch Assembly—Raft door (RH)	All	1
4	070618	Snap	All	1
	15-9759-2	Channel Assembly—LH door latch	All	1
	15-9759-3	Channel Assembly—RH door latch	All	1
5	1-24977	Guide—Door latch	All	1
6	1-24981	Guide—Door latch	All	1
7	AN520-10R12	Screw—Round head	All	10
	AN365-1032	Nut—Self-locking	All	10
8	AN960D10	Washer—Plain	All	10
	54-1696	Installation—Inspection door support (LH)	FB	NP
9	43-11181	Bracket Assembly—Pulley LH	FB	1
	AN3-6A	Bolt—Aircraft	FB	1
	AN210-2A	Pulley—Anti-friction bearing control	FB	1
10	65-5783-606	Tube	All	1
	49-2914	Installation—Pulley bracket RH	All	NP
11	49-2914-401	Plate	All	1
12	49-2914-5	Spacer	All	1
13	AN520-10-10	Screw—Round head	All	2
14	AN520-10-7	Screw—Round head	All	2
15	49-2914-400	Bracket Assembly	All	1
16	AN210-2A	Pulley—Anti-friction bearing control	All	1
17	AN3-6A	Bolt—Aircraft	All	1
	55-7311	Installation—Equipment	All	NP
	64-1698	Installation—Life raft automatic ejector	All	NP
18	64-1698-3	Angle	All	1
19	41-8180	Spring—Latch (LH)	All	1
	41-8180-1	Spring—Latch (RH)	All	1
20	AN960-10L	Washer—Plain	QB	4
21	AN393-11	Pin—Flat head	QB	2
22	64-1698-500	Cable Assembly—LH	All	1
23	64-1698-504	Tube	All	1
24	810B4D	Fitting—Solderless double	All	1
25	8805	Socket Assembly—Mounting (Walter Kidde Co.)	All	2
26	41-7703	Handle—T pull	All	2
27	64-1698-501	Cable Assembly—RH	All	1
28	64-1694-506	Casing—Control cable	All	1
29	64-1694-505	Tube	All	1
30	AN316-4R	Nut—Aircraft check	All	2
31	AN8005-1	Stop—Control cable flexible casing	All	2
32	038244	Post—Control cable flexible casing	All	2
33	AN365-428	Nut—Self-locking	All	2
34	AN8004-1	Cap—Flexible push-pull control casing	All	2
35	1-18566	Bracket—Bowdenite support	All	1
36	AN3-4A	Bolt—Aircraft	All	2
37	1-29232	Coupling—Conduit	All	2
38	1-26276-1	Ferrule—Rigid conduit	All	2
39	3-16979	Guide Assembly—Cable	All	2
40	1-24228-2	Cable Assembly—Life raft	All	2
41	41-9046-1	Fairlead—Life raft control	All	2
42	AN505-6R10	Screw—Flat head	All	4
	15-15489	Installation—Life raft control	XM	NP
43	AN393-17	Pin—Flat head	XM	2
44	AN960-10L	Washer—Plain	XM	6
45	3A385	Control Assembly (Shakespeare Products Co.)	XM	2
46	6M345	Clevis	XM	1
47	9900	Cable	XM	1
48	3700	Tubing—Wire	XM	1
49	6M343	Adapter	XM	1
50	1054	Nut—Plain	XM	1
51	1264	Washer—Internal shakeproof	XM	1
52	1485	Washer	XM	1
53	3F142	Plate—Face	XM	1
54	10G116	Screw—Set	XM	1
55	985	Spring—Locking pawl	XM	1
56	6M377	Pawl	XM	1
57	6M342	Insert—Plunger	XM	1
58	1248	Washer	XM	1
59	6M344	Fitting—Wire	XM	1
60	2K148	Handle—T	XM	1

PUBLISHED BY AVIALOGS.COM

FUSELAGE

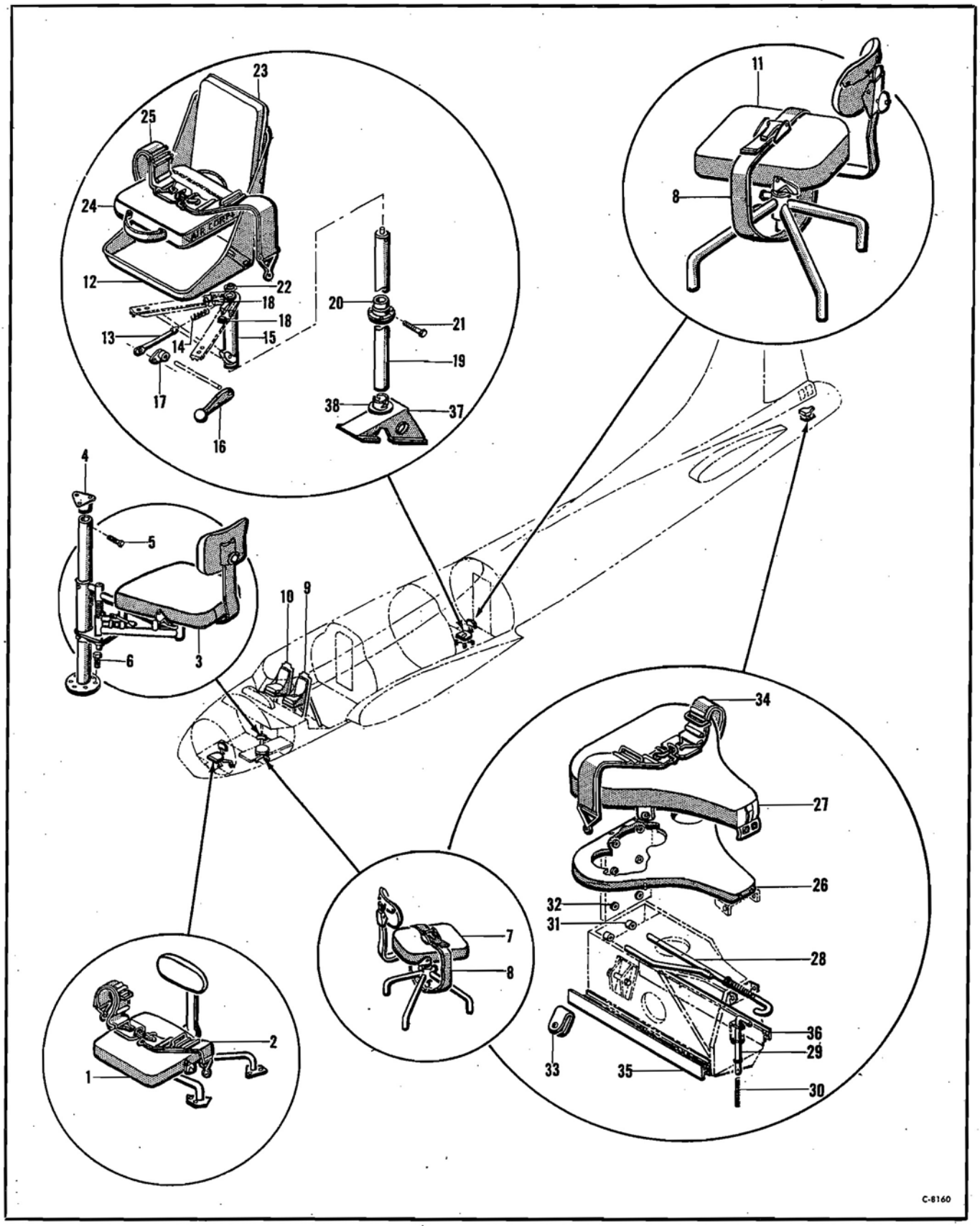

Figure 83—Seats Index

PUBLISHED BY AVIALOGS.COM

FUSELAGE

Seats Index

Figure & Index No.	Part Number	1 2 3 4 5 6 7 Nomenclature	Usage Code	Units Per Assy.
		Seats Index		
	6-14508	Installation—Bombers seat	All	NP
83-1	14-3626	Seat Assembly—Bombardiers	All	1
2	34G1646	Belt Assembly (Type B-11) GFE	All	1
	14-3311	Installation—Navigators seat	F	NP
	15-15398	Installation—Navigators seat	HM	NP
3	10-2142	Seat Assembly—Navigators (Cramer Posture Chair Co.)	ND	1
4	3-20238	Fitting—Navigators seat	F	1
5	AN3-17A	Bolt—Aircraft	F	1
6	AN5-10A	Bolt—Aircraft	ND	6
7	1-18332	Chair—Navigators	WK	1
8	1-18411	Strap Assembly—Chair	All	2
9	47-1501	Installation—Pilots and co-pilots seat (LH) (see fig. 84)	All	NP
10	47-1501-1	Installation—Pilots and co-pilots seat (RH) (see fig. 84)	All	NP
11	1-18332	Chair—Radio operators	AB	1
	7-1503	Installation—Radio operators seat	AL	NP
	75-4133	Seat Assembly—Radio operators	AL	1
12	65-5280-506	Seat Assembly	AL	1
13	61-9846	Plunger—Seat adjusting	AL	1
14	41-293	Spring—Compression	AL	1
15	56-5141	Shaft Assembly—Radio operators seat	AL	1
	56-5141-6	Bearing—Oilite	AL	1
	41-9961	Cap Assembly—Seat shaft	AL	1
	AN200K6	Bearing—Heavy duty	AL	1
16	81-4547	Handle—Seat adjusting	All	1
17	41-5899	Bell Crank—Crew seat	AL	1
18	1-18050-12	Spacer	AL	2
19	3-8010-12	Post Assembly—Radio operators seat	AL	1
	1-18399	Cap—Crew seat post	AL	1
20	21-9759	Collar—Radio operators seat	AL	1
21	NAS54A26	Bolt—Close tolerance	AL	1
22	41-9963-1	Washer—Concave	AL	1
23	AN7501	Cushion—Aircraft type A-3	AL	1
24	074272	Cushion (Type A-1)	AL	1
25	34G1646	Belt Assembly (Type B-11) GFE	AL	1
	15-7337	Installation—Rear gunner seat	All	NP
	15-7337-44	Seat Assembly	All	1
	15-7337-43	Support Assembly—Adjusting	All	1
26	15-7337-31	Seat	All	1
27	6-8943	Cushion Assembly—Rear gunner	All	1
28	3-19026	Fork Assembly—Seat lock	All	1
	1-18073	Spring—Compression	All	1
29	1-26887	Tube—Seat lock	All	1
30	1-18073	Spring—Compression	All	1
	15-7337-42	Support Assembly	All	1
31	1-27630	Bushing—Seat lock guide	All	2
32	1-26889	Bushing—Seat lock guide	All	6
33	1-18778	Strap Assembly—Rear gunners seat	All	2
34	34G1646	Belt Assembly (Type B-11) GFE	All	1
35	3-13733	Track Assembly—Rear gunners seat (LH)	All	1
36	3-13733-1	Track Assembly—Rear gunners seat (RH)	All	1
	1-18071	Plate	All	1
	55-7330	Fuselage Assembly—Forward section (see fig. 71)	All	Ref
	9-3092	Installation—Radio operators seat support	AL	NP
37	9-3092-8	Support Assembly	AL	1
	6-8247-1	Support—Radio compartment seat	AL	1
38	41-314	Support—Radio operators seat	AL	1

PUBLISHED BY AVIALOGS.COM

FUSELAGE

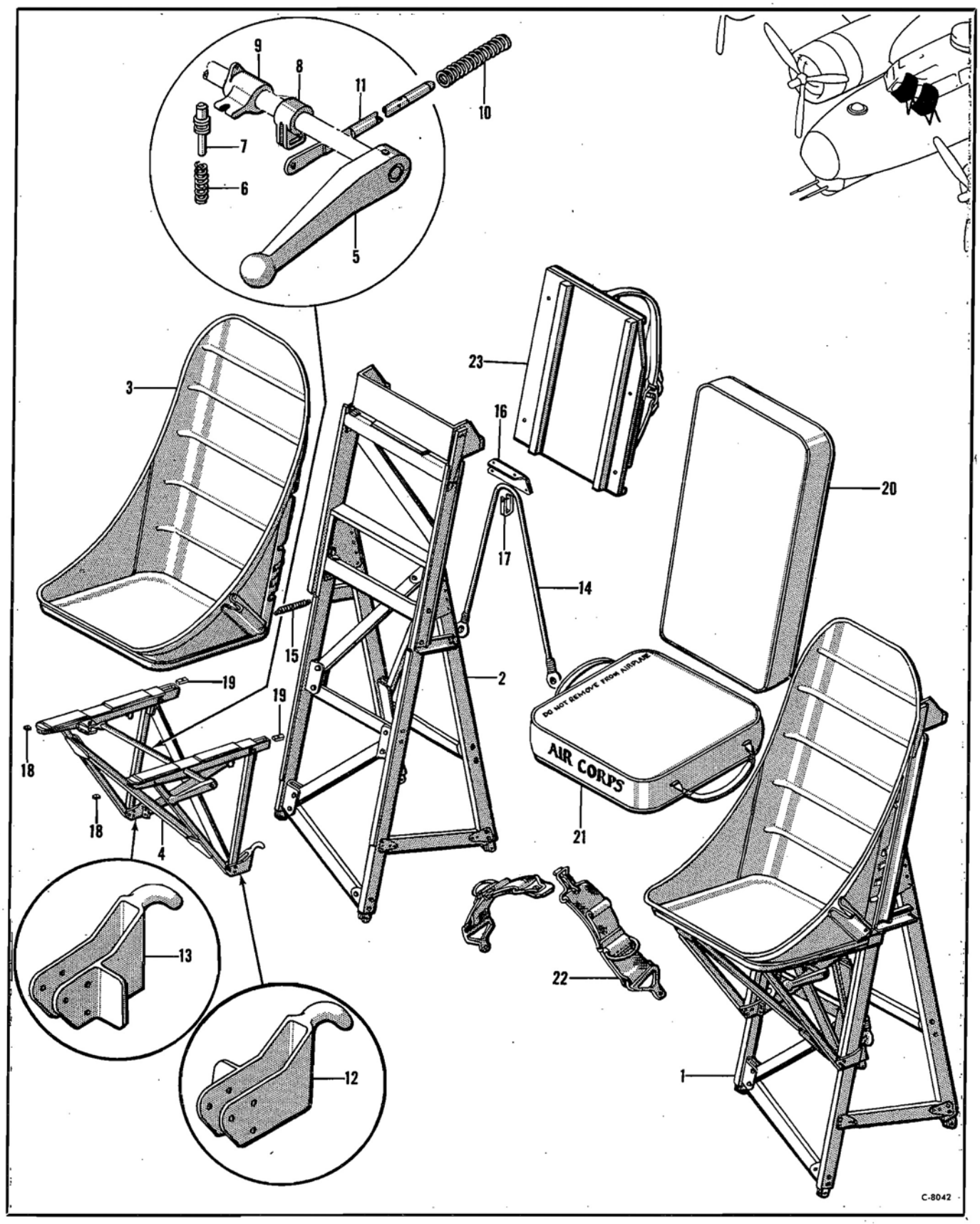

Figure 84—Pilot's and Co-pilot's Seats

PUBLISHED BY AVIALOGS.COM

FUSELAGE

Pilots and Co-pilots Seat

Figure & Index No.	Part Number	1 2 3 4 5 6 7 Nomenclature	Usage Code	Units Per Assy.
		Pilots and Co-pilots Seat		
	47-1501	Installation—Pilots and co-pilots seat (LH) (see fig. 83)	All	NP
	47-1501-1	Installation—Pilots and co-pilots seat (RH) (see fig. 83)	All	NP
84-1	47-1501-405	Seat Assembly (LH)	VC	1
	47-1501-407	Seat Assembly (LH)	AQ	1
	47-1501-406	Seat Assembly (RH)	VC	1
	47-1501-408	Seat Assembly (RH)	AQ	1
2	75-4093-612	Mount Assembly—Pilots seat support (LH)	VC	1
	75-4093-619	Mount Assembly—Pilots seat support (LH)	AQ	1
	75-4093-614	Mount Assembly—Pilots seat support (RH)	VC	1
	75-4093-618	Mount Assembly—Pilots seat support (RH)	AQ	1
3	75-3448	Seat Assembly—Pilots	All	1
4	55-5272-407	Support Assembly—Pilots seat (LH)	All	1
	55-5272-408	Support Assembly—Pilots seat (RH)	All	1
5	81-4547	Handle	All	1
	55-5272-16	Tube	All	1
6	21-5963	Spring	All	2
7	21-5960	Plunger	All	2
8	51-19	Arm	All	2
9	61-5642	Arm (LH)	All	1
	61-5642-1	Arm (RH)	All	1
10	41-778	Spring—Compression	All	2
11	21-5641	Plunger Assembly	All	2
12	41-9902	Fitting—Pilots seat	All	1
13	41-9902-1	Fitting—Pilots seat	All	1
14	21-9370	Cord Assembly—Pilots seat shock	All	1
15	41-5647	Spring—Horizontal seat adjustment	All	2
16	3-21428	Bracket—Pilots seat (LH)	SC	1
	3-13598	Bracket—Co-pilots seat (RH)	All	1
17	21-9352	Fitting—Pilots seat support	All	1
18	61-7431	Stop—Front	All	2
19	61-7431-1	Stop—Rear	All	2
20	AN7501	Cushion—Aircraft type A-3	All	1
21	074272	Cushion—Life preserver (type A-1)	All	1
22	34G1646	Belt Assembly (type B-11) GFE	All	1
	9-7512	Installation—Parachute stowage	DH	NP
	9-7512-8	Installation—Parachute stowage	AQ	NP
23	9-7512-1	Panel Assembly	DH	1
	9-7512-5	Panel Assembly	AQ	1
	6-14277-6	Strap Assembly	All	1
	6-14277-5	Strap Assembly	All	1
	6403D	Loop—Footmans (Eberhard Mfg. Co.)	All	2

PUBLISHED BY AVIALOGS.COM

FUSELAGE

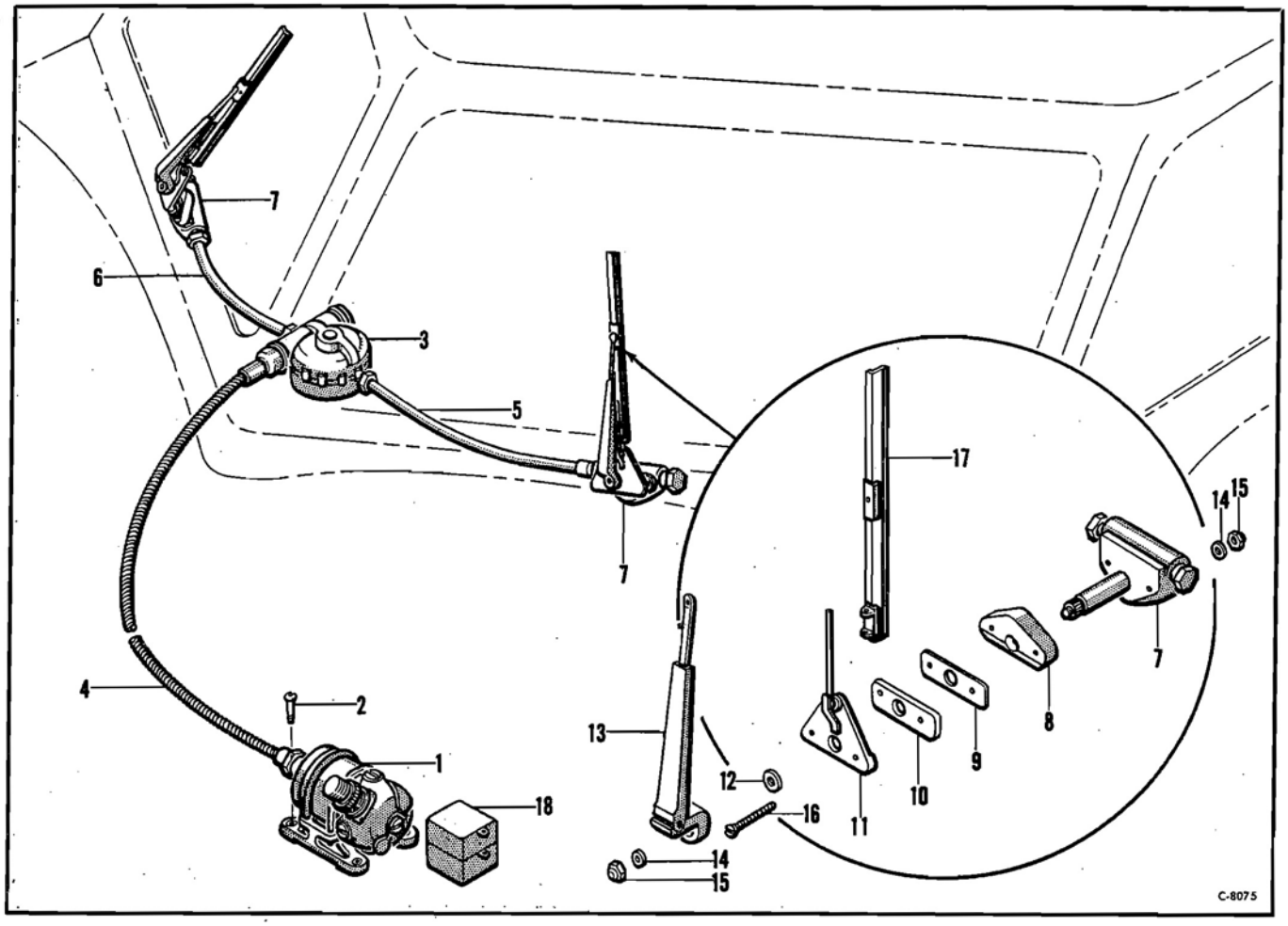

Figure 85—Windshield Wipers

Windshield Wipers

Figure & Index No.	Part Number	1 2 3 4 5 6 7 Nomenclature	Usage Code	Units Per Assy.
	15-9761	Installation—Windshield wipers	QD	NP
85-1	D12364	Motor Assembly—Electric wire (Marquette Metal Products)	QD	1
	1071535	Brush Assembly (Delco Products Corp.)	QD	2
	5343971	Screw—Brush inner (Delco Products Corp.)	QD	2
	5368691	Screw—Brush outer (Delco Products Corp.)	QD	2
	5368644	Armature Assembly (Delco Products Corp.)	QD	1
2	AN3-6A	Bolt—Aircraft	QD	4
	15-9761-1	Converter Assembly	B	1
	15-9761-14	Converter Assembly	CQ	1
3	D12184	Converter Assembly—Windshield wiper torque (Marquette Metal Prod.) (see fig. 86)	QD	1
	3-16934	Bracket—Converter support	QD	1
	6-19436	Bracket—Converter support	QD	1
4	A14765	Shaft Assembly—Flex drive (Marquette Metal Products)	QD	1
	15-9761-2	Unit Assembly—Wiper LH	B	1
	15-9761-12	Unit Assembly—Wiper LH	CQ	1
	15-9761-3	Unit Assembly—Wiper RH	B	1
	15-9761-13	Unit Assembly—Wiper RH	CQ	1
5	D14770	Control Assembly LH (Marquette Metal Products)	B	1
	D15897	Control Assembly LH (Marquette Metal Products)	CQ	1
6	D14776	Control Assembly RH (Marquette Metal Products)	B	1
	D15898	Control Assembly RH (Marquette Metal Products)	CQ	1
7	B14767	Unit Assembly—Wiper drive (Marquette Metal Products)	QD	1
8	3-16933-1	Filler—Wiper unit	QD	3
9	B50088	Gasket (Marquette Metal Products)	QD	2
10	A14771	Plate—Support (Marquette Metal Products)	B	2
	15-9761-15	Plate	CQ	2
11	A14773	Plate Assembly—Mounting (Marquette Metal Products)	B	2
	A16055	Plate Assembly—Mounting (Marquette Metal Products)	CQ	2
12	B16010	Seal (Marquette Metal Products)	QD	2
13	B14091	Arm Assembly—Wiper (Marquette Metal Products)	B	2
	B16054	Arm Assembly—Wiper (Marquette Metal Products)	CQ	2
14	AN960C10L	Washer—Plain	QD	2
15	AN368-1032	Nut—Self-locking	QD	6
16	AN510R44	Screw—Flat head	QD	4
17	B12180	Blade Assembly—Wiper (Marquette Metal Products)	QD	2
18	CA275X	Condenser (P. R. Mallory Co.)	QD	2

PUBLISHED BY AVIALOGS.COM

FUSELAGE

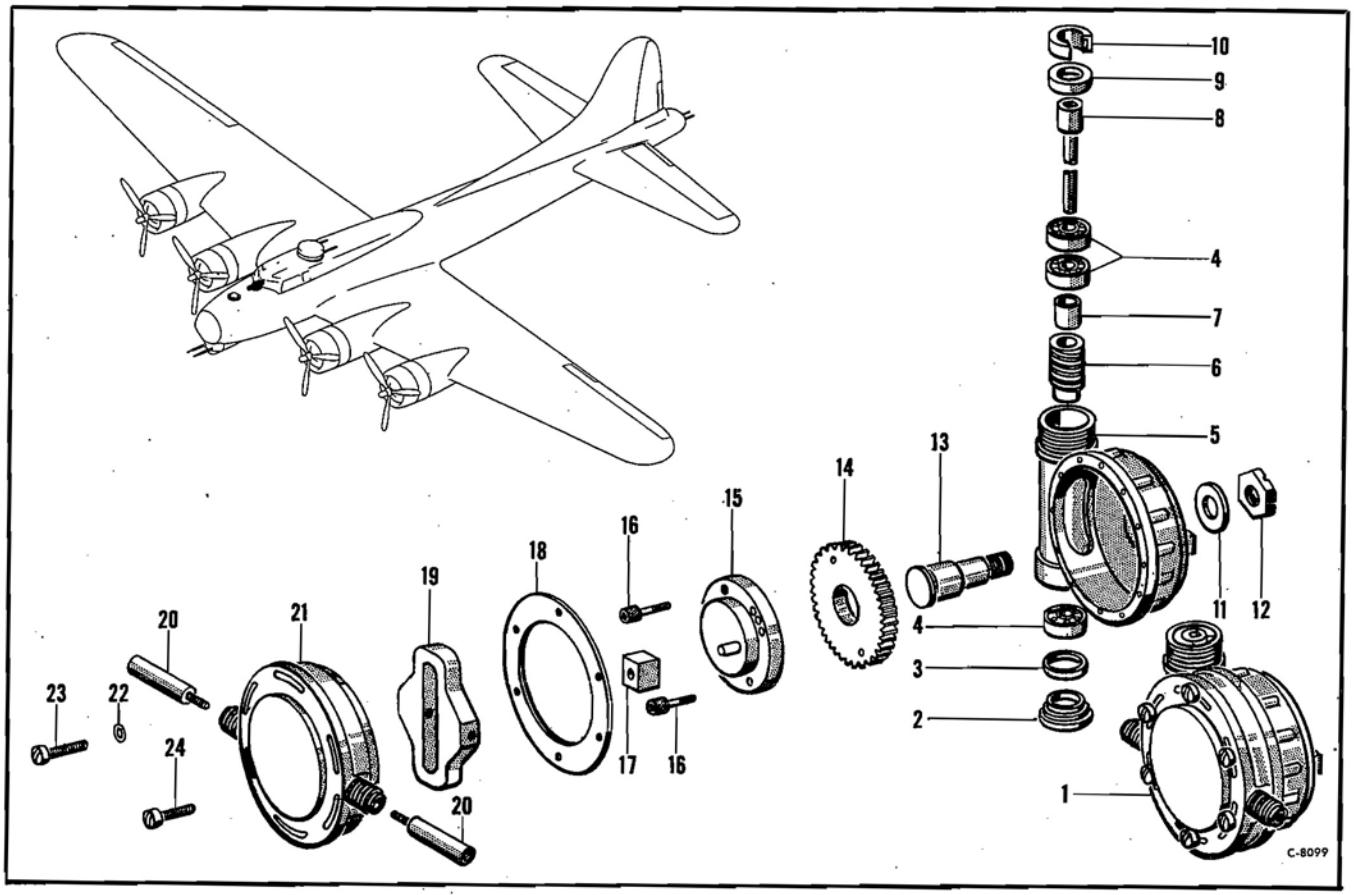

Figure 86—Windshield Wiper Converter

Windshield Wiper Converter

Figure & Index No.	*Part Number*	*1 2 3 4 5 6 7* *Nomenclature*	*Usage Code*	*Units Per Assy.*
		Windshield Wiper Converter		
86-1	D12184	Converter Assembly (Marquette Metal Products) (see fig. 85)	QD	Ref
2	A12835	Nut	QD	1
3	A12978	Gasket	QD	1
4	A14623	Bearing—Ball	QD	3
5	A13516	Housing Assembly	QD	1
	B15468	Scraper	QD	2
6	A15274	Worm	QD	1
	A15419	Pin—Worm drive	QD	1
7	A12493	Spacer	QD	1
8	B15418	Shaft—Drive	QD	1
9	A12494	Spacer	QD	1
10	A15112	Seal—Oil	QD	1
11	A13512	Washer	QD	1
12	AN320D4	Nut—Aircraft shear	QD	1
13	A13513	Stud	QD	1
14	B14555	Gear—Worm	QD	1
15	B12496	Plate—Adapter	QD	1
16	A14234	Screw—Cap	QD	2
17	A12204	Block—Bearing	QD	1
18	A12206	Gasket	QD	1
19	A12202	Yoke—Scotch	QD	1
20	A12203	Rod—Yoke	QD	2
21	D12201	Plate—Cover	QD	1
22	A12199	Washer	QD	6
23	A15502	Screw	QD	2
24	A14578	Screw	QD	4

RESTRICTED
PUBLISHED BY AVIALOGS.COM

FUSELAGE

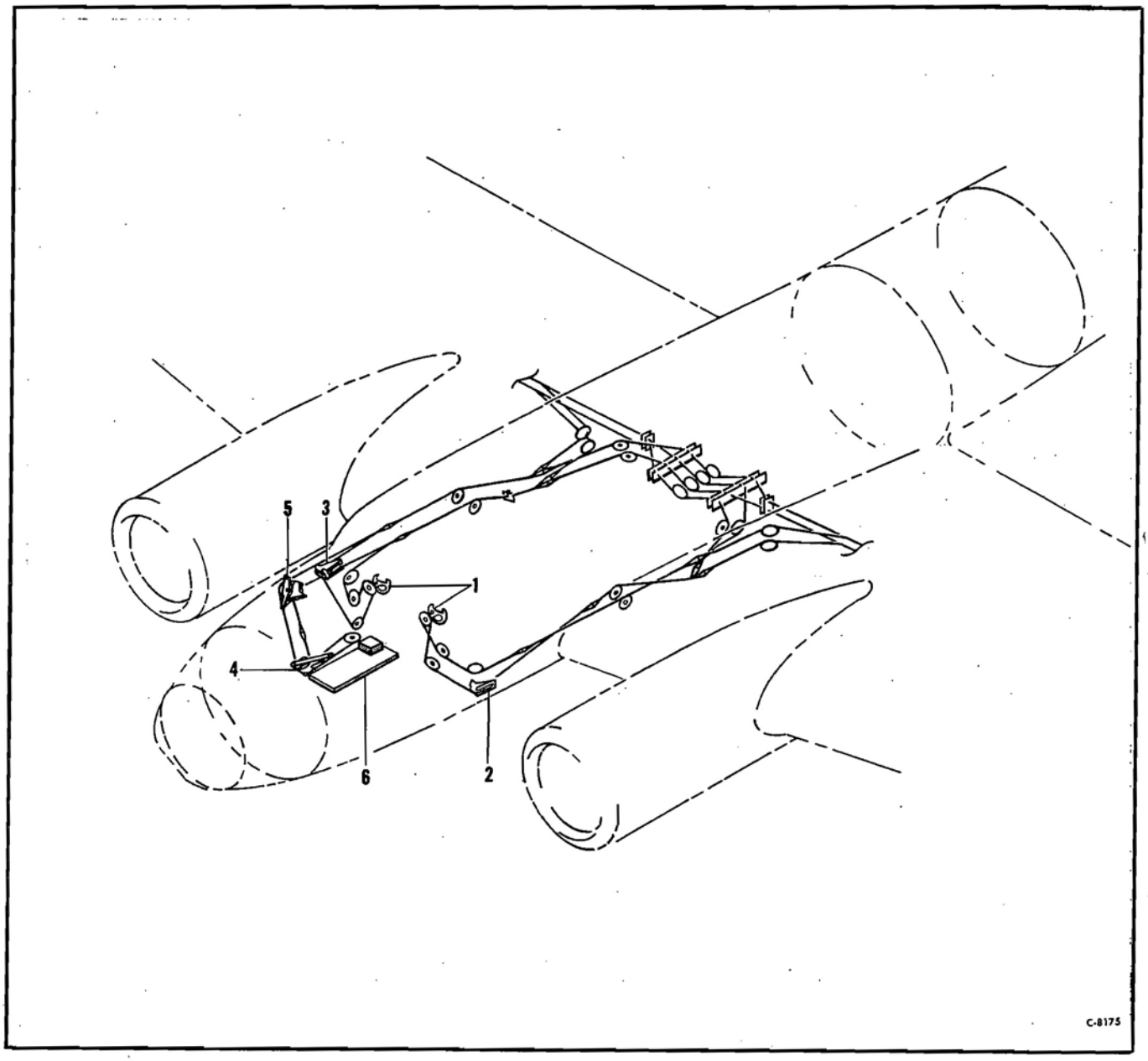

Figure 87—Aileron Controls

Aileron Controls

Figure & Index No.	*Part Number*	*1 2 3 4 5 6 7* *Nomenclature*	*Usage Code*	*Units Per Assy.*
		Aileron Controls		
	15-11162	Installation—Aileron control	All	NP
87-1	15-8538	Installation—Aileron and elevator control column (see fig. 91)	All	NP
2	15-10960-1	Bracket Assembly—Aileron control (LH) (see fig. 71)	All	Ref
3	15-10973-1	Bracket Assembly—Aileron control (RH) (see fig. 71)	All	Ref
4	9-5640-1	Bracket Assembly—Aileron servo (see fig. 68)	All	Ref
5	9-5642-1	Bracket Assembly—Aileron servo (see fig. 68)	All	Ref
6	3-15185	Installation—Aileron servo and converter unit (see fig. 98)	All	NP

PUBLISHED BY AVIALOGS.COM

FUSELAGE

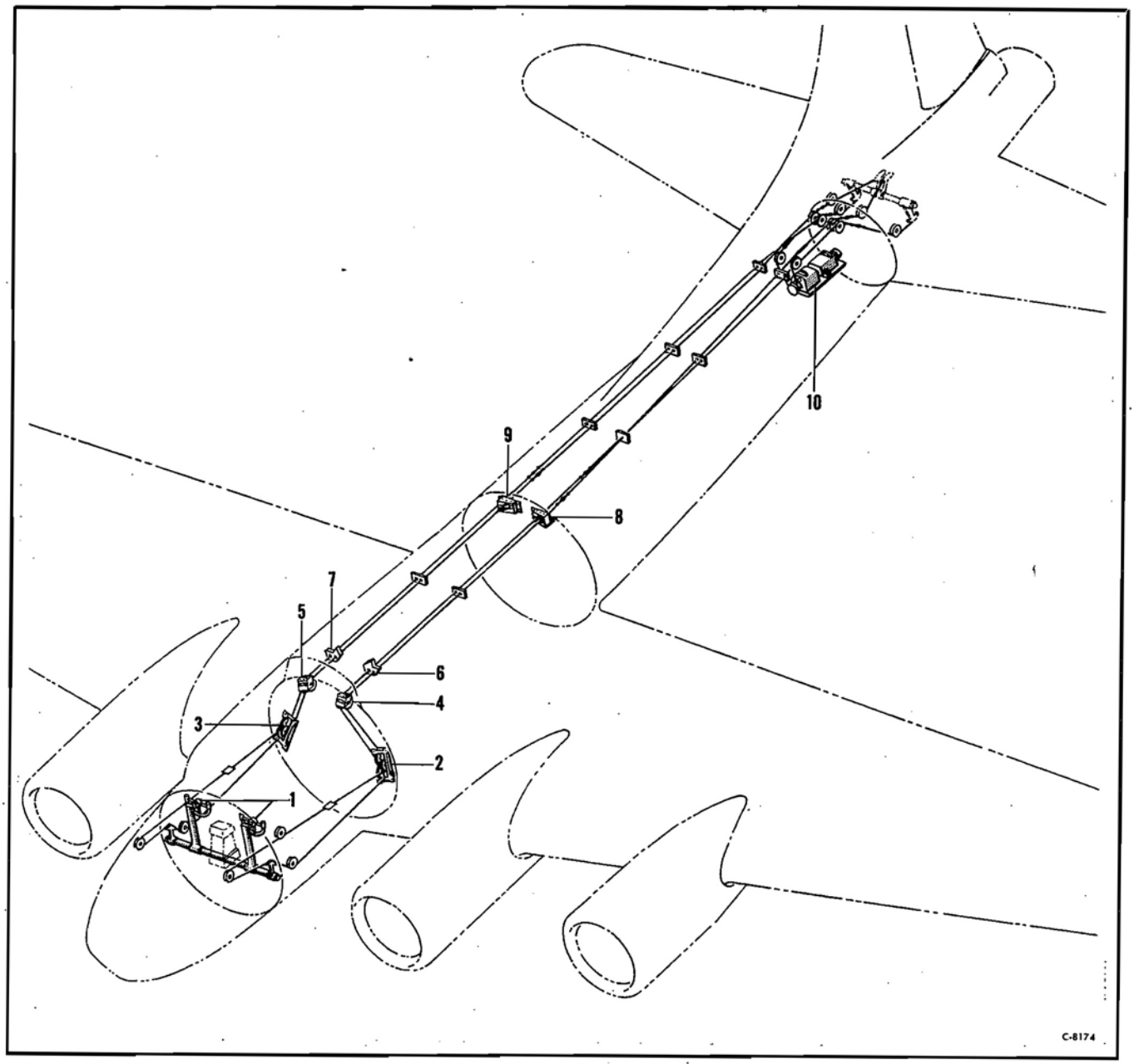

Figure 88—Elevator Controls

Elevator Controls

Figure & Index No.	Part Number	1 2 3 4 5 6 7 Nomenclature	Usage Code	Units Per Assy.
		Elevator Controls		
	55-7032	Installation—Elevator control	All	NP
88-1	15-8538	Installation—Aileron and elevator control col (see fig. 91)	All	NP
2	15-11921-2	Bracket Assembly—Elevator and rudder (LH) (see fig. 68)	KJ	Ref
3	15-11921-3	Bracket Assembly—Elevator and rudder (RH) (see fig. 68)	KJ	Ref
4	9-6611-2	Bracket Assembly—Elevator and rudder (LH) (see fig. 68)	KJ	Ref
5	9-6611-3	Bracket Assembly—Elevator and rudder (RH) (see fig. 68)	KJ	Ref
6	9-6608-2	Bracket Assembly—Elevator and rudder (LH) (see fig. 71)	KJ	Ref
7	9-6608-3	Bracket Assembly—Elevator and rudder (RH) (see fig. 71)	KJ	Ref
8	3-13454	Bracket—Control cable pulley (LH) (see fig. 71)	All	Ref
9	3-13454-1	Bracket—Control cable pulley (RH) (see fig. 71)	All	Ref
10	3-15184	Installation—Rudder and elevator servo unit (see fig. 98)	All	NP

PUBLISHED BY AVIALOGS.COM

FUSELAGE

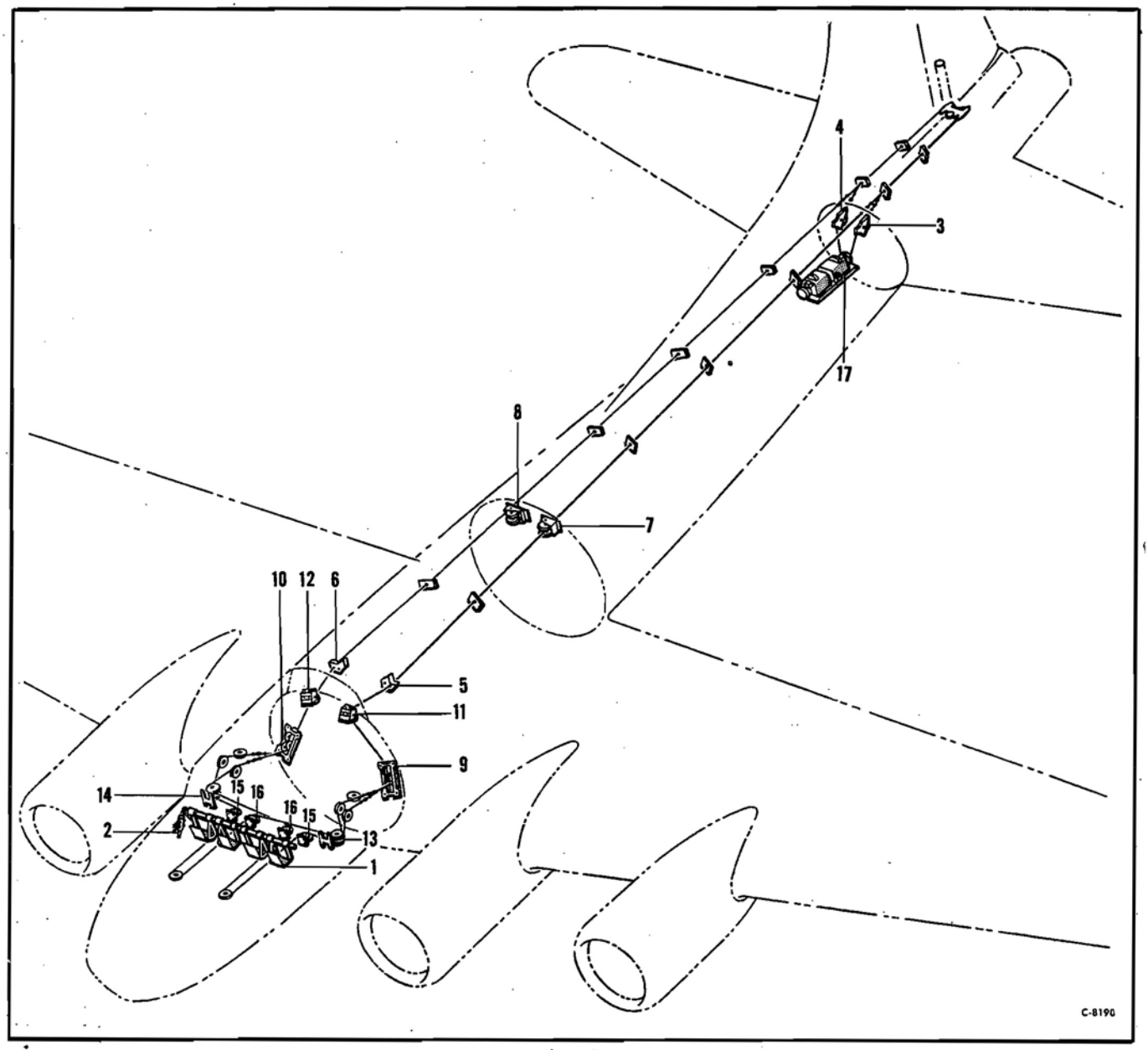

Figure 89—Rudder Controls

Rudder Controls

Figure & Index No.	*Part Number*	*1 2 3 4 5 6 7 Nomenclature*	*Usage Code*	*Units Per Assy.*
		Rudder Controls		
	55-7031	Installation—Rudder control	All	NP
89-1	75-3508	Installation—Rudder pedals (see fig. 92)	All	NP
2	64-1600	Installation—Brake control (see fig. 93)	All	NP
3	6-11307-17	Bracket Assembly—Rudder servo (LH) (see fig. 75)	All	Ref
4	6-11307-1	Bracket Assembly—Rudder servo (RH) (see fig. 75)	All	Ref
5	9-6608-2	Bracket Assembly (LH) (see fig. 71)	KJ	Ref
6	9-6608-3	Bracket Assembly (RH) (see fig. 71)	KJ	Ref
7	3-13454	Bracket—Pulley (LH) (see fig. 71)	All	Ref
8	3-13454-1	Bracket—Pulley (RH) (see fig. 71)	All	Ref
9	15-11921-2	Bracket Assembly—Elevator and rudder (LH) (see fig. 68)	KJ	Ref
10	15-11921-3	Bracket Assembly—Elevator and rudder (RH) (see fig. 68)	KJ	Ref
11	9-6611-2	Bracket Assembly—Elevator and rudder (LH) (see fig. 68)	KJ	Ref
12	9-6611-3	Bracket Assembly—Elevator and rudder (RH) (see fig. 68)	KJ	Ref
13	15-12784-1	Bracket Assembly—Rudder control (LH) (see fig. 66)	DK	Ref
14	15-12784-2	Bracket Assembly—Rudder control (RH) (see fig. 66)	DK	Ref
15	15-12784-3	Bracket Assembly—Rudder control (LH) (see fig. 66)	DK	Ref
16	15-12784-4	Bracket Assembly—Rudder control (RH) (see fig. 66)	DK	Ref
17	3-15184	Installation—Rudder and elevator servo unit (see fig. 98)	All	NP

PUBLISHED BY AVIALOGS.COM

FUSELAGE

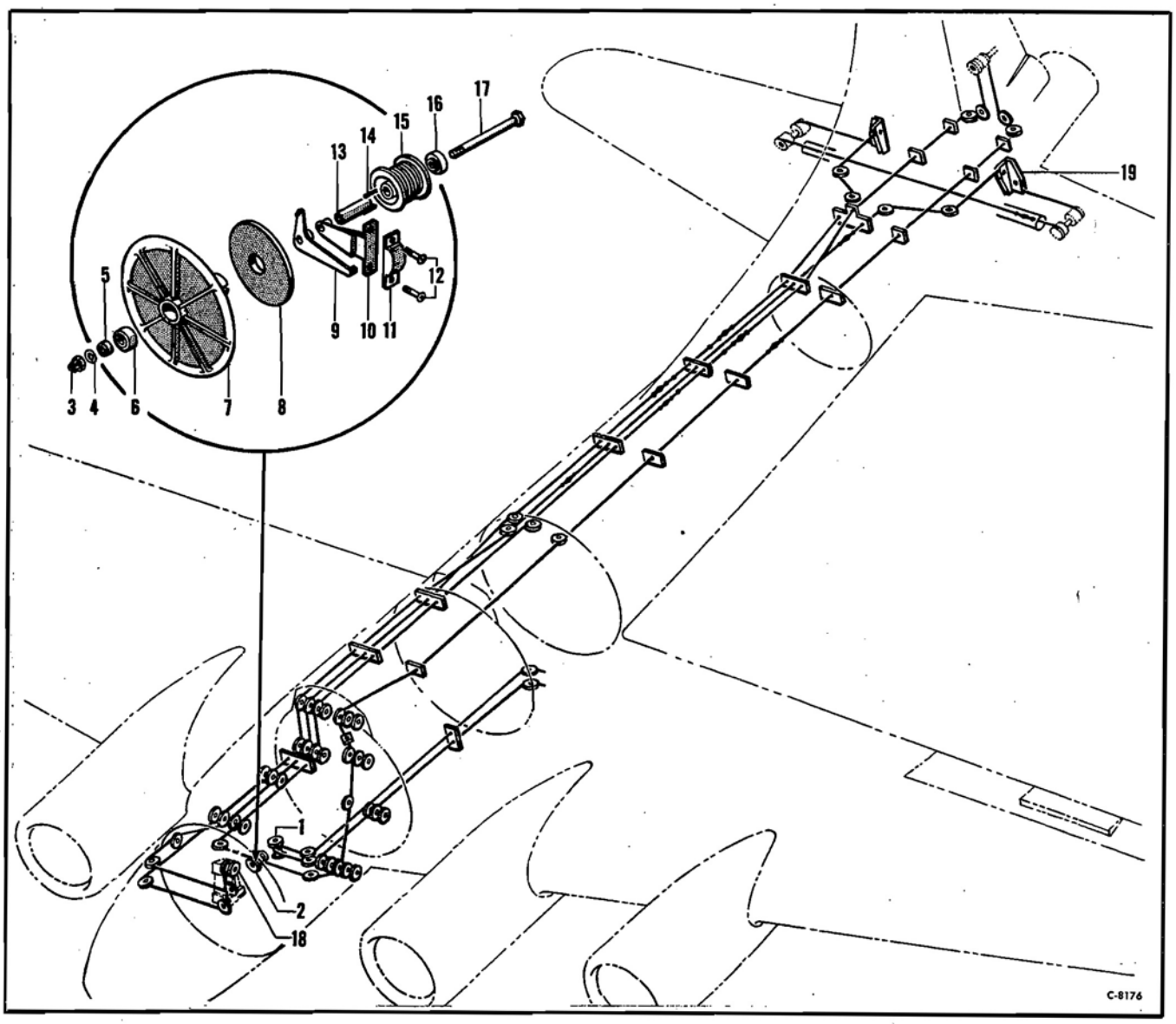

Figure 90—Tab Controls

Tab Controls

Figure & Index No.	Part Number	1 2 3 4 5 6 7 Nomenclature	Usage Code	Units Per Assy.
		Tab Controls		
	55-7034	Installation—Aileron rudder and elevator trim tabs	All	NP
	56-4965-504	Installation—Aileron tab control	All	NP
90-1	56-4965-506	Control Assembly—Aileron tab (see fig. 94)	All	1
2	9-5311	Installation—Rudder tab control	All	NP
3	AN310-4	Nut—Aircraft castle	All	1
4	AN960D416	Washer—Plain	All	1
5	BAC1604-12	Spacer	All	1
	6-12616	Wheel Assembly—Rudder tab control	All	1
6	AN200K4	Bearing—Heavy duty	All	1
7	6-13126	Wheel—Rudder tab control	All	1
8	3-19010	Disc—Actuating	All	1
9	3-16987-4	Pointer Assembly—Tab indicator	All	1
10	1-25593	Support—Pointer assembly	All	1
11	1-25592	Plate—Rudder tab indicator	All	1
12	525-10-11	Screw—Washer head	All	2
13	1-29694	Spacer—Rudder tab control	All	1
14	BAC1001-18	Key	All	2
15	51-118-3	Drum Assembly	All	1
16	AN200K4	Bearing—Heavy duty	All	1
17	AN4-44	Bolt—Aircraft	All	1
18		Elevator Trim Tab Unit (see fig. 103)		
19	6-9340-2	Bracket Assembly—Elevator tab (see fig. 79)	All	Ref

PUBLISHED BY AVIALOGS.COM

FUSELAGE

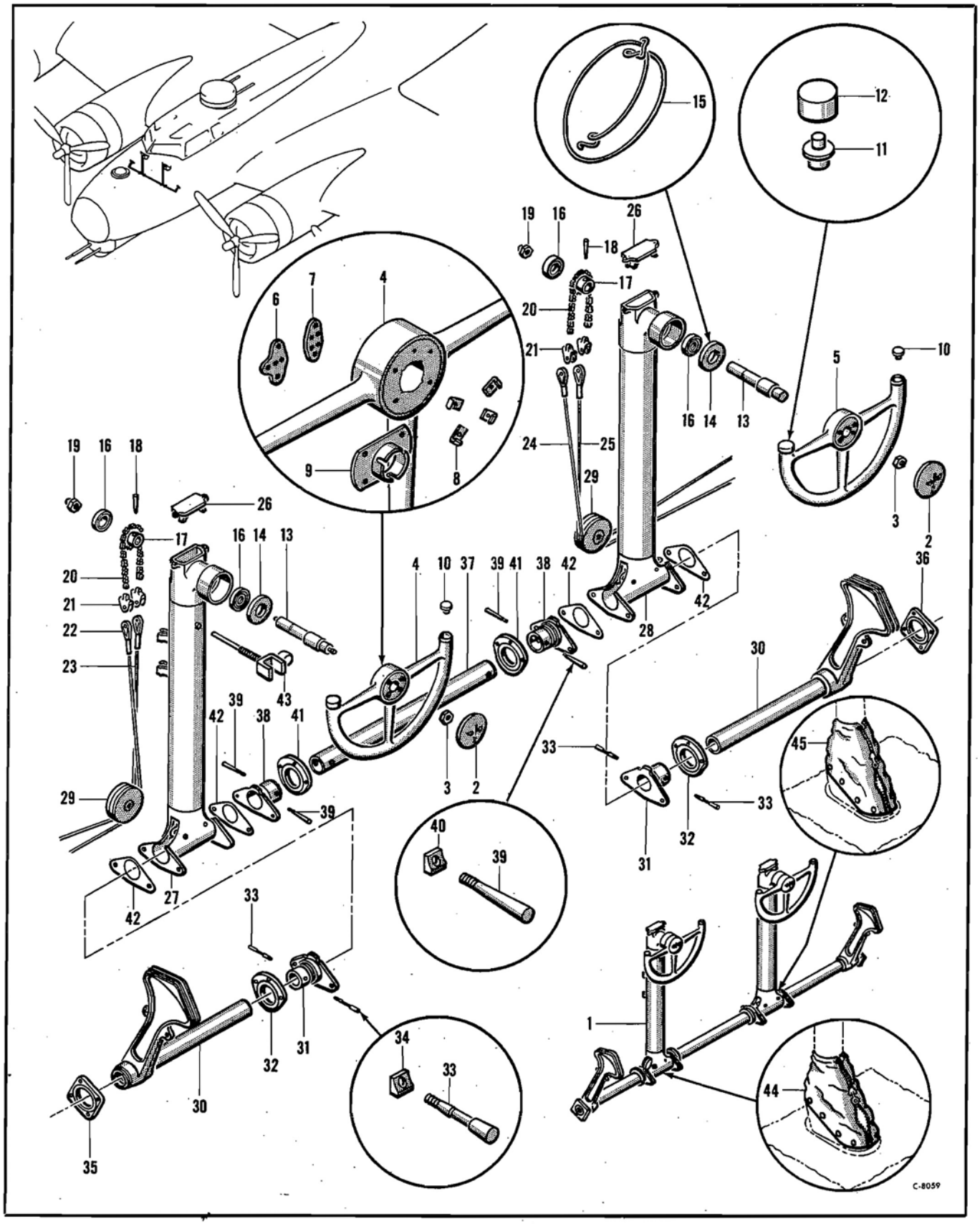

Figure 91—Control Column

PUBLISHED BY AVIALOGS.COM

FUSELAGE

Control Column

Figure & Index No.	Part Number	1 2 3 4 5 6 7 Nomenclature	Usage Code	Units Per Assy.
		Control Column		
	15-8538	Installation—Aileron and elevator control column	All	NP
91-1	15-8538-1	Column Assembly	All	1
2	1-17998	Cap—Control wheel hub	EA	2
	3-21034-3	Cap Assembly—Control wheel	QH	2
3	AN320-10	Nut—Aircraft shear	All	2
4	6-11306	/ Wheel Assembly—Control column (pilots)	EA	1
	6-11306-6	Wheel Assembly—Control column (pilots)	KH	1
	6-11306-8	Wheel Assembly—Control column (pilots)	DK	1
5	6-11306-1	Wheel Assembly—Control column (co-pilots)	EA	1
	6-11306-7	Wheel Assembly—Control column (co-pilots)	KH	1
	6-11306-9	Wheel Assembly—Control column (co-pilots)	DK	1
	AC168-4	Wheel—16 in. aircraft (pilots) (American Hard Rubber)	All	1
	AC168-3	Wheel—16 in. aircraft (co-pilots) (American Hard Rubber)	All	1
6	1103	Panel Assembly (used on 6-11306, -1, -6 & -7 only) (Korry Mfg. Co.)	TA	1
7	3-24684	Panel—Microphone switch (used on 6-11306-8 & -9 only)	DK	1
8	1-26415	Clip—Spring (used on 6-11306 & -1 only)	EA	4
9	6-14649	Base—Wheel cap (used on 6-11306-6, -7, -8 & -9 only)	QH	1
10	A219-95A	Plug (American Hard Rubber Co.)	All	1
11	624	Switch Assembly (Edwards & Co.)	All	1
12	3-32184	Cap—Microphone switch	BP	1
13	1-21347	Shaft—Control column	All	2
14	1-17911	Slipring Assembly—Control wheel	TA	2
	6-16388	Installation—Microphone switch wire (pilots)	DK	NP
	6-16388-1	Installation—Microphone switch wire (co-pilots)	DK	NP
	6-16388-6	Wire Assembly (pilots)	DK	1
	6-16388-7	Wire Assembly (co-pilots)	DK	1
15	3-25127	Support—Wire (pilots)	DK	1
	3-25127-1	Support—Wire (co-pilots)	DK	1
16	AN201K16A	Bearing—Metal shielded ball	All	4
17	41-2834-1	Sprocket—Control column	All	2
18	AN386-2-10	Pin—Threaded taper	All	2
	AN975-3	Washer—Taper pin	All	2
	AN320-3	Nut—Aircraft shear	All	2
19	BAC1099B10	Nut	All	2
20	85-3540-703	Chain Assembly	All	2
	40	Chain (Rex)	All	1
	40	Link—Connector (Rex)	All	1
21	51-97	Stop—Cable control	All	4
22	BAC1824-610-1039	Cable Assembly	All	1
23	BAC1824-610-837	Cable Assembly	All	1
24	BAC1824-607-1081	Cable Assembly	All	1
25	BAC1824-607-901	Cable Assembly	All	1
26	41-9817	Guard—Aileron chain	All	4
27	15-8538-2	Tube Assembly—LH	TP	1
	15-8538-16	Tube Assembly—LH	RC	1
28	15-8538-3	Tube Assembly—RH	TP	1
	15-8538-17	Tube Assembly—RH	RC	1
29	1-17389	Pulley—Roller bearing	All	4
	15-8538-11	Tube Assembly—LH	All	1
	15-8538-12	Tube Assembly—RH	All	1
30	85-3540-601	Tube Assembly	All	1
31	3-11870	Sleeve—Column support bearing	All	1
32	41-9811	Bearing—Control column	All	1
	A546	Bearing—Ball (Federal Bearing)	All	1
33	1-16755	Pin—Special taper	All	2
34	41-9808	Washer—Control column	All	2
	AN320-4	Nut—Aircraft shear	All	2
35	21-9360	Bearing Assembly—Control column (LH)	All	1
36	21-9360-1	Bearing Assembly—Control column (RH)	All	1
	A546	Bearing—Ball (Federal Bearing)	All	1
	15-8538-10	Tube Assembly	All	1
37	85-3540-706	Tube	All	1
38	3-11870	Sleeve—Column support bearing	All	2
39	AN386-3-18	Pin—Threaded taper	All	4
40	41-9808	Washer—Control column	All	4
	AN320-4	Nut—Aircraft shear	All	4
41	41-9811	Bearing—Control column	All	2
42	41-9338	Shim—Control column support	All	4
43	1-21350	Pin Assembly—Aileron lock	All	1
	1-21349	Spring—Aileron lock pin	All	1
	14-1681	Installation—Control column boot (LH)	All	NP
	14-1681-1	Installation—Control column boot (RH)	All	NP
44	14-1681-2	Boot Assembly (LH)	All	1
45	14-1681-3	Boot Assembly (RH)	All	1

PUBLISHED BY AVIALOGS.COM

FUSELAGE

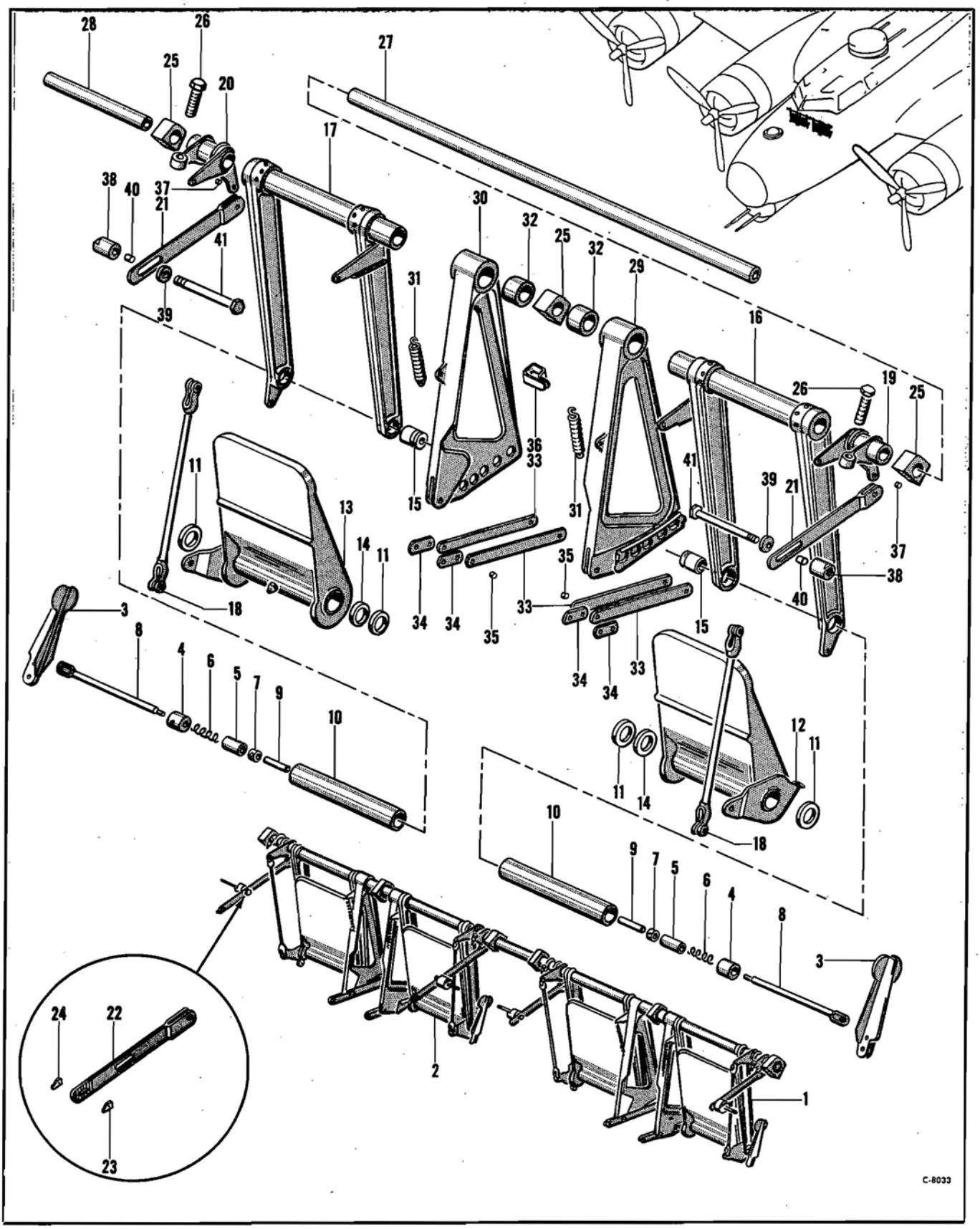

Figure 92—Rudder Pedals

PUBLISHED BY AVIALOGS.COM

FUSELAGE

Rudder Pedals

Figure & Index No.	Part Number	1 2 3 4 5 6 7 Nomenclature	Usage Code	Units Per Assy.
	75-3508	Installation—Rudder pedals (see fig. 89)	All	NP
92-1	75-3508-600	Pedal Assembly (LH)	All	1
2	75-3508-601	Pedal Assembly (RH)	All	1
	43-7806	Rod Assembly—Pedal adjusting	All	2
3	3-5369	Lever—Pedal adjusting foot	All	1
4	51-424	Bushing—Adjusting pin guide	All	1
5	21-3753	Sleeve—Pedal adjusting rod	All	1
6	41-8702	Spring—Compression	All	1
7	21-3754-1	Collar—Pedal adjusting rod	All	1
8	51-421	Rod—Pedal adjusting control	All	1
	AN393-9	Pin—Flat head	All	1
9	51-427	Pin—Pedal adjusting lock	All	1
10	51-425	Shaft—Rudder pedal	All	2
11	21-2362-72-56	Washer—.051 aluminum alloy	All	4
12	46-7284	Pedal Assembly—Rudder and brake (LH)	GB	1
13	46-7284-1	Pedal Assembly—Rudder and brake (RH)	GB	1
	46-7284-402	Pedal Assembly—Rudder and brake (LH)	PL	1
	46-7284-403	Pedal Assembly—Rudder and brake (RH)	PL	1
	AN286-1	Lubricator—Pressure-grip type PT	All	1
14	21-2364-72-56	Washer	All	2
15	51-426	Spool—Adjusting pin guide	All	1
16	59-1724	Stirrup Assembly—Rudder pedal (LH)	All	1
17	59-1724-1	Stirrup Assembly—Rudder pedal (RH)	All	1
	21-2136	Bushing	All	1
	21-2136-2	Bushing	All	1
	AN286-1	Lubricator—Pressure-grip type PT	All	4
18	21-2169	Rod Assembly—Brake control	All	2
19	3-9774-7	Lever Assembly—Brake control (LH)	All	1
20	3-9774-8	Lever Assembly—Brake control (RH)	All	1
21	1-18421	Link Assembly—Brake stop (LH only)	All	2
22	3-13486	Link Assembly—Brake stop (RH only)	All	2
23	1-16061	Stop—Brake control (LH only)	All	2
24	1-16061-1	Stop—Brake control (RH only)	All	2
25	41-9606	Support	All	3
26	41-4691-1	Bolt—Brake control	All	2
27	21-2226-2	Shaft—Rudder pedals	All	1
28	51-454-7-0	Connector—Tube (on 75-3508-600 only)	All	1
29	6-8145	Quadrant Assembly—Rudder pedal adjusting (LH)	All	1
30	6-8145-1	Quadrant Assembly—Rudder pedal adjusting (RH)	All	1
31	41-1216	Spring—Stirrup control	All	2
32	51-423-1-0	Spacer	All	2
33	21-5179	Link—Cable	All	4
34	21-5179-2	Link—Cable	All	4
35	BAC326-34S	Bushing—Bearing	All	2
36	21-4585-42-12	Clamp	All	1
37	BAC274S3-9	Bushing—Bearing	All	1
38	1-27741	Spacer—1-4 bolt	All	4
39	21-2363-48-17	Washer—.063 steel	All	4
40	BAC326-15S	Bushing—Bearing	All	4
41	AN4-36A	Bolt—Aircraft	All	4

PUBLISHED BY AVIALOGS.COM

FUSELAGE

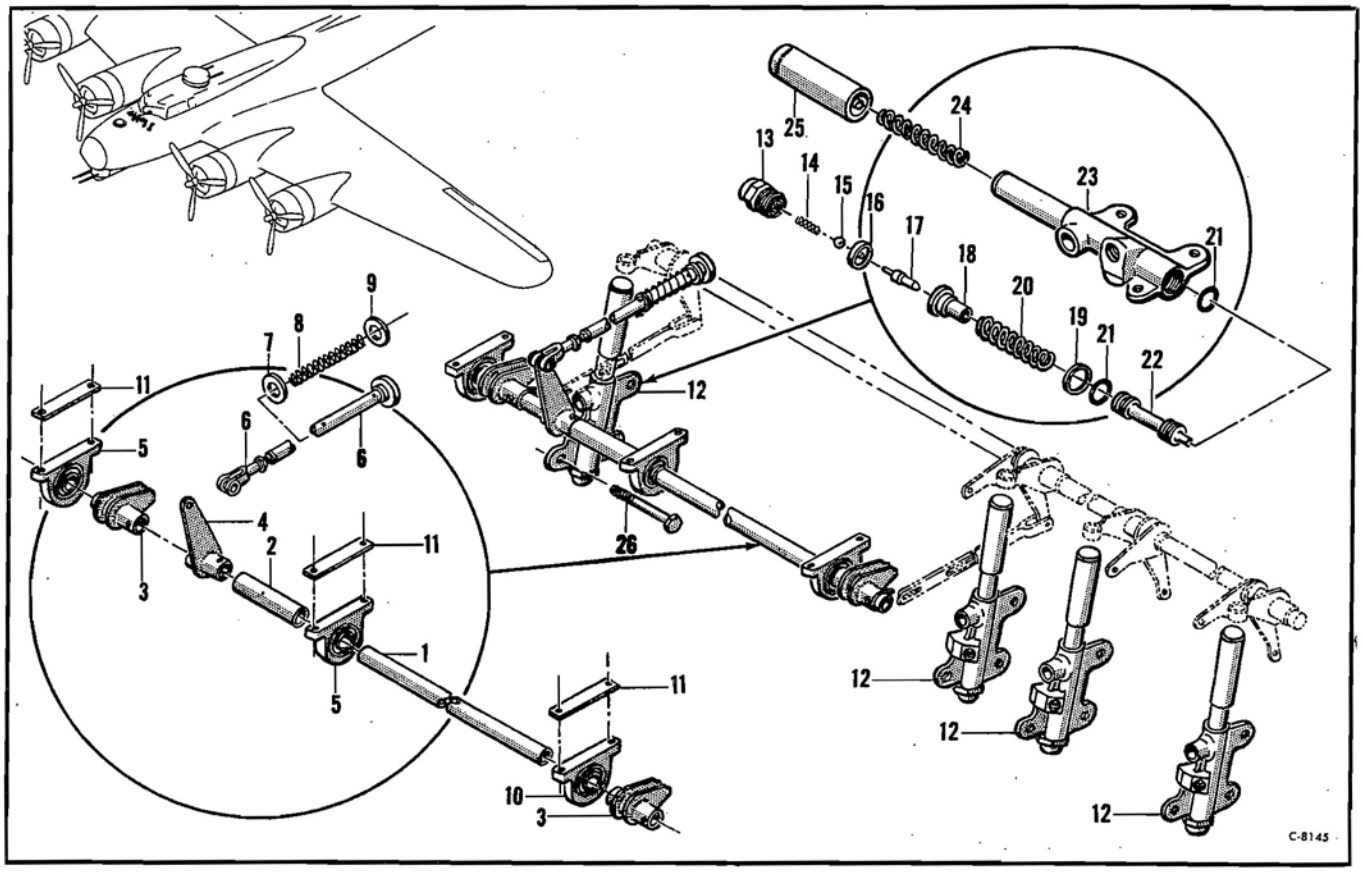

Figure 93—Brake Control

Brake Control

Figure & Index No.	Part Number	1 2 3 4 5 6 7 Nomenclature	Usage Code	Units Per Assy.
	64-1600	Installation—Brake control	All	NP
	54-1600-500	Shaft Assembly—Parking brakes	All	1
93-1	51-704	Tube—Brake control	All	1
2	51-466-2-62	Spacer	All	1
3	41-4543-5	Arm Assembly—Brake control	All	2
4	41-4544	Arm Assembly—Brake control	All	1
5	41-9411	Bearing Assembly—Brake control	All	2
	AN201K12A	Bearing—Ball	All	1
6	21-7196-14	Rod Assembly—Control	All	1
	41-9960	Knob—Parking brake	All	1
	AN486-4	Clevis—Rod end adjusting	All	1
7	21-2364-48-33	Washer—.064 dural	All	1
8	21-7468	Spring—Compression	All	1
9	41-9501-32-17	Washer—1-8 neoprene	All	1
10	41-9411	Bearing Assembly—Brake control	All	1
	AN201K12A	Bearing—Ball	All	1
11	51-784	Shim—Parking brake bearing	All	AR
	51-784-1	Shim—Parking brake bearing	All	AR
	64-1600-600	Valve Assembly—Wheel brake (LH outboard)	All	1
	64-1600-601	Valve Assembly—Wheel brake (RH inboard)	All	1
	64-1600-602	Valve Assembly—Wheel brake (RH outboard)	All	1
	64-1600-603	Valve Assembly—Wheel brake (LH inboard)	All	1
12	3-9584-4	Valve Assembly (LH outboard and RH inboard only)	All	1
	3-9584-5	Valve Assembly (RH outboard and LH inboard only)	All	1
13	1-21028	Cap—End wheel brake	All	1
14	41-3724	Spring—Compression	All	1
15	3-9584-3	Ball—Steel	All	1
16	41-3711	Seat—Ball wheel brake	All	1
17	41-3712-1	Pintle—Wheel brake	All	1
18	41-3713-1	Guide—Pintle wheel brake	All	1
19	41-6189-1	Washer—Wheel brake	All	1
20	41-9384	Spring—Compression	All	1
21	AN6227-11	Packing—"O" ring hydraulic	All	2
22	3-22434	Piston—Brake valve	All	1
23	3-14243	Cylinder—Wheel brake (used on 3-9584-4 only)	All	1
	3-14243-1	Cylinder—Wheel brake (used on 3-9584-5 only)	All	1
24	41-3722	Spring—Compression	All	1
25	41-6187-1	Guide Assembly—Wheel brake	All	1
26	AN3-20A	Bolt—Aircraft	All	12
	51-477-0-39	Spacer	HA	12
	41-5533-0-39	Spacer	JI	12

PUBLISHED BY AVIALOGS.COM

FUSELAGE

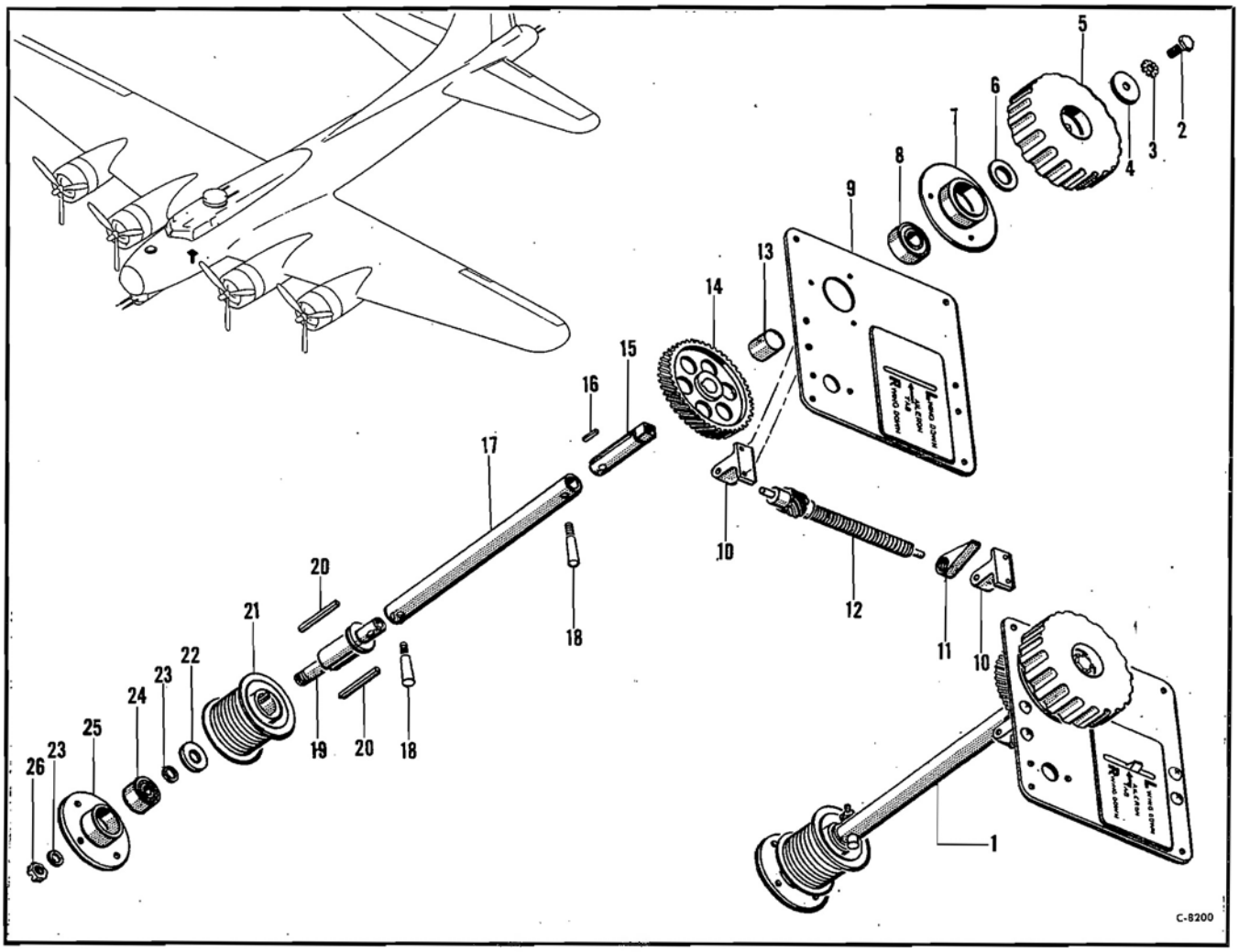

Figure 94—Aileron Tab Control Assembly

Aileron Tab Control Assembly

Figure & Index No.	*Part Number*	*1 2 3 4 5 6 7* *Nomenclature*	*Usage Code*	*Units Per Assy.*
94-1	56-4965-506	Control Assembly—Aileron tab (see fig. 90)	All	Ref
	56-4965-502	Housing Assembly—Upper	All	1
2	AN3-4A	Bolt—Aircraft	All	1
3	AN936B10	Washer—Lock	All	1
4	AN970-3	Washer—Flat	All	1
5	21-9885	Knob—Tab control	All	1
6	AN960-816	Washer—Plain	All	1
	21-9531-1	Housing Assembly—Upper	EA	1
	21-9531-6	Housing Assembly—Upper	QH	1
7	21-9531-4	Housing—Upper	All	1
8	AN201K8A	Bearing—Ball	All	1
9	3-12480	Plate Assembly—Aileron tab control	All	1
10	41-9774-1	Bearing—Control	All	2
11	41-9514	Pointer—Tab control	All	1
12	21-5943	Shaft Assembly—Tab control	All	1
13	BAC1608-34	Spacer	All	1
14	21-9533	Gear—Tab control	All	1
15	21-9904	Shaft—Aileron tab control	All	1
16	BAC1001-6	Key	All	1
17	56-4965-500	Tube—Aileron control tab	N	1
	56-4965-507	Tube—Aileron control tab	WF	1
18	AN386-1-6	Pin—Threaded taper	All	2
	56-4965-505	Housing Assembly—Lower	All	1
19	51-126	Shaft—Aileron tab control	All	1
20	BAC1001-27	Key	All	2
21	51-118-2	Drum Assembly—Tab control	All	1
22	21-2366-68-26	Washer—Aluminum alloy	All	1
23	21-2364-40-26	Washer—Dural	All	2
	41-9974	Housing Assembly—Bearing	All	1
24	5200	Bearing—(Fafnir)	All	1
25	41-9974-1	Flange—Bearing housing	All	1
26	AN310-6	Nut—Aircraft castle	All	1

PUBLISHED BY AVIALOGS.COM

FUSELAGE

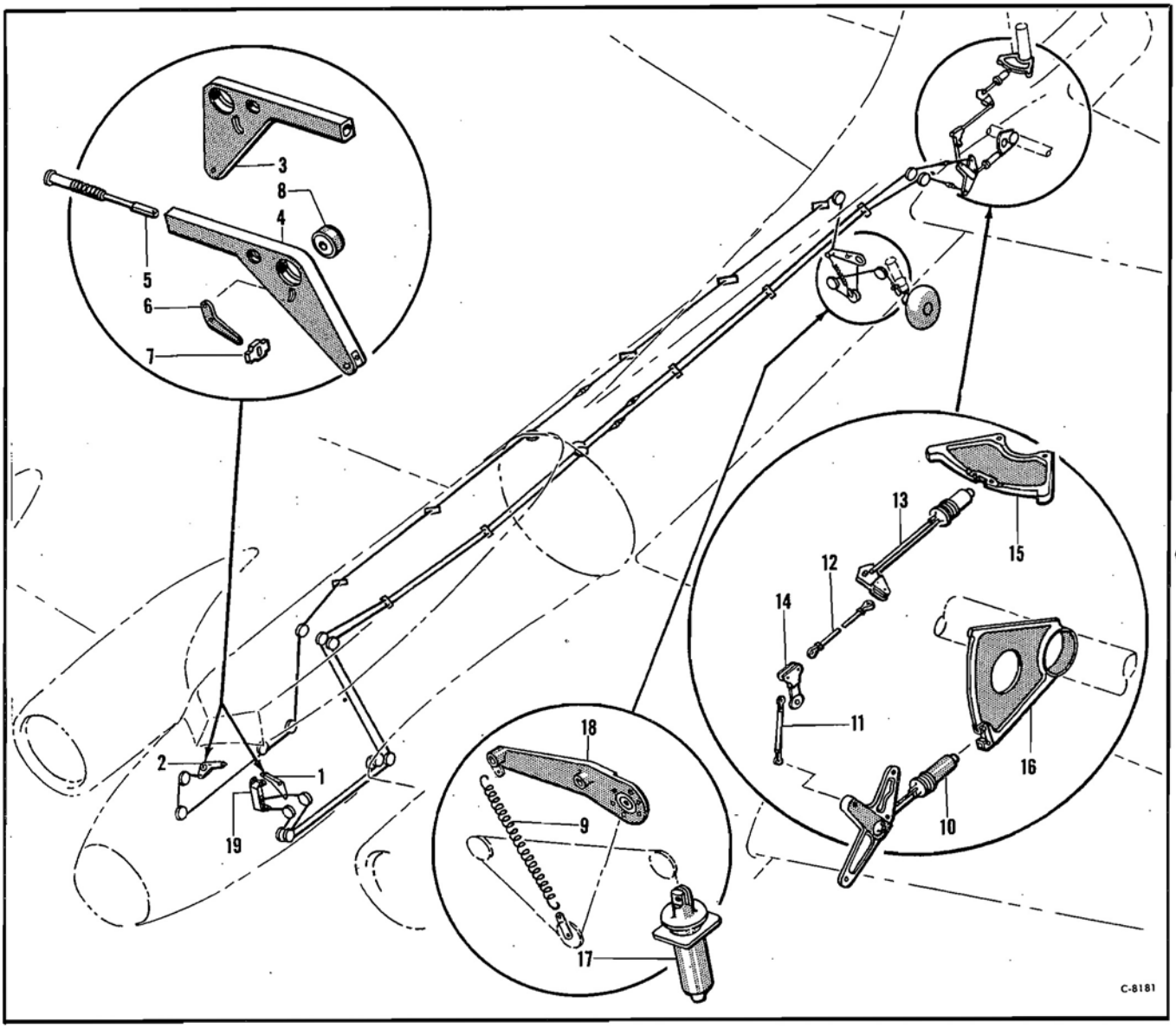

Figure 95—Tail Wheel and Surface Control Locks

Tail Wheel and Surface Control Locks

Figure & Index No.	*Part Number*	*1 2 3 4 5 6 7 Nomenclature*	*Usage Code*	*Units Per Assy.*
		Tail Wheel and Surface Control Locks		
	15-7033	Installation—Tail wheel and surface control locks	All	NP
95-1	3-11906	Lever Assembly—Lock (rudder and elevator)	All	1
2	3-11906-1	Lever Assembly—Lock (tail wheel)	All	1
3	3-11908	Arm—Tail wheel lock (used on 3-11906-1)	All	1
4	3-11905	Arm—Rudder and elevator lock (used on 3-11906)	All	1
5	51-157	Plunger Assembly—Tailwheel lock	All	1
6	51-156	Lever—Surface lock	All	1
7	41-7081-1	Catch—Surface lock	All	1
8	AN200K4	Bearing—Heavy duty	All	1
9	41-5972	Spring—Tension	All	1
10	7-1537	Installation—Elevator lock (see fig. 96)	All	NP
11	1-19052-6-6	Rod Assembly—Control	All	1
12	1-18327-36-1	Rod Assembly—1-2 in. control	All	1
13	9-3586	Installation—Rudder lock (see fig. 96)	All	NP
	15-7603-6	Bracket Assembly—Control (see fig. 75)	All	Ref
14	3-13584	Crank Assembly—Surface lock	All	Ref
15	9-3590	Quadrant Assembly—Rudder lock and stop (see fig. 58)	All	Ref
16	9-3613	Quadrant Assembly—Elevator lock and stop (see fig. 58)	All	Ref
17	3-10080-2	Lock Assembly—Tail wheel (see fig. 171)	All	Ref
18	43-11993	Lever Assembly—Tail wheel lock (see fig. 75)	All	Ref
19	6-4856	Bracket Assembly—Rudder tab (see fig. 66)	All	Ref

PUBLISHED BY AVIALOGS.COM

FUSELAGE

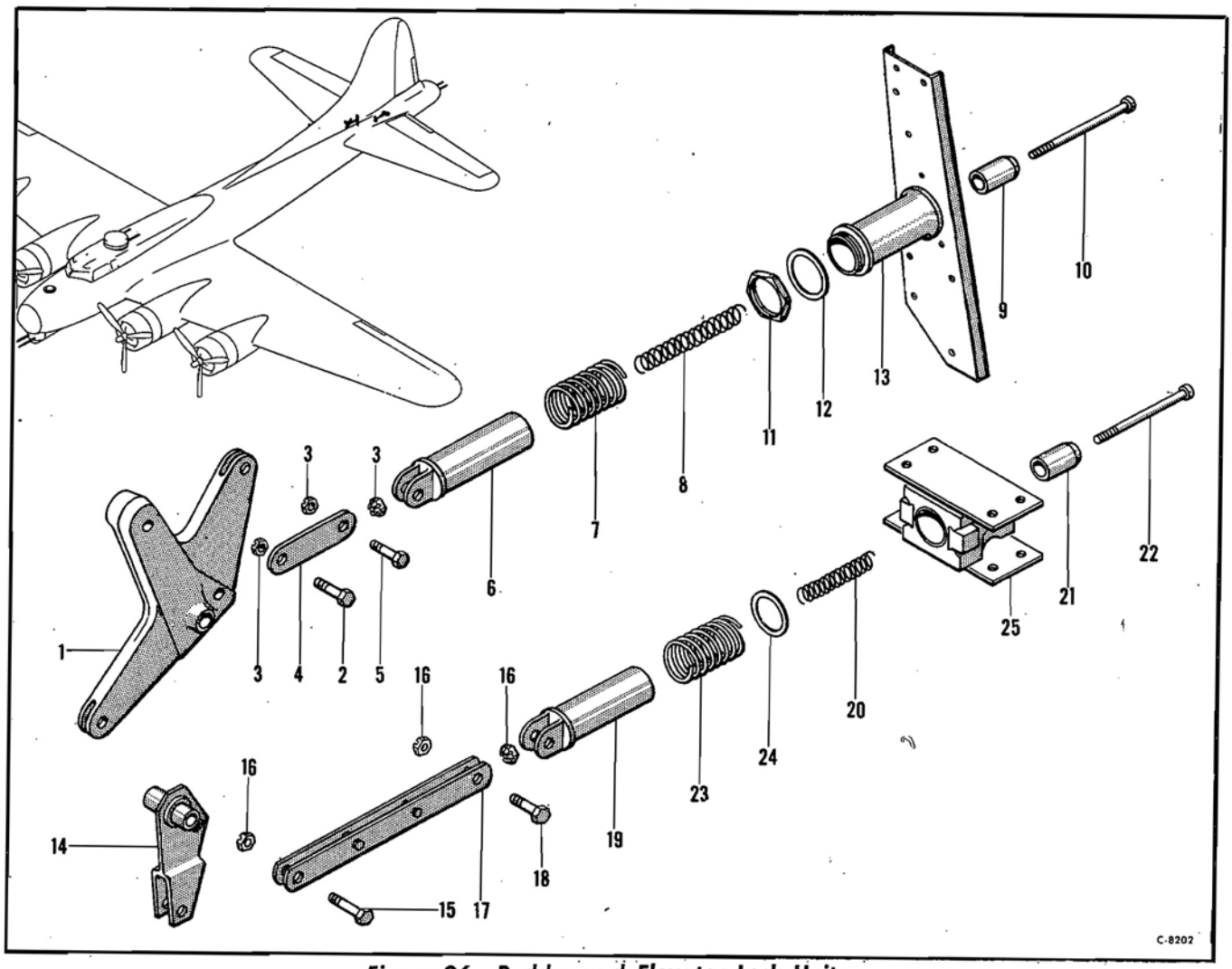

Figure 96—Rudder and Elevator Lock Units

Rudder and Elevator Lock Units

Figure & Index No.	Part Number	1 2 3 4 5 6 7 Nomenclature	Usage Code	Units Per Assy.
		Rudder and Elevator Lock Units		
	7-1537	Installation—Elevator lock (see fig. 95)	All	NP
	7-1537-1	Plunger Assembly	All	1
96-1	7-1528	Arm Assembly—Control surface lock	All	1
2	AN4-12	Bolt—Aircraft	All	1
3	AN310-4	Nut—Aircraft castle	All	3
4	21-9443-8	Link—Control surface lock	All	1
5	AN4-11	Bolt—Aircraft	All	1
6	21-9441-150	Plunger—Control surface lock	All	1
7	41-3560	Spring—Compression	All	1
8	1-18539	Spring—Compression	All	1
9	21-9444	Plunger—Control surface lock	All	1
10	21-6928-75	Bolt—Fillister head	All	1
11	21-6758	Nut—1-4 18 lock (see fig. 75)	All	Ref
12	1-18652	Washer—Control surface lock (see fig. 75)	All	Ref
13	3-13618	Channel Assembly—Elevator stop (see fig. 75)	All	Ref
	9-3586	Installation—Rudder lock (see fig. 95)	All	NP
	9-3586-1	Lock Assembly—Rudder	All	1
14	1-18257	Crank Assembly—Rudder lock control	All	1
15	NAS54-7-5	Bolt—Close tolerance	All	1
16	AN310-4	Nut—Aircraft castle	All	3
17	1-18491	Link Assembly—Rudder lock	All	1
18	NAS54-11	Bolt—Close tolerance	All	1
19	21-9441-100	Plunger—Control surface lock	All	1
20	41-5699	Spring—Compression	All	1
21	21-9444	Plunger—Control surface lock	All	1
22	21-6928-50	Bolt—Fillister head	All	1
23	41-3560	Spring—Compression	All	1
24	1-15573-80-61	Washer—Retainer	All	1
	15-7536-1	Beam Assembly—Rudder hinge (see fig. 79)	All	Ref
25	3-13625	Support Assembly—Rudder lock plunger (see fig. 79)	All	Ref

RESTRICTED
PUBLISHED BY AVIALOGS.COM

FUSELAGE

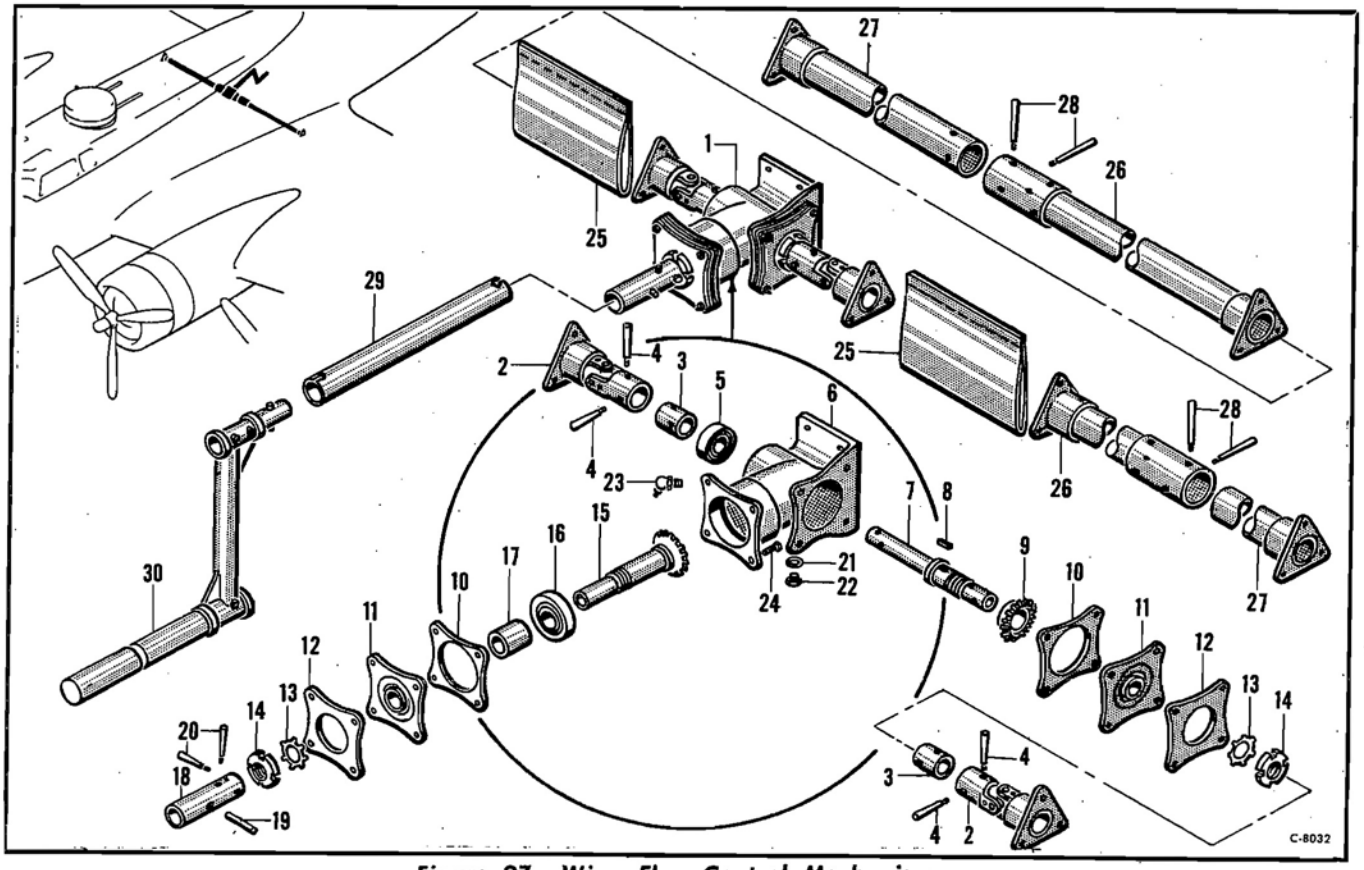

Figure 97—Wing Flap Control Mechanism

Wing Flap Control Mechanism

Figure & Index No.	Part Number	1 2 3 4 5 6 7 Nomenclature	Usage Code	Units Per Assy.
		Wing Flap Control Mechanism		
	47-1331	Installation—Wing flap control	All	NP
97-1	46-7378	Unit Assembly—Manual flap control	All	1
2	3-19275	Joint Assembly—Flap control	All	2
	41-4220-1	Coupling	All	1
	BAC1851-16	Joint—Universal	GB	1
	44B6540	Joint—Universal	PL	1
3	1-27901	Sleeve	All	2
4	AN386-1-8A	Pin—Threaded taper	All	4
5	AN201K10A	Bearing—Metal shielded ball	All	1
6	46-6603	Housing—Flap control	All	1
7	41-1436-1	Shaft	All	1
8	BAC1002-8	Key	All	1
9	41-1434	Gear—Flap control	All	1
10	41-1439	Shim	All	2
11	41-4483	Cap Assembly—Flap control	All	2
	AN201K12A	Bearing—Metal shielded ball	All	1
12	41-2801	Plate	All	2
13	41-4602-1	Washer	All	2
14	41-4601	Nut	All	2
15	41-1435	Gear	All	1
16	AN201K12A	Bearing—Metal shielded ball	All	1
17	1-19084	Spacer	All	1
	41-7297	Terminal Assembly—Crank extension	All	1
18	41-7297-1	Terminal	All	1
19	41-7297-2	Pin	All	1
20	AN386-1-7A	Pin—Threaded taper	All	2
21	AN900-6	Gasket—Annular copper	All	1
22	905-6	Plug—Drilled hex	All	1
23	AN286-1	Lubricator—Pressure-grip type PT	All	1
24	AN3-7A	Bolt—Aircraft	All	8
	41-5918	Installation—Universal grease boot	GB	NP
25	41-5918-1	Boot	GB	1
26	47-1331-3	Tube Assembly	All	2
	41-5035-17-2	Tube Assembly	All	1
27	41-5035-35-10	Tube Assembly (approximately .25 too long and is to be trimmed on installation)	All	2
28	AN386-1-10	Pin—Threaded taper	All	4
29	21-9586	Extension (see fig. 69)	All	Ref
30	AN4098-1	Crank—Inertia starter hand (see fig. 69)	All	Ref

PUBLISHED BY AVIALOGS.COM

FUSELAGE

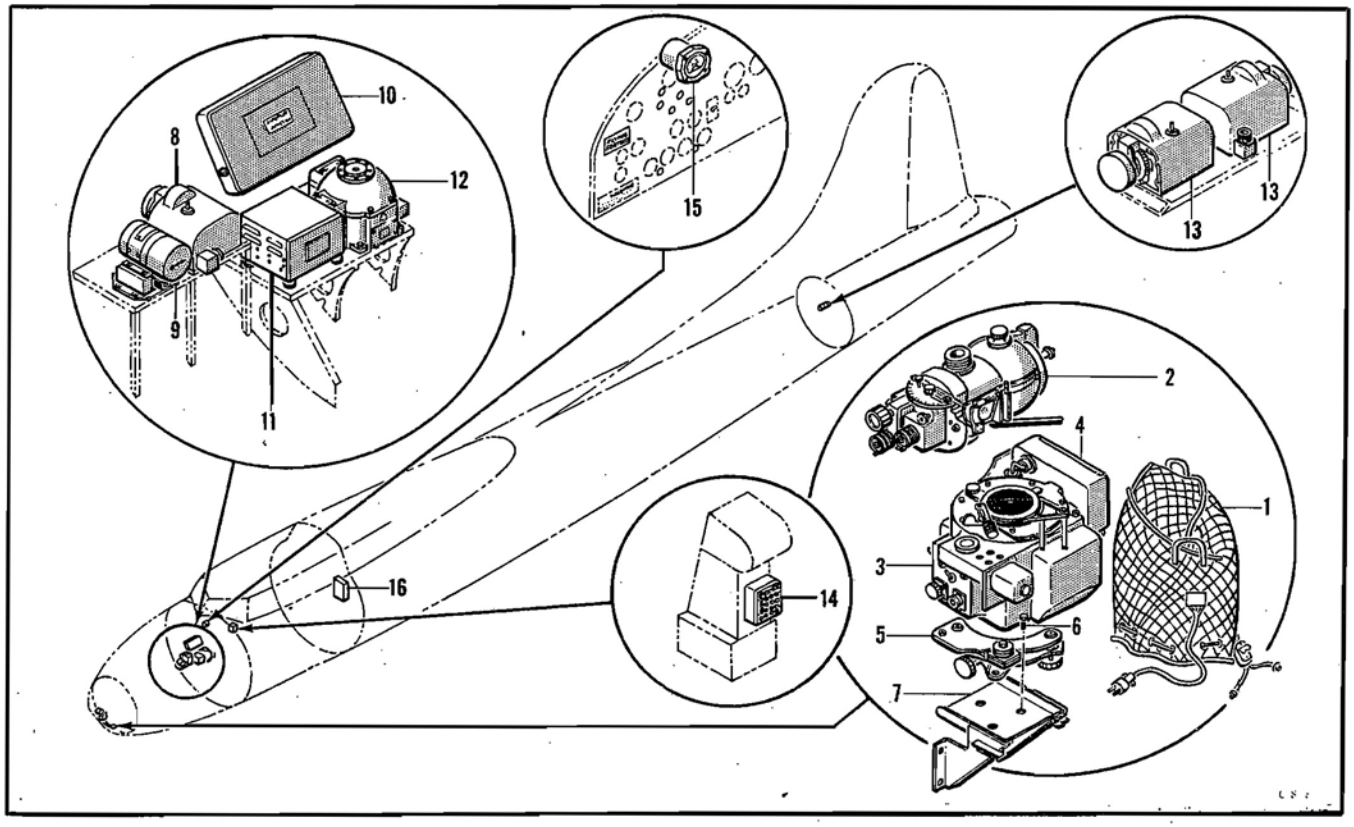

Figure 98—Automatic Flight Control Equipment

Automatic Flight Control Equipment

Figure & Index No.	Part Number	1 2 3 4 5 6 7 Nomenclature	Usage Code	Units Per Assy.
		Automatic Flight Control Equipment		
	1-21987	Installation—Model M series bombsight	All	NP
98-1	NO NUMBER	Bag (PDB 20616 rev no. 1)	All	1
2	NO NUMBER	Bombsight—M series (Spec R24711) GFE	All	1
3	NO NUMBER	Stabilizer—Gyro-directional (Spec R24798) GFE	All	1
	NO NUMBER	Pad—Heating (Type A-1) (Spec 40453) GFE	All	1
4	NO NUMBER	Panel—Directional (Spec R24796) GFE	All	1
	9-7045	Installation—Bombsight mount	All	NP
5	SKE11779	Mount—Bombsight (Type B-7) (Lovell Mfg. Co.) GFE	All	1
6	AN4-7A	Bolt—Aircraft	All	3
	9-6775	Installation—Bombsight support	All	NP
7	9-6776-0	Support Assembly—Bombsight	J	1
	9-6776-8	Support Assembly—Bombsight	LF	1
	9-6776-7	Support Assembly—Bombsight	XM	1
	15-9266	Installation—Modified automatic flight control	All	NP
	3-15185	Installation—Aileron servo and converter unit	All	NP
8	1-23584	Motor—Aileron servo (Spec 24860) GFE	QB	1
	1-23582	Motor—Aileron servo (Spec 24860) GFE	XM	1
9	NO NUMBER	Inverter—Rotary (Spec C24862) GFE	All	1
	14-3006	Installation—Modified automatic flight control shield	All	NP
	14-3006-2	Shield Assembly	QB	1
	14-3006-3	Shield Assembly	WM	1
	14-3006-6	Shield Assembly	OQ	1
	14-3006-7	Shield Assembly	BR	1
10	9-6617	Shield Assembly—Terminal (Interchangeable with G1028A6CA1 Minneapolis-Honeywell)	QB	1
	9-6617-5	Shield Assembly—Terminal (Interchangeable with G1028A6CA1 Minneapolis-Honeywell)	WM	1
	9-6617-8	Shield Assembly—Terminal (Interchangeagle with G1028A6CA1 Minneapolis-Honeywell)	OQ	1
	9-6617-9	Shield Assembly—Terminal (Interchangeable with G1028A6CA1 Minneapolis-Honeywell)	BR	1
	9-6612	Shield Assembly—Junction	All	1
	407229B	Resistor Assembly—Card (Minneapolis-Honeywell) GFE	QB	1
	407220A	Resistor Assembly—Card (Minneapolis-Honeywell) GFE	All	3
	3-15195	Installation—Modified A.F.C.E. gyro and amplifier	All	NP
11	NO NUMBER	Amplifier (Spec C24859) GFE	All	1
12	NO NUMBER	Gyro—Vertical flight (Spec C24858) GFE	All	1
	PI1A1	Cover Assembly (General Electric) GFE	All	1
	3-15184	Installation—Rudder and elevator servo unit	All	NP
13	1-23582	Motor—Elevator servo (Spec C24860) GFE	All	2
14	NO NUMBER	Box—Pilots control (Spec C24861) (Type A-6) GFE (see fig. 100)	All	Ref
15	NO NUMBER	Indicator—Pilots director (Spec C24863) (Type D1Z) GFE (see fig. 109)	All	Ref
16	54-2079	Shield—Station 4 fuse (see fig. 111)	All	Ref

PUBLISHED BY AVIALOGS.COM

FUSELAGE

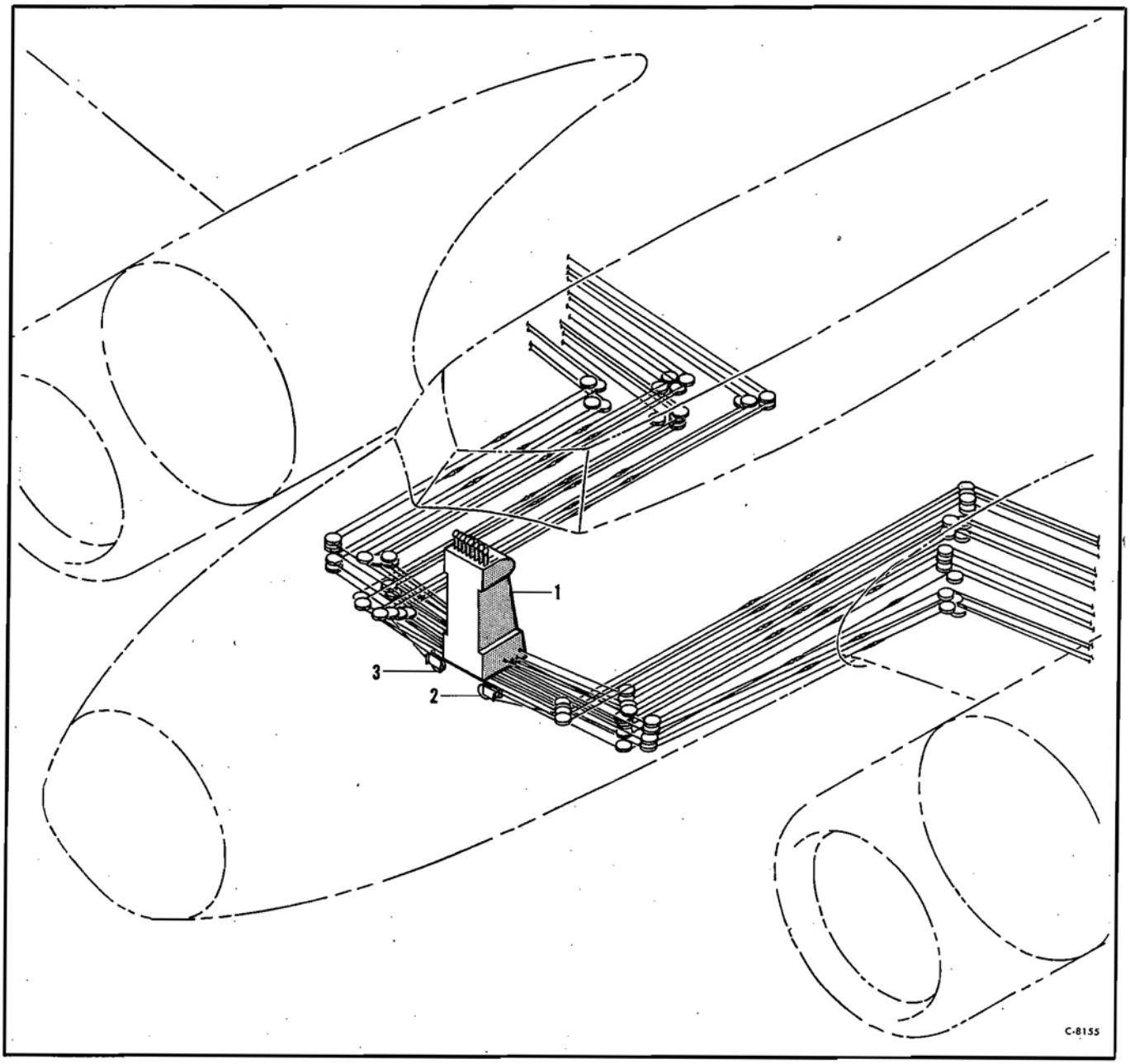

Figure 99—Engine Controls

Engine Controls

Figure & Index No.	*Part Number*	*1 2 3 4 5 6 7 Nomenclature*	*Usage Code*	*Units Per Assy.*
		Engine Controls		
	15-7035	Installation—Throttle control	All	NP
99-1	15-9275	Installation—Engine control stand (see fig. 100)	All	NP
	15-7036	Installation—Mixture control	All	NP
	15-7037	Installation—Supercharger control	E	NP
	15-7040	Installation—Propeller pitch control	All	NP
2	6-7791-21	Installation—Supercharger and mixture control bracket (see fig. 66)	E	NP
3	6-7791-22	Installation—Supercharger and mixture control bracket (see fig. 66)	All	NP

PUBLISHED BY AVIALOGS.COM

FUSELAGE

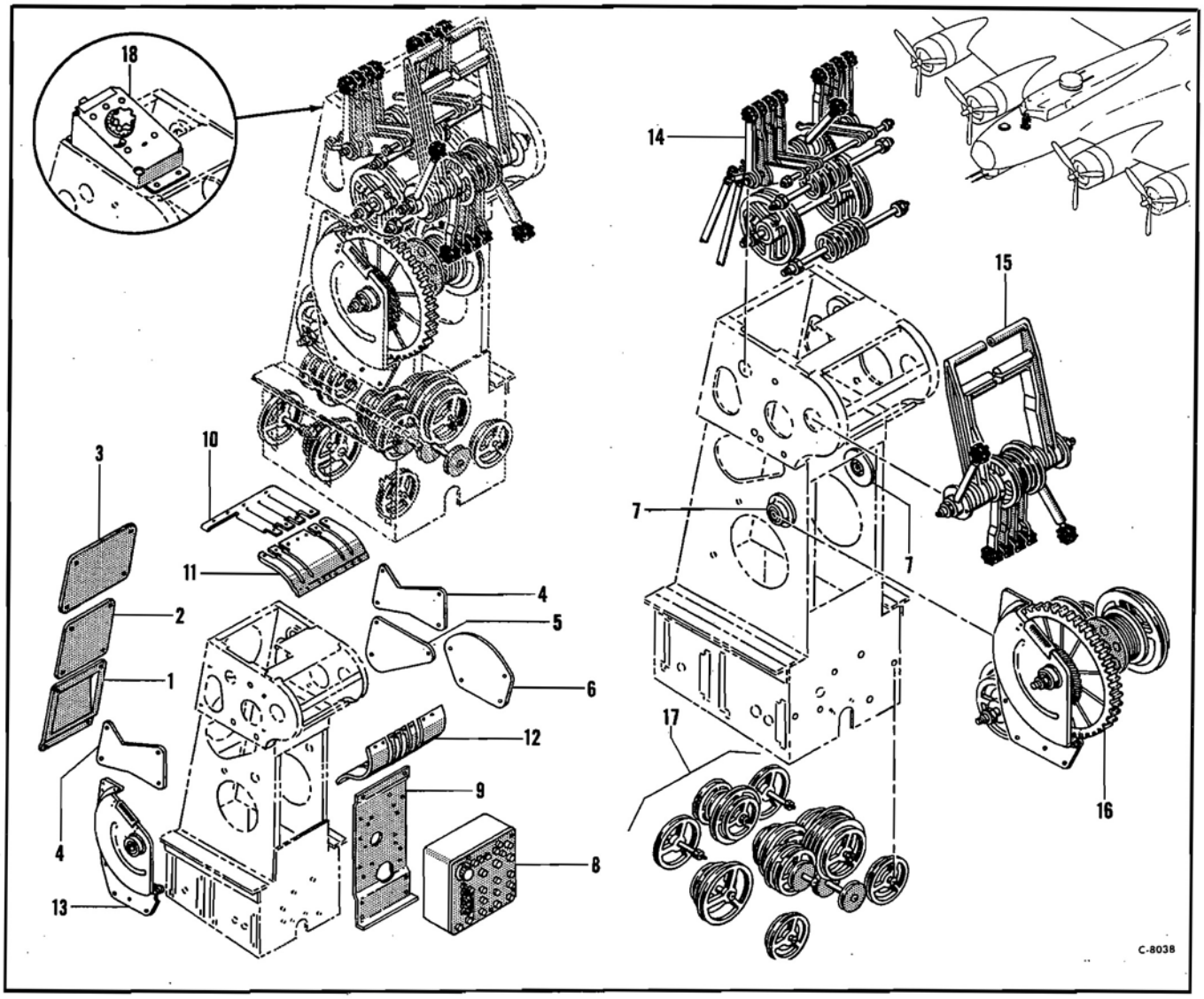

Figure 100—Engine Control Stand

Engine Control Stand

Figure & Index No.	*Part Number*	*1 2 3 4 5 6 7 Nomenclature*	*Usage Code*	*Units Per Assy.*
		Engine Control Stand		
	15-9275	Installation—Engine control stand	All	NP
	15-9275-3	Stand Assembly—Engine control	E	1
	15-9275-4	Stand Assembly—Engine control	UE	1
	15-9275-5	Stand Assembly—Engine control	IN	1
	15-9275-7	Stand Assembly—Engine control	WQ	1
	65-5689-515	Frame Assembly—Engine control stand	All	1
100-1	6-7370	Plate—Cover	All	1
2	55-5689-23	Plate—Cover	All	1
3	55-5689-22	Plate—Cover	All	1
4	3-10812	Cover—Control stand	All	2
5	3-10814	Cover—Control stand	All	1
6	3-10813-1	Cover—Control stand	All	1
7	21-9531-1	Housing Assembly—Bearing	All	2
	AN201K8A	Bearing—Metal shielded ball	All	1
	14-3002	Installation—Modified control	All	NP
8	NO NUMBER	Box—Control (Spec C24861) (Type A-6) GFE	All	1
9	6-10780	Cover Assembly—Control stand	All	1
10	6-14525	Plate Assembly—Control stand cover	All	1
11	43-11471	Plate Assembly—Control stand cover	All	1
12	43-11472	Plate Assembly—Control stand cover	All	1
13	59-1791-401	Cover Assembly—Control stand (see fig. 103)	All	1
14		Mixture Control Levers (see fig. 101)		
15		Throttle Levers and Propeller Lock (see fig. 102)		
16		Elevator Trim Tab Unit (see fig. 103)		
17		Engine Control Stand Lower Pulley Rack (see fig. 104)		
18	6-15229	Selector Assembly—Turbo (see fig. 119)	ZE	Ref

PUBLISHED BY AVIALOGS.COM

FUSELAGE

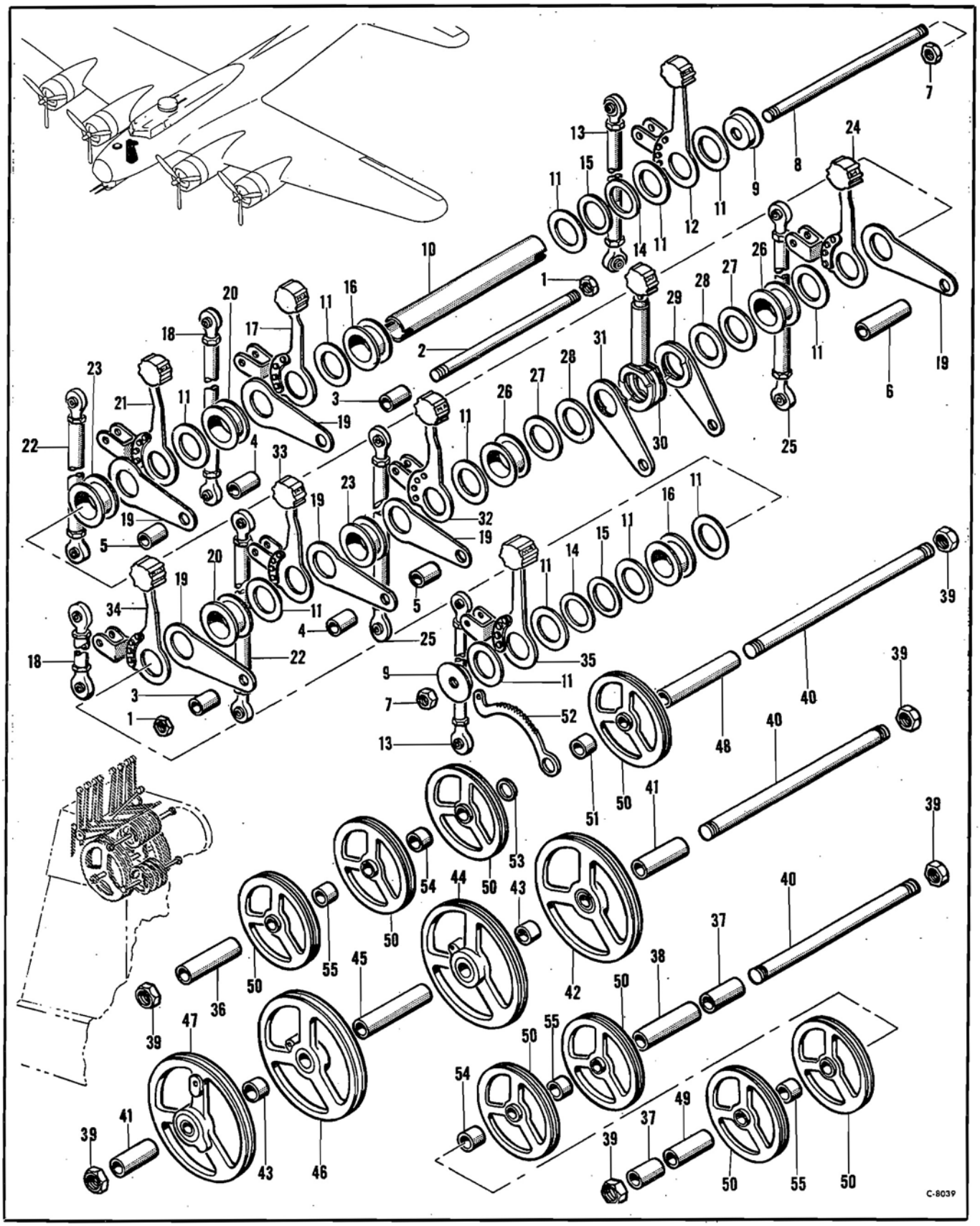

Figure 101—Control Stand Mixture Control Levers

PUBLISHED BY AVIALOGS.COM

FUSELAGE

Control Stand Mixture Control Levers

Figure & Index No.	Part Number	1 2 3 4 5 6 7 Nomenclature	Usage Code	Units Per Assy.
		Control Stand Mixture Control Levers (see fig. 100)		
101-1	AN365-428	Nut—Self-locking	All	2
2	51-196	Shaft—Engine control stand	All	1
3	51-195-77	Spacer—1-4 shaft	All	2
4	51-195-64	Spacer—1-4 shaft	All	2
5	51-195-55	Spacer—1-4 shaft	All	2
6	51-195-174	Spacer—1-4 shaft	E	1
7	AN365-624	Nut—Self-locking	All	2
8	51-200	Shaft—Engine control stand	All	1
9	51-249	Plug Assembly—Engine control stand	All	2
10	51-79	Shaft—Engine control stand	All	1
11	1-24239-3	Washer—Friction	All	12
12	3-11810-1	Lever Assembly (RH)	All	1
13	3-13001	Rod Assembly—Control	All	2
14	41-9732-4	Spacer—Engine control	All	2
15	1-24235-1	Washer—1-16 brass	All	2
16	41-9831-53	Spacer—Engine control lever	All	2
17	3-11811-1	Lever Assembly—RH	All	1
18	1-18089	Rod Assembly—Engine control	All	2
19	41-8700-4	Washer—Friction	All	6
20	41-9831-46	Spacer—Engine control lever	All	2
21	3-11812-1	Lever Assembly—RH	All	1
22	6-11058-30	Rod Assembly	T	2
	BAC1861-4-119	Rod Assembly	NG	1
23	41-9831-55	Spacer—Engine control lever	All	2
24	3-11813-1	Lever Assembly (RH)	All	1
25	6-11058-33	Rod Assembly	T	2
	BAC1861-4-180	Rod Assembly	NG	1
26	41-9831-43	Spacer—Engine control lever	All	2
27	1-24237-1	Washer—Laminated phenolic	All	2
28	1-24238-1	Shim—Brass washer	All	2
29	41-9736	Cam Assembly—Engine control lock	UB	2
	6-16818	Cam Assembly—Engine control lock	TN	1
30	41-7953-1	Handle Assembly—Engine control lock	E	1
	41-7953-4	Handle Assembly—Engine control lock	UE	1
	3-24687-1	Handle Assembly—Engine control lock	TN	1
31	41-9736-1	Cam Assembly—Engine control lock	E	1
32	3-11813	Lever Assembly—LH	E	1
33	3-11812	Lever Assembly—LH	E	1
34	3-11811	Lever Assembly—LH	E	1
35	3-11810	Lever Assembly—LH	E	1
	51-195-382	Spacer (Replaces Index No. 3, 4, 5 & 6 on LH side of control box)	ZE	1
	41-9831-272	Spacer (Replaces Index No. 16, 20, 23 & 26 on LH side of control box)	ZE	1
	41-9732-32	Spacer (Replaces Index No. 11, 14 & 15 on LH side of control box)	ZE	1
36	51-187-175	Spacer—1-2 shaft	All	1
37	51-197-60	Spacer—1-2 shaft	All	2
38	51-197-189	Spacer—1-2 shaft	All	1
39	AN365-820	Nut—Self-locking	All	6
40	1-24234-2	Stud—Engine control	All	3
41	51-197-42	Spacer—1-2 shaft	All	2
42	3-11130-12	Pulley Assembly—RH	All	1
43	51-197-12	Spacer—1-2 shaft	All	2
44	3-11624-9	Pulley Assembly—RH	All	1
45	51-197-284	Spacer—1-2 shaft	All	1
46	3-11624-8	Pulley Assembly—LH	All	1
47	3-11130-11	Pulley Assembly—LH	All	1
48	51-197-255	Spacer—1-2 shaft	All	1
49	51-197-109	Spacer—1-2 shaft	All	1
50	3-11002-6	Pulley Assembly—Engine control	All	8
51	51-197-10	Spacer—1-2 shaft	All	1
52	41-7964	Sector—Lock lever	All	1
53	AN960D816	Washer—Plain	All	1
54	51-197-18	Spacer—1-2 shaft	All	2
55	51-197-20	Spacer—1-2 shaft	All	3

PUBLISHED BY AVIALOGS.COM

FUSELAGE

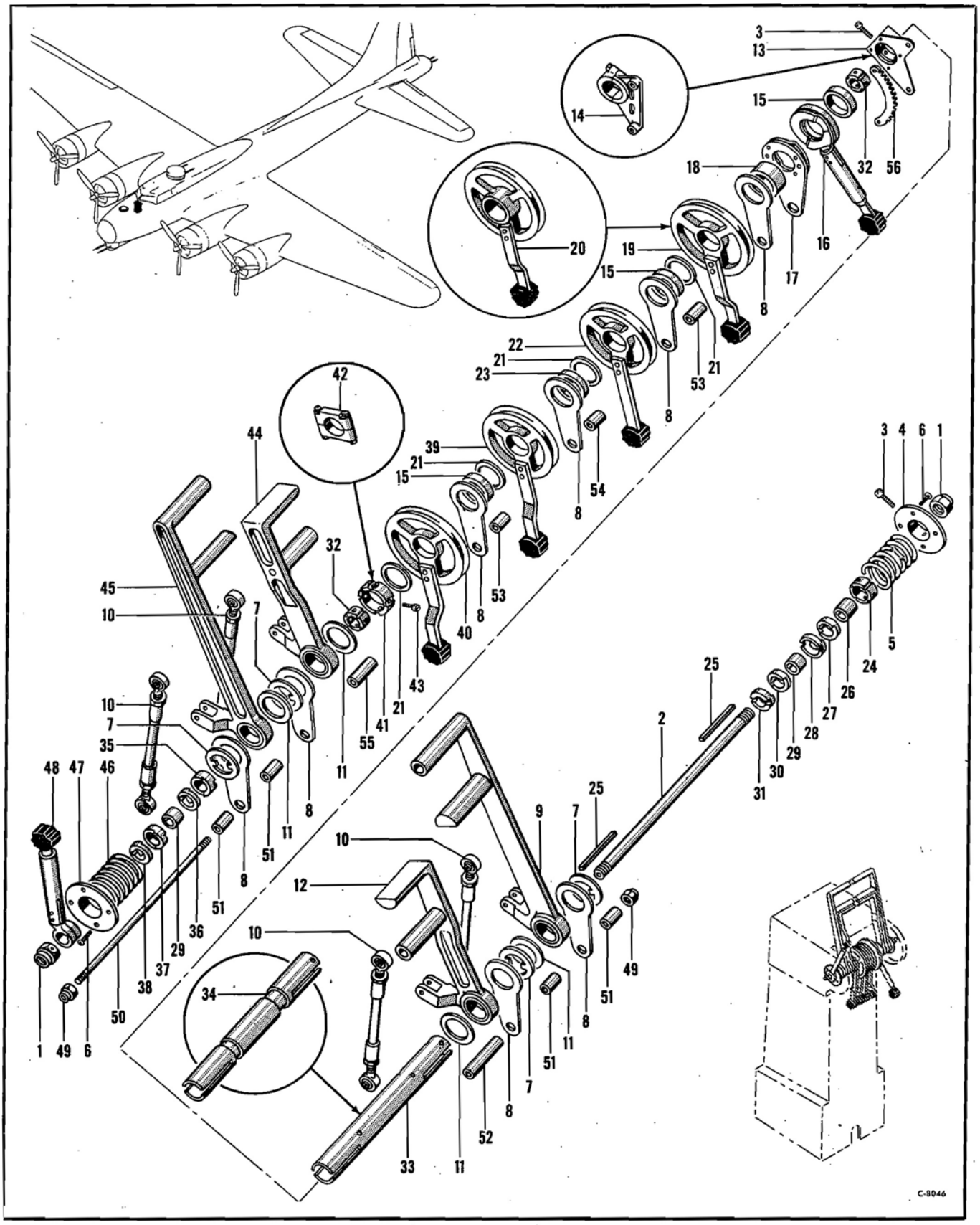

Figure 102—Throttle Levers and Propeller Lock

RESTRICTED
PUBLISHED BY AVIALOGS.COM

FUSELAGE

Throttle Levers and Propeller Lock

Figure & Index No.	Part Number	1 2 3 4 5 6 7 Nomenclature	Usage Code	Units Per Assy.
		Throttle Levers and Propeller Lock (see fig. 100)		
102-1	AN365-820	Nut—Self-locking	All	2
2	41-4293	Shaft—Throttle lock	All	1
3	AN502-416-6	Screw—Drilled fillister head machine	All	4
4	41-9728	Collar—Shaft support	HA	1
	3-24648	Collar—Shaft support	MI	1
5	51-329	Spring—Compression	All	1
6	AN526-1032R7	Screw—Truss head	All	8
7	21-9574	Washer—Special	All	4
8	41-8700-3	Washer—Friction	All	8
9	6-7595-1	Lever Assembly—Throttle control	All	1
10	3-15520-2	Rod Assembly—Control	All	4
11	1-24239-1	Washer—Friction	All	7
12	6-7593-1	Lever Assembly—Throttle control	All	1
13	41-8129-3	Support Assembly—Lock quadrant	HA	1
14	3-22272-1	Support Assembly—Lock quadrant	MI	1
15	41-9732-16	Spacer—Engine control	All	3
16	41-7953	Handle Assembly—Engine control lock	HA	1
	3-24687	Handle Assembly—Engine control lock	MI	1
17	41-9735	Cam Assembly—Engine control lock	HA	1
	6-16819	Cam Assembly—Engine control lock	MI	1
18	41-9732-30	Spacer—Engine control	HA	1
	41-9732-16	Spacer—Engine control	MI	1
19	3-11146-8	Pulley Assembly—Propeller pitch	XA	1
20	3-11146-11	Pulley Assembly—Propeller pitch	PK	1
21	1-24239-2	Washer—Friction	All	6
22	3-11147-8	Pulley Assembly—Propeller pitch	XA	1
	3-11147-10	Pulley Assembly—Propeller pitch	PK	1
23	41-9732-14	Spacer—Engine control	XA	1
24	1-16285-1	Guide—Shaft support	HA	1
	3-24647	Guide—Shaft support	MI	1
25	BAC1001-29	Key	All	2
26	41-4284	Spacer—Throttle lock	All	1
27	41-9730-3	Cam—Throttle lock	All	1
28	41-9731-2	Cam—Throttle lock	All	1
29	41-4284-1	Spacer—Throttle lock	All	2
30	41-9730	Cam—Throttle lock	All	1
31	41-9731-1	Cam—Throttle lock	All	1
32	1-16285	Guide—Shaft support	HA	2
33	41-4286-1	Shaft—Throttle support	HA	1
34	3-23975	Shaft—Throttle support	MI	1
35	41-9731	Cam—Throttle lock	All	1
36	41-9730-1	Cam—Throttle lock	All	1
37	41-9731-3	Cam—Throttle lock	All	1
38	41-9730-2	Cam—Throttle lock	All	1
39	3-11147-7	Pulley Assembly—Propeller pitch	XA	1
	3-11147-9	Pulley Assembly—Propeller pitch	PK	1
40	3-11146-7	Pulley Assembly—Propeller pitch	All	1
41	51-495	Spacer—Engine control	HA	1
42	3-22271	Spacer Assembly—Engine control	MI	1
43	AN502-416-8	Screw—Drilled fillister head machine	HA	4
44	6-7593	Lever Assembly—Throttle control	All	1
45	6-7595	Lever Assembly—Throttle control	All	1
46	51-474	Spring—Compression	All	1
47	41-9728-1	Collar—Shaft support	All	1
48	41-8126	Lever Assembly—Throttle lock	All	1
49	AN365-428	Nut—Self-locking	All	2
50	41-196	Shaft—Engine control stand	All	1
51	51-195-48	Spacer—Engine control	HA	4
52	51-195-148	Spacer—Engine control	HA	1
	51-195-252	Spacer—Engine control (replaces index no. 51 and 52)	MI	1
53	51-195-40	Spacer—Engine control	All	2
54	55-195-38	Spacer—Engine control	HA	1
	55-195-39	Spacer—Engine control	MI	1
55	51-195-93	Spacer—Engine control	HA	1
	51-195-197	Spacer—Engine control (replaces index no. 51 and 55)	MI	1
56	41-6818	Quadrant—Control lock	All	1

PUBLISHED BY AVIALOGS.COM

FUSELAGE

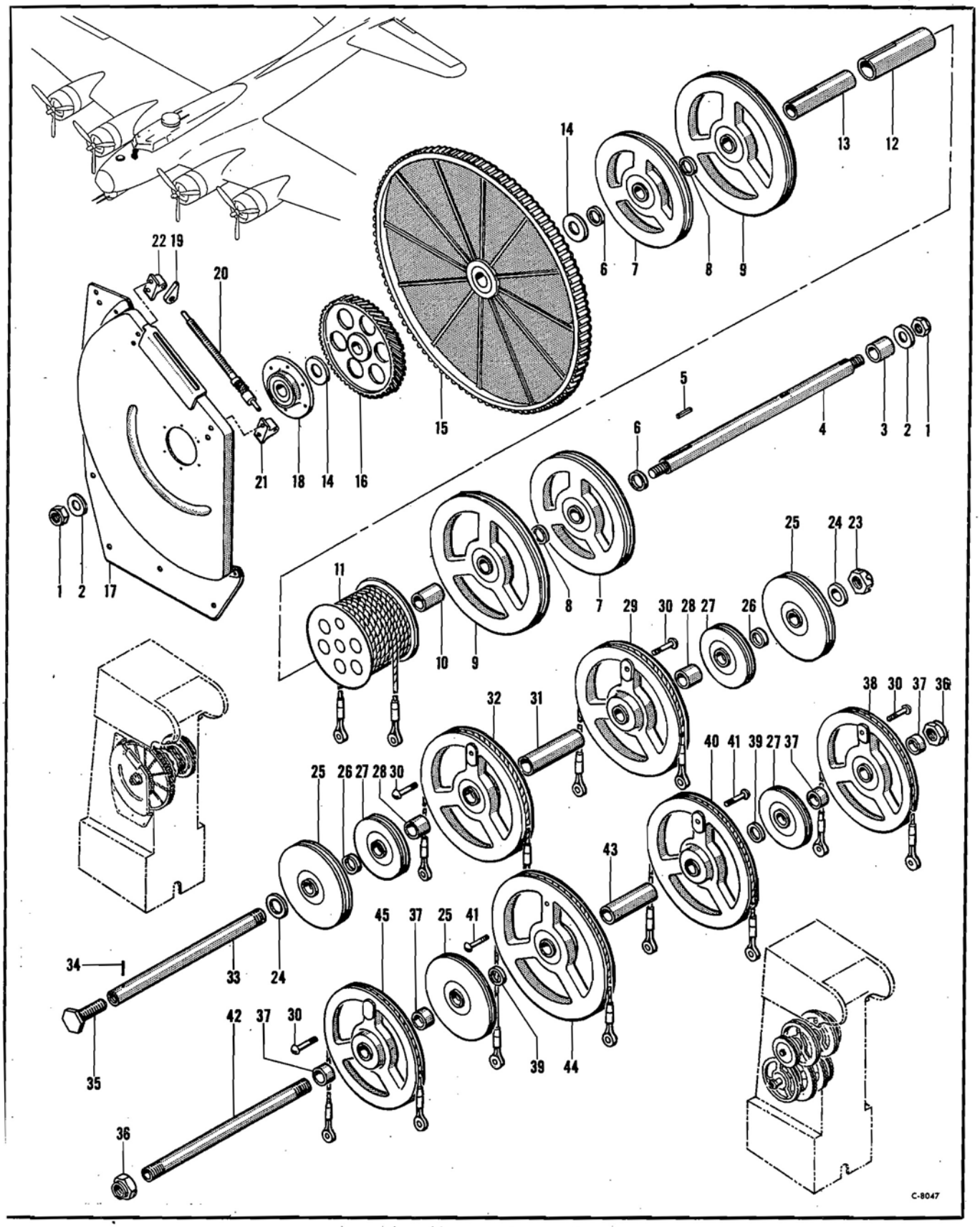

Figure 103—Elevator Trim Tab Unit

PUBLISHED BY AVIALOGS.COM

FUSELAGE

Elevator Trim Tab Unit

Figure & Index No.	Part Number	1 2 3 4 5 6 7 Nomenclature	Usage Code	Units Per Assy.
		Elevator Trim Tab Unit (see fig. 100)		
103-1	AN365-428	Nut—Self-locking	All	2
2	1-22928-5	Washer—Steel	All	2
3	BAC1608-40	Spacer	All	1
4	41-8074	Shaft—Elevator tab control	All	1
5	BAC1001-12	Key	All	1
6	51-197-6	Spacer—Engine control	All	2
7	3-11002-2	Pulley Assembly—Engine control	All	2
8	51-197-8	Spacer—Engine control	All	2
9	3-11002	Pulley Assembly—Engine control	All	2
10	51-197-40	Spacer—Engine control	All	1
11	41-7654-2	Drum Assembly—Elevator tab control	All	1
12	51-202	Tube—Guard	All	1
13	51-201	Spacer—Half shaft	All	1
14	AN960-816	Washer—Plain	All	2
15	46-4913	Wheel Assembly—Elevator tab control	All	1
16	21-9533	Gear—Elevator tab control	All	1
	59-1791-401	Cover Assembly—Control stand	All	1
17	59-1791-403	Plate Assembly—Control stand	All	1
18	21-9531-1	Housing Assembly—Bearing	All	1
	AN201K8A	Bearing—Metal shielded ball	All	1
19	41-9514	Pointer—Tab control	All	1
20	21-5943	Shaft Assembly—Tab control	All	1
21	41-9774	Bearing Assembly—Tab control	All	1
22	41-9774-2	Bearing Assembly—Tab control	All	1
23	AN320-8	Nut—Aircraft shear	All	1
24	1-22959-2	Washer—Retaining	All	2
25	3-11002-4	Pulley Assembly—Engine control	All	3
26	51-197-5	Spacer—Engine control	All	2
27	3-11002-8	Pulley Assembly—Engine control	All	3
28	51-197-47	Spacer—Engine control	All	2
29	3-11133-19	Pulley Assembly—Engine control	All	1
30	AN23-21	Bolt—Clevis	All	4
31	51-197-152	Spacer—Engine control	E	1
	51-197-247	Spacer—Engine control	ZE	1
32	3-11133-18	Pulley Assembly—Engine control	E	1
	41-7915-3	Bolt Assembly—Engine control	All	1
33	41-7915-1	Shank—Bolt assembly	All	1
34	41-7915-2	Pin—Bolt assembly	All	1
35	41-9822	Screw—Special	All	1
36	AN365-820	Nut—Self-locking	All	2
37	51-197-22	Spacer—Engine control	All	4
38	3-11133-20	Pulley Assembly—Engine control	All	1
39	51-197-10	Spacer—Engine control	All	2
40	3-11138-8	Pulley Assembly—Engine control	All	1
41	AN23-20	Bolt—Clevis	All	2
42	1-24234-1	Stud	All	1
43	51-197-88	Spacer—Engine control	E	1
	51-197-262	Spacer—Engine control	ZE	1
44	3-11138-9	Pulley Assembly—Engine control	E	1
45	3-11133-21	Pulley Assembly—Engine control	E	1

PUBLISHED BY AVIALOGS.COM

FUSELAGE

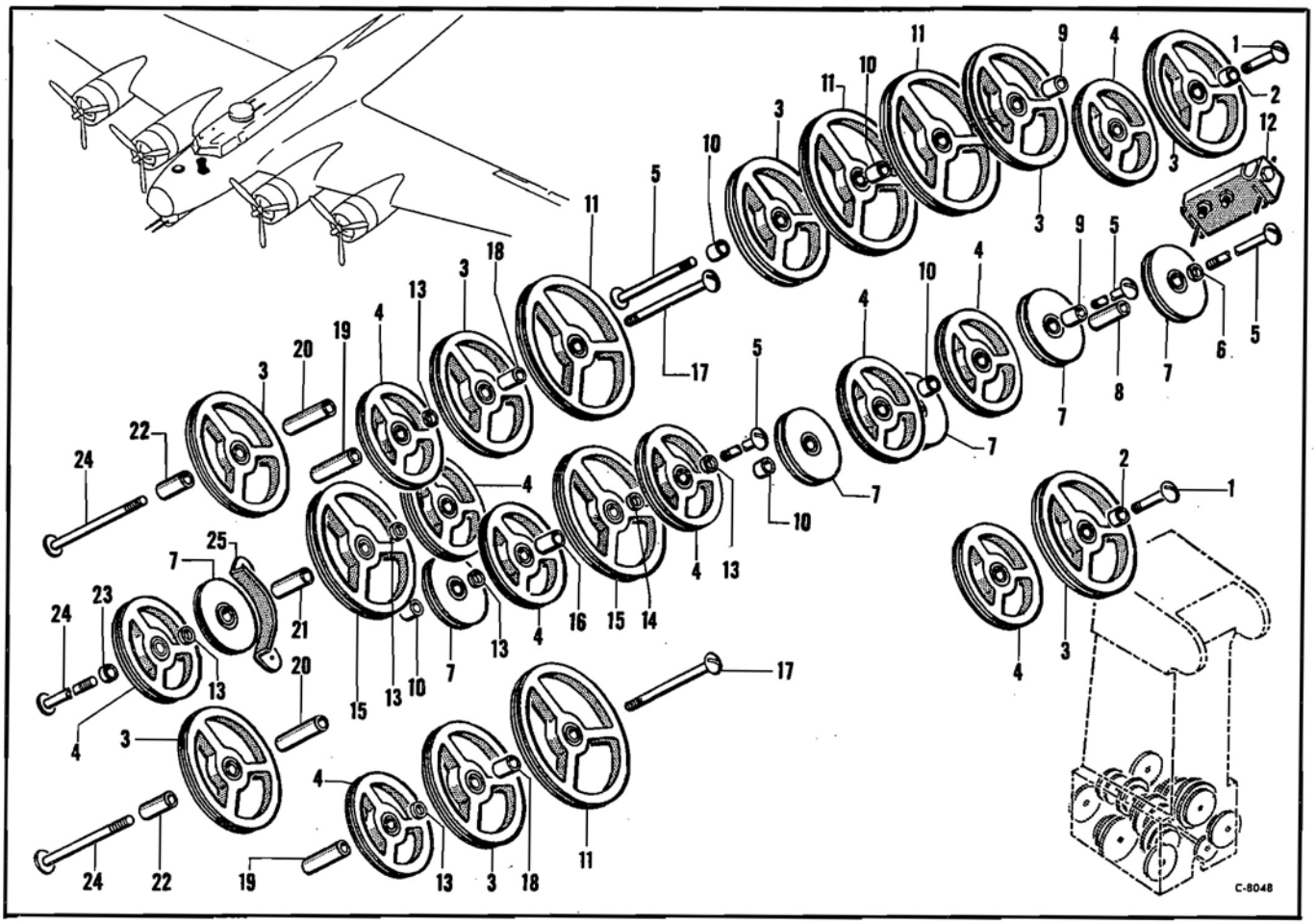

Figure 104—Engine Control Stand Lower Pulley Rack

Engine Control Stand Lower Pulley Rack

Figure & Index No.	*Part Number*	*1 2 3 4 5 6 7 Nomenclature*	*Usage Code*	*Units Per Assy.*
		Engine Control Stand Lower Pulley Rack (see fig. 100)		
104-1	AN26-24	Bolt—Clevis	All	2
2	51-199-18	Spacer	All	2
3	3-11003-4	Pulley Assembly	All	8
4	3-11003-6	Pulley Assembly	All	10
5	AN26-52	Bolt—Clevis	All	4
6	51-198-6	Spacer	All	1
7	3-11003-8	Pulley Assembly	All	6
8	51-199-128	Spacer	All	1
9	51-199-34	Spacer	All	2
10	51-199-28	Spacer	All	5
11	3-11003	Pulley Assembly	All	4
12	3-18288	Fairlead Assembly	IA	1
13	51-199-8	Spacer	All	6
14	51-199-10	Spacer	E	1
15	3-11003-2	Pulley	E	2
16	51-199-44	Spacer	E	1
	51-199-102	Spacer	ZE	1
17	AN26-60	Bolt—Clevis	All	2
18	51-199-40	Spacer	All	2
19	51-199-96	Spacer	All	2
20	51-199-104	Spacer	All	2
21	51-199-76	Spacer	E	1
	51-199-104	Spacer	ZE	1
22	51-199-64	Spacer	All	2
23	51-199-12	Spacer	E	1
	51-199-40	Spacer	All	1
24	AN26-54	Bolt—Clevis	All	3
25	41-8510-1	Guard	All	1

PUBLISHED BY AVIALOGS.COM

FUSELAGE

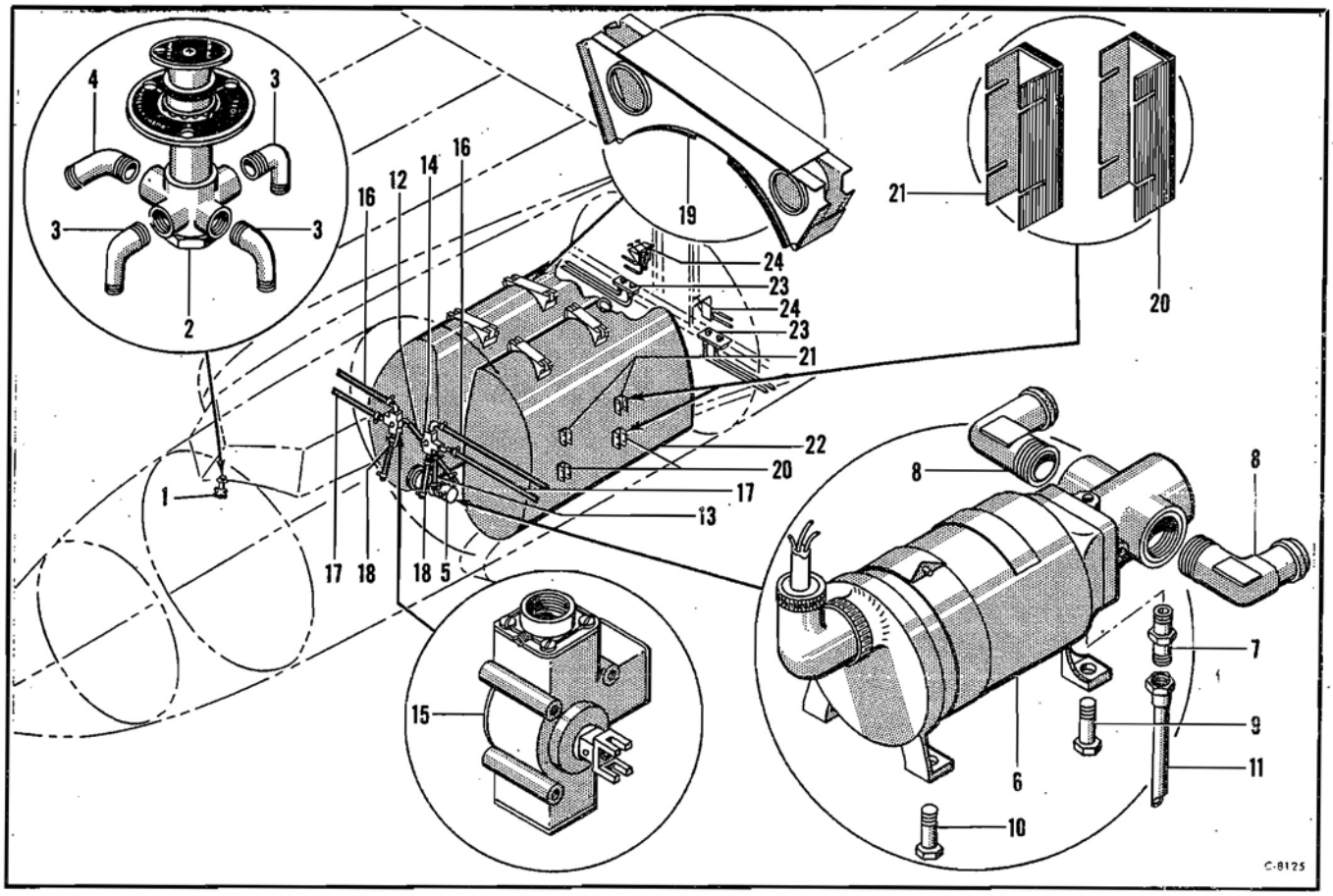

Figure 105—Fuel System

Fuel System

Figure & Index No.	Part Number	1 2 3 4 5 6 7 Nomenclature	Usage Code	Units Per Assy.
		Fuel System		
	15-9471	Installation—Fuel tubing	All	NP
105-1	15-9471-1	Primer Assembly—Fuel	All	1
2	401-4A	Primer Assembly—4 engine fuel (Parker) (Spec 95-28136) (see AN03-10-33)	All	1
3	811CT4	Elbow	All	4
4	811CT45-4	Elbow—45 degree	All	1
5	9-3668	Installation—Fuel transfer pump	All	NP
	9-3668-7	Unit Assembly—Pump	All	1
6	RG4430-2	Pump Assembly—Fuel transfer (Romec)	All	1
7	811FT4	Nipple	All	1
8	AN842-16	Elbow—90 degree hose	All	2
9	AN4-12A	Bolt—Aircraft	All	2
10	AN4-13A	Bolt—Aircraft	All	2
	AN365-428	Nut—Self-locking	All	4
11	15-7348-112	Tube Assembly (drain)	All	1
12	15-7348-4	Hose	All	1
13	15-7348-5	Hose	All	1
14	9-3663	Installation—Fuel transfer selector valve (LH) (see fig. 106)	All	NP
15	9-3663-1	Installation—Fuel transfer selector valve (RH) (see fig. 106)	All	NP
16	15-7348-3	Hose (see fig 23)	ZA	Ref
	15-9471-39	Hose (see fig. 23)	VK	Ref
17	15-7348-122	Hose (see fig. 23)	All	Ref
	9-3746	Installation—Auxiliary tank port plug (LH)	All	NP
	9-3746-1	Installation—Auxiliary tank port plug (RH)	All	NP
18	9-3746-2	Plug Assembly—Auxiliary tank port (install on 9-3663 & 9-3663-1 transfer valves—index 14 & 15—when auxiliary bomb bay fuel tanks are removed)	All	2
	75-7336	Installation—Auxiliary fuel tank	XA	NP
	79-2220	Installation—Extra fuel tank cradle (LH)	All	NP
	79-2220-1	Installation—Extra fuel tank cradle (RH)	All	NP
19	79-2220-703	Cradle Assembly—Extra fuel tank	All	2
	AN3-21A	Bolt—Aircraft	All	4
	AN3-23A	Bolt—Aircraft	All	4
20	1-21031	Pad Assembly—Auxiliary fuel tank	All	12
21	1-21032	Pad Assembly—Auxiliary fuel tank	All	4
22	75-7336-620	Kit Assembly—Auxiliary fuel tank (see fig. 106)	XA	1
23	A855KX	Valve Assembly—Transfer control (Denison) GFE (see fig. 21)	D	Ref
	A855NX	Valve Assembly—Transfer control (Denison) GFE (see fig. 21)	EE	Ref
24	A855RX	Valve Assembly—Transfer control (Denison) GFE (see fig. 21)	PJ	Ref

PUBLISHED BY AVIALOGS.COM

FUSELAGE

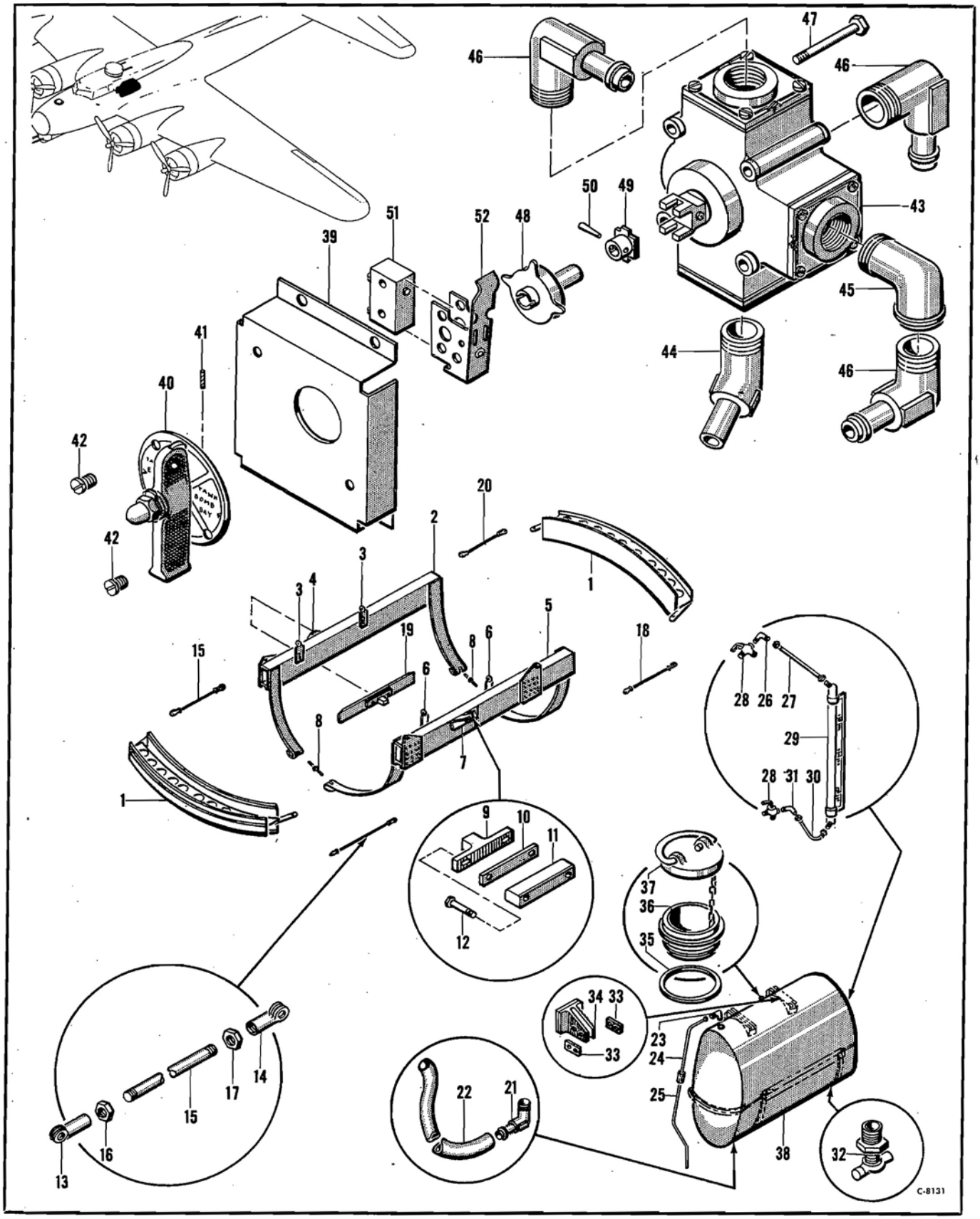

Figure 106—Auxiliary Fuel Tank Kit Assembly and Fuel Transfer Selector Valve

PUBLISHED BY AVIALOGS.COM

FUSELAGE

Auxiliary Fuel Tank Kit Assy. & Fuel Transfer Selector Valve

Figure & Index No.	Part Number	1 2 3 4 5 6 7 Nomenclature	Usage Code	Units Per Assy.
		Auxiliary Fuel Tank Kit Assembly & Fuel Transfer Selector Valve		
	75-7336-620	Auxiliary Fuel Tank Kit Assembly (see fig. 105)	XA	Ref
106-1	6-11582	Beam Assembly—Tank	XA	4
	755-26-8-8	Clamp—Cushioned (Adel)	XA	2
	755-8-2-8	Clamp—Cushioned (Adel)	XA	2
	AN520-10R10	Screw—Round head	XA	2
	AN365-1032	Nut—Self-locking	XA	2
2	9-3731-1	Beam Assembly—Inboard (LH)	XA	1
	9-3731	Beam Assembly—Inboard (RH)	XA	1
3	1-18540	Lug—Tank support	XA	2
4	3-14248	Fitting—Auxiliary fuel tank	XA	1
	3-12062-38	Cushion Assembly—Tank support	XA	2
	3-15193	Strap Assembly—Tank support	XA	2
	AN4-16A	Bolt—Aircraft	XA	14
	AN365-428	Nut—Self-locking	XA	12
5	9-3732	Beam Assembly—Outboard (LH)	XA	1
	9-3732-1	Beam Assembly—Outboard (RH)	XA	1
6	1-18540	Lug—Tank support	XA	2
7	3-14247	Fitting—Auxiliary fuel tank	XA	1
	3-12062-40	Cushion Assembly—Tank support	XA	2
	3-15193-1	Strap Assembly—Tank support	XA	2
	AN4-16A	Bolt—Aircraft	XA	4
	AN365-428	Nut—Self-locking	XA	12
8	1-24217	Rod—Tie	XA	4
9	1-17552	Stop—Auxiliary fuel tank	XA	2
10	1-17554	Plate—Auxiliary fuel tank	XA	2
11	1-21033	Block—Auxiliary fuel tank	XA	2
	AN4-20A	Bolt—Aircraft	XA	8
	AN960-416	Washer—Plain	XA	8
	AN365-428	Nut—Self-locking	XA	8
12	AN4-20A	Bolt—Aircraft	XA	4
13	AN665-46L	Terminal—Clevis type	XA	8
14	AN665-46R	Terminal—Clevis type	XA	8
	AN395-17	Pin—Flat head	XA	6
15	AN705-17	Tie Rod—Internal	XA	4
16	AN315-5L	Nut—Aircraft plain	XA	8
17	AN315-5R	Nut—Aircraft plain	XA	8
18	AN705-2175	Tie Rod—Internal	XA	2
19	3-14245	Support Assembly—Auxiliary fuel tank	XA	2
	3-14245-1	Support	XA	1
	1-17552	Stop—Auxiliary fuel tank	XA	1
	1-17554	Plate—Auxiliary fuel tank	XA	1
	AN4-10A	Bolt—Aircraft	XA	2
	AN365-428	Nut—Self-locking	XA	2
	AN3-5A	Bolt—Aircraft	XA	4
	AN365-1032	Nut—Self-locking	XA	4
20	AN705-2525	Tie Rod—Internal	XA	2
21	15-7336-1	Elbow—90 degree	XA	2
22	15-7336-10	Hose—Feed	XA	2
	AN748-56	Clamp—Hose	XA	4
23	811CT8	Elbow—90 degree	XA	2
24	75-7336-616	Tube (LH vent)	XA	1
	75-7336-618	Tube (RH vent)	XA	1
	AN884-8-14	Hose—Resistant synthetic	XA	2
	AN748-30	Clamp—Hose	XA	4
25	75-7336-617	Tube (LH vent)	XA	1
	75-7336-619	Tube (RH vent)	XA	1
26	811CT5	Elbow—90 degree	XA	2
27	75-7336-606	Tube Assembly	XA	2
	811BT5D	Nut	XA	2
	811T5CS	Sleeve	XA	2
28	765-1	Cock—Shut off	XA	4
29	3-16114-5	Gage Assembly—Bomb bay fuel (LH)	XA	1
	3-16114-6	Gage Assembly—Bomb bay fuel (RH)	XA	1
	3-16114-4	Marker Assembly	XA	1
	3-16114-3	Marker Assembly	XA	1
	1-14068	Cap—Upper shell end	XA	2
	1-27743	Gage—Auxiliary fuel sight	XA	1
	41-9863	Gasket—End cap	XA	2
	AN365-1032	Nut—Self-locking	XA	2
	AN520-10-8	Screw—Round head	XA	2
	811FT5	Nipple	XA	2
	AN365-1032	Nut—Self-locking	XA	12
	AN520-10R8	Screw—Round head	XA	8
	BAC540-10	Clamp—Loop type	XA	4
	15-7336-11	Angle	XA	2
	AN520-10R10	Screw—Round head	XA	4

PUBLISHED BY AVIALOGS.COM

FUSELAGE

Auxiliary Fuel Tank Kit Assy. & Fuel Transfer Selector Valve

Figure & Index No.	Part Number	1 2 3 4 5 6 7 Nomenclature	Usage Code	Units Per Assy.
106-30	75-7336-600	Tube Assembly	XA	2
31	811CT45-5	Elbow—45 degree	XA	2
32	AN771-2	Cock—Screw type drain	XA	2
	AN906-16	Plug—Square head	XA	2
	AN900-16	Gasket—Annular copper	XA	2
33	1-17555	Plate—Auxiliary fuel tank	XA	8
	AN3-10A	Bolt—Aircraft	XA	8
	AN365-1032	Nut—Self-locking	XA	8
34	1-17553	Stop Assembly—Auxiliary fuel tank	XA	4
35	3-16478	Ring Assembly—Bonding	XA	2
36	3-13613-12	Nut Assembly—Tank filler unit	XA	2
37	3-13806-11	Cap Assembly—Filler unit	XA	2
	1-28392	Spring	XA	1
	1-18569-1	Gasket	XA	1
	3-16112-6	Cap	B	1
	3-20755-5	Cap	BE	1
38	2F1-6-1778	Tank Assembly (Goodyear)	XA	1
	2F6-1778-1	Tank Assembly (Goodyear)	XA	1
	9-3663	Installation—Fuel transfer selector valve (LH) (see fig. 105)	All	NP
	9-3663-1	Installation—Fuel transfer selector valve (RH) (see fig. 105)	All	NP
	6-9374-1	Bracket Assembly—Selector valve control support (LH)	All	1
	6-9374-2	Bracket Assembly—Selector valve control support (RH)	All	1
39	3-13663	Bracket—Selector valve control support	All	1
	1-18756-1	Handle Assembly—Selector valve control (LH)	All	1
	1-18756-2	Handle Assembly—Selector valve control (RH)	All	1
40	U4218-1	Dial and Handle Assembly (United Aircraft)	All	1
	U4216-1	Dial and Handle Assembly (United Aircraft)	All	1
41	1-18866	Screw—Headless drive	All	1
42	AN505-8R8	Screw—82 degree flat head	All	2
	AN520-10R6	Screw—Round head	All	5
	AN365-1032	Nut—Self-locking	All	5
	9-3663-11	Valve Assembly—LH selector	All	1
	9-3663-12	Valve Assembly—RH selector	All	1
43	940167	Valve—Fuel transfer selector (type PG-4) (Aero Supply) (see ANO3-10-39)	All	1
44	9-3663-7	Elbow—Hose (make from AN844-16 elbow)	All	1
45	AN914-6	Elbow—90 degree internal and external	All	1
46	AN842-16	Elbow—90 degree hose	All	3
47	AN3-32A	Bolt—Aircraft	All	4
	9-3663-13	Adapter Assembly—LH selector valve	All	1
	9-3663-14	Adapter Assembly—RH selector valve	All	1
48	1-18865	Adapter—Selector valve control	All	1
49	066650	Driver—Fuel cock control yoke	All	1
50	385-20-5	Pin—Taper	All	1
	9-3663-15	Switch Assembly—LH selector valve	All	1
	9-3663-16	Switch Assembly—RH selector valve	All	1
	9-3663-10	Switch Assembly—Selector valve	All	1
51	AN3210-1	Switch—Low travel limit	All	1
52	9-10831	Switch (Micro Switch)	All	1
	AN515-6R20	Screw—Round head	All	2
	AN365-632	Nut—Self-locking	All	2

RESTRICTED
PUBLISHED BY AVIALOGS.COM

FUSELAGE

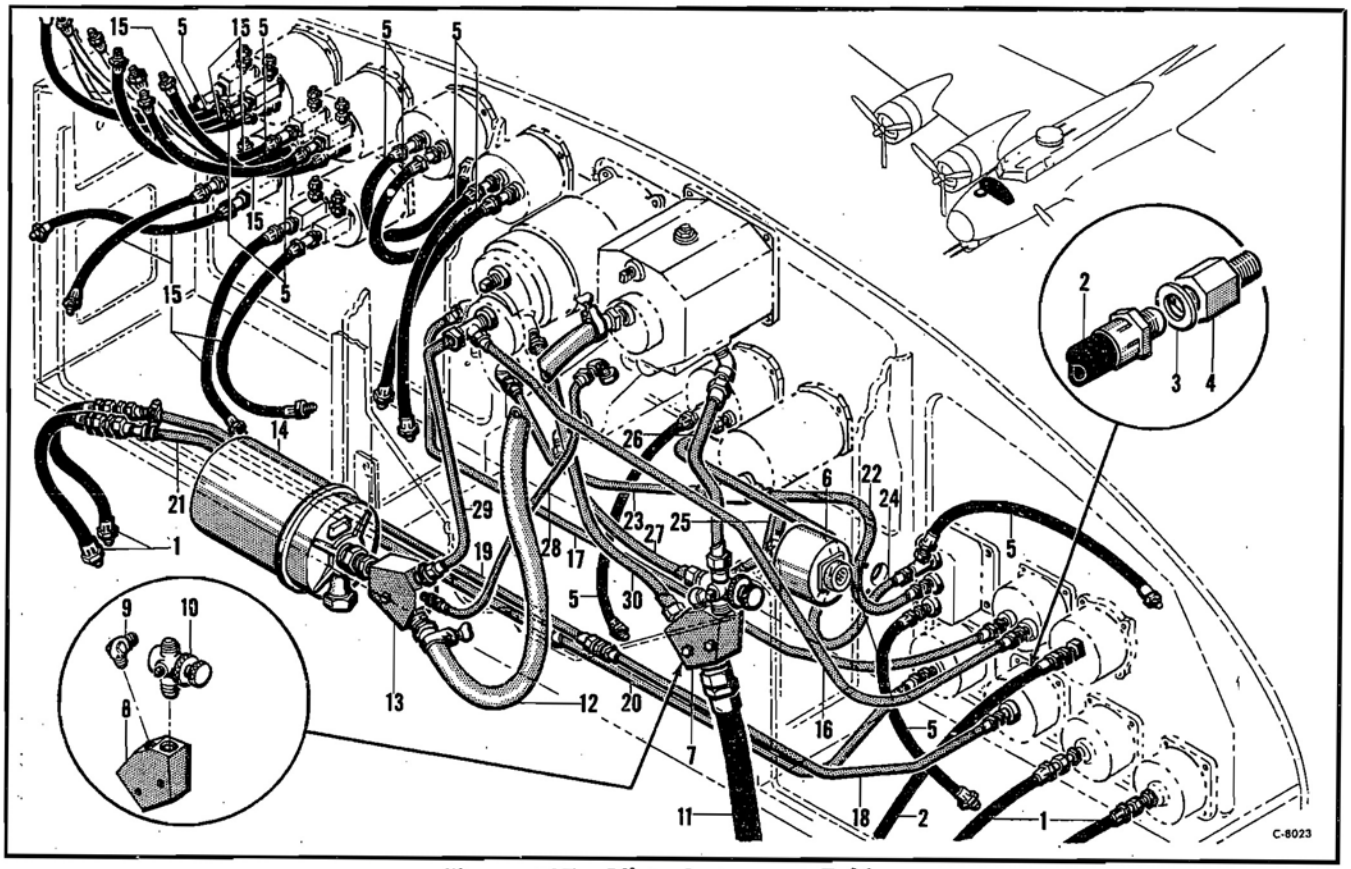

Figure 107—Pilots Instrument Tubing

Pilots Instrument Tubing

Figure & Index No.	*Part Number*	*1 2 3 4 5 6 7 Nomenclature*	*Usage Code*	*Units Per Assy.*
	65-7590	Installation—Pilots instrument tubing (see fig. 108)	All	NP
107-1	42D19277-5-14	Hose Assembly—Oxygen	All	4
2	43D2475-4-140	Hose Assembly	LD	1
	43D2474-4-140	Hose Assembly	VF	1
3	40B887-014C022-8	Gasket	N	1
4	39B846B4	Adapter	N	1
5	39B3481-414	Hose—Flexible	All	11
6	3112A	Switch Assembly—Vacuum warning (Pioneer)	All	1
7	65-7590-527	Manifold Assembly	All	1
8	3-13662	Manifold	All	1
9	3-19509	Elbow Assembly	All	1
10	38A6133	Valve Assembly	All	1
	38A6136	Needle	All	1
	38A6135	Nut	All	1
	38A6134	Body—Instrument	All	1
11	39B3481-1016	Hose—Flexible	All	1
12	AN884-6-84	Hose—Aromatic resistant synthetic	All	1
	65-7590-543	Manifold Assembly	All	1
13	3-13662	Manifold	All	1
14	AN5822-1	Filter—Air GFE	All	1
15	AN855A2A	Hose Assembly—Low pressure	All	8
16	65-7590-544	Tube	All	1
17	65-7590-500	Tube	All	1
18	65-7590-534	Tube	All	1
19	65-7590-525	Tube	All	1
20	65-7590-535	Tube	All	1
21	65-7590-512	Tube	All	1
22	65-7590-502	Tube	All	1
23	65-7590-503	Tube	All	1
24	65-7590-517	Tube	All	1
25	65-7590-538	Tube	All	1
26	65-7590-514	Tube	All	1
27	15-7590-4	Tube	All	1
28	65-7590-508	Tube	All	1
29	65-7590-532	Tube	All	1
30	15-7590-8	Tube	All	1

PUBLISHED BY AVIALOGS.COM

FUSELAGE

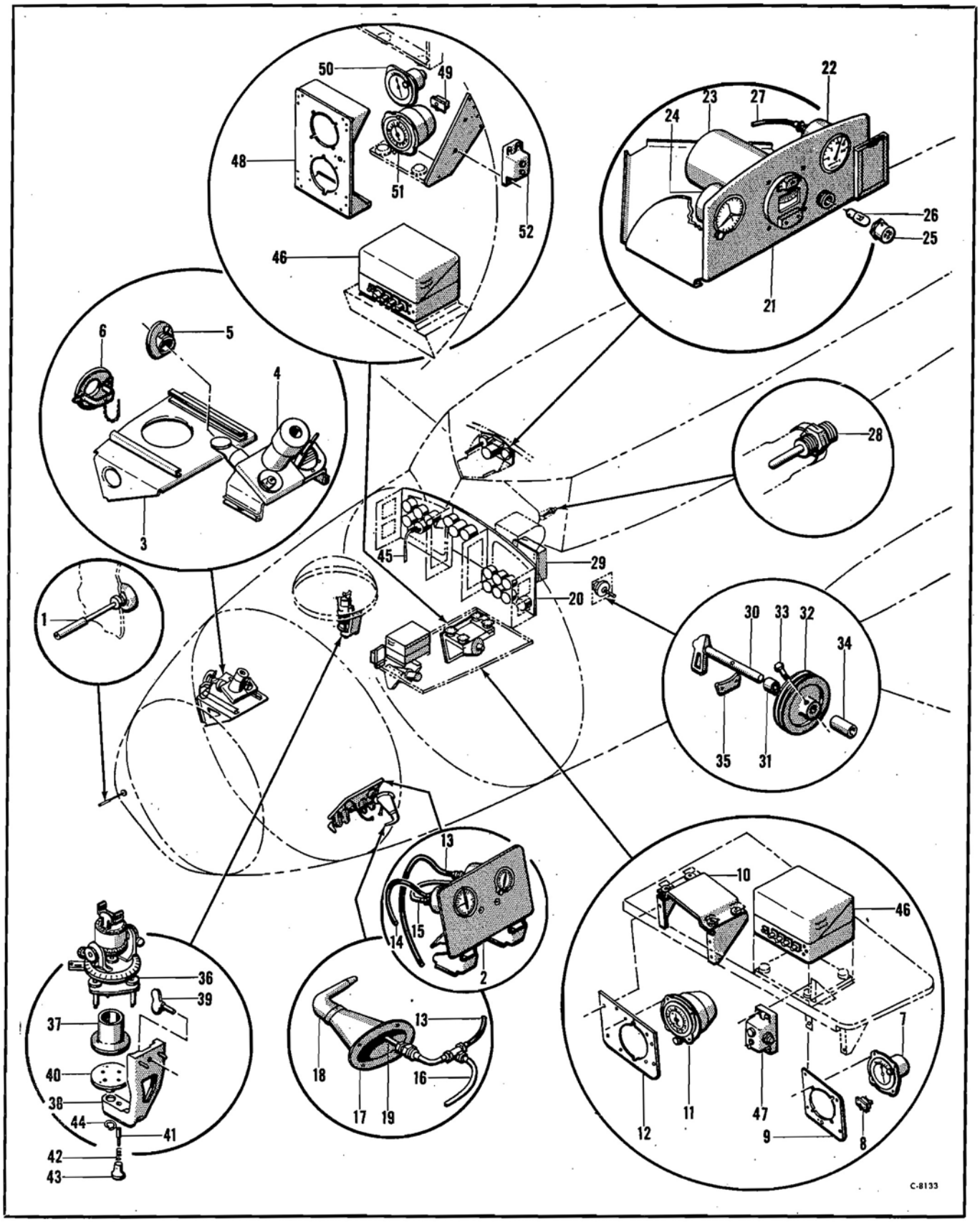

Figure 108—Instrument Equipment

PUBLISHED BY AVIALOGS.COM

FUSELAGE

Instrument Equipment

Figure & Index No.	Part Number	1 2 3 4 5 6 7 Nomenclature	Usage Code	Units Per Assy.
		Instrument Equipment		
	6-13918	Installation—Thermometer	All	NP
108-1	NO NUMBER	Thermometer (Spec 94-27328A) (Type C13A) GFE	All	1
2	84-1611	Installation—Bombers instrument panel (see fig. 116)	All	NP
	9-5023	Installation—Navigator drift recorder	All	NP
3	15-10991-3	Support Assembly—Drift recorder	QB	1
	15-10991-5	Support Assembly—Drift recorder	XM	1
4	NO NUMBER	Recorder—Drift GFE	All	1
5	6-11483	Adapter Assembly—Drift recorder outlet	All	1
	9-5894	Installation—Drift recorder cover	All	NP
6	6-13943	Cover Assembly—Drift recorder	All	1
	3-20245	Gasket—Cover	All	1
	9-5895	Installation—Navigators instruments	TA	NP
	9-5895-1	Panel Assembly	TA	1
7	NO NUMBER	Indicator—Radio compass (SC-D-3255) (Type I82A) GFE	TA	1
8	AN3022-2B	Switch—Single pole toggle	TA	1
9	6-13942	Panel Assembly—Radio compass	TA	1
	9-5077	Panel Assembly—Navigator compass	TA	1
10	9-5077-3	Bracket Assembly	TA	1
	AN8008-3	Insulator—Vibration	TA	4
11	12001-0	Indicator—Master GFE	TA	1
12	6-11476	Panel—Navigator compass	TA	1
	55-7575	Installation—Navigator instrument tubing	All	NP
13	39B3481-414	Hose	All	1
14	39B3480-414	Hose	All	1
15	15-7575-32	Tube	All	1
16	55-7575-451	Tube	All	1
	9-6784	Installation—Pitot head mast	All	NP
	9-6784-7	Mast Assembly	TA	1
	9-6784-1	Mast Assembly	DK	1
17	9-6783	Mast Assembly—Pitot head	All	1
18	NO NUMBER	Tube—Airspeed (Spec 94-27389) (Type G-2) GFE	All	1
19	9-6784-2	Tube Assembly	All	1
20	65-7380-514	Installation—Pilots and co-pilots instrument board (see fig. 109)	All	NP
	74-1174-606	Installation—Pilots compass panel	All	NP
21	74-1174-600	Panel Assembly	All	1
22	AN5771-3A	Gage—Single pressure (de-icer) GFE	BC	1
	AN5771-4A	Gage—Single pressure (hydraulic) GFE	NO	1
23	NO NUMBER	Compass (Spec 94-27807) (Type B-16) GFE	All	1
24	NO NUMBER	Clock (Spec 94-27970) (Type A-11) GFE	All	1
25	109S	Lamp Assembly (red) (Korry Mfg. Co.)	NO	1
26	AN3121-313	Lamp—T3 1-4 single-contact GFE	NO	1
27	39B3481-414	Hose Assembly	NO	1
	AN6260-4-12	Hose Assembly—Braided hydraulic	NO	1
	6-9402-1	Installation—Outside air thermometer (RH)	All	NP
28	AN5525-1	Bulb—Electrical resistance GFE	All	1
29	14-3002	Installation—Modified A.F.C.E. control (see fig. 100)	All	NP
	6-9205	Installation—Instrument vacuum control	All	NP
	6-9336	Installation—Instrument vacuum control	All	NP
30	6-9336-1	Handle Assembly	All	1
	066654	Handle	All	1
	1-18845-5-90	Shaft	All	1
31	BAC1608-44	Spacer—1-2 bolt	All	1
32	1-18246	Drum—Valve control	All	1
33	AN3-14A	Bolt—Aircraft	All	1
34	BAC1608-135	Spacer—1-2 bolt	All	1
35	3-29934	Guard—Control handle	XM	1
	9-5011	Installation—Astrocompass	All	NP
36	6A1174	Astrocompass (Mark II 106A1088) GFE	All	1
37	6A0-366	Standard—Astrocompass (Type 0-5A 106A1017) GFE	All	1
	6-12417	Support Assembly—Astrocompass bracket	All	1
38	6-12406	Support—Astrocompass bracket	All	1
	3-16708-2	Pin	All	2
39	3-18944	Stud—Astrocompass bracket	All	1
	RWP7	Pin—Cross (Shakeproof)	All	1
40	3-16171	Mount—Astrocompass bracket	All	1
41	3-18924	Plunger—Astrocompass bracket	All	1
42	1-24263	Spring—Astrocompass bracket	All	1
43	3-18228	Knob—Astrocompass bracket	All	1
44	3-18216	Spring—Astrocompass bracket	All	1
45	65-7590	Installation—Pilots instruments tubing (see fig. 107)	All	NP
	15-10429	Installation—Remote reading compass equipment	All	NP
	6-14193	Installation—Remote compass amplifier and switch	TA	NP
	9-7527	Installation—Remote compass amplifier	YJ	NP
	9-8940	Installation—Remote compass amplifier	HM	NP
46	12003-1	Amplifier GFE	All	1
47	CQ1	Switch GFE	TA	1
	15-13874	Installation—Navigators instruments	DK	NP
	15-13874-3	Panel Assembly	AK	1
	15-13874-6	Panel Assembly	EN	1
48	6-16982	Panel Assembly—Navigators instruments	AK	1
	6-16982-1	Panel Assembly—Navigators instruments	EN	1
49	AN3022-2B	Switch—Single pole toggle	AK	1
50	NO NUMBER	Indicator—Radio compass (Type I-82) GFE	All	1
51	AN5752-1	Indicator—Gyro flux gate compass master GFE	All	1
	15-13874-2	Bracket Assembly	BK	1
52	AN5756-1	Switch Box—Gyro flux gate compass caging GFE	XJ	1
	AN5756-2	Switch Box—Gyro flux gate compass caging GFE	BL	1

PUBLISHED BY AVIALOGS.COM

FUSELAGE

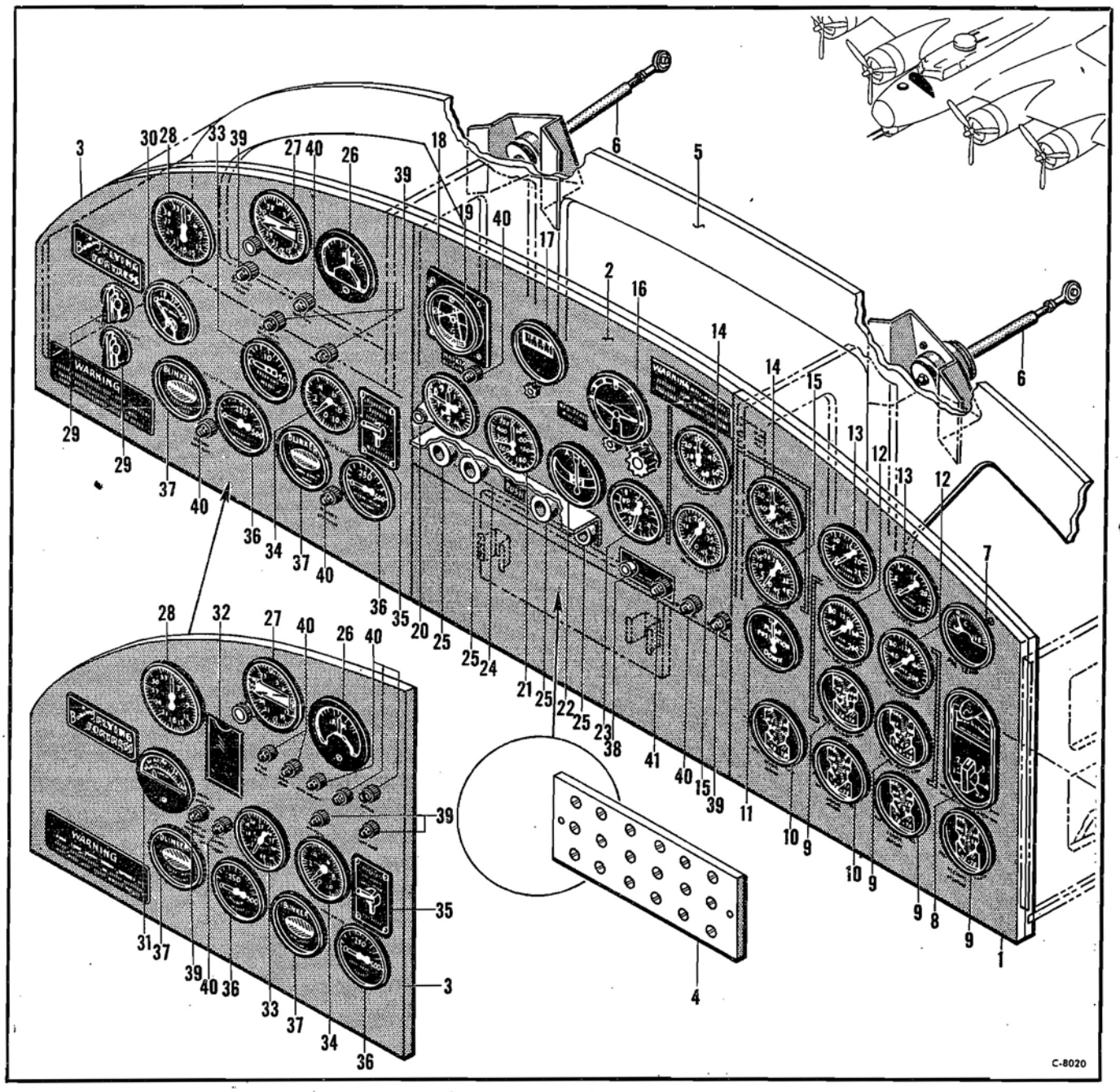

Figure 109—Pilots and Co-pilots Instrument Board

Pilots and Co-pilots Instrument Board

Figure & Index No.	*Part Number*	*1 2 3 4 5 6 7* *Nomenclature*	*Usage Code*	*Units Per Assy.*
	65-7380-514	Installation—Pilots and co-pilots instrument board (see fig. 108)	All	NP
	65-7380-534	Board Assembly	N	1
	65-7380-540	Board Assembly	TF	1
	65-7380-542	Board Assembly	TH	1
	65-7380-545	Board Assembly	QI	1
	65-7380-544	Board Assembly	MJ	1
	65-7380-546	Board Assembly	MM	1
	65-7380-549	Board Assembly	BN	1
	65-7380-550	Board Assembly	MO	1
	65-7380-547	Board Assembly	TO	1
	65-7380-551	Board Assembly	OP	1

PUBLISHED BY AVIALOGS.COM

FUSELAGE

Pilots and Co-pilots Instrument Board

Figure & Index No.	Part Number	1 2 3 4 5 6 7 Nomenclature	Usage Code	Units Per Assy.
	65-7380-555	Board Assembly	PQ	1
	6-10135-11	Panel Assembly—Co-pilots instrument	QA	1
	6-10135-14	Panel Assembly—Co-pilots instrument	OJ	1
	6-10135-15	Panel Assembly—Co-pilots instrument	EQ	1
109-1	6-10135-9	Panel	All	1
2	56-9294-509	Panel Assembly—Flight instrument	MA	1
	56-9294-510	Panel Assembly—Flight instrument	RI	1
	9-3725-14	Panel Assembly—Pilots instrument	HA	1
	9-3725-20	Panel Assembly—Pilots instrument	XH	1
	9-3725-24	Panel Assembly—Pilots instrument	SM	1
	9-3725-28	Panel Assembly—Pilots instrument	MO	1
	9-3725-25	Panel Assembly—Pilots instrument	TO	1
	9-3725-22	Panel Assembly—Pilots instrument	CP	1
	9-3725-32	Panel Assembly—Pilots instrument	PQ	1
3	9-3725-13	Panel—Pilots instrument	QB	1
	9-3725-23	Panel—Pilots instrument	SM	1
	9-3725-29	Panel—Pilots instrument	MO	1
	9-3725-26	Panel—Pilots instrument	TO	1
	9-3725-30	Panel—Pilots instrument	CP	1
	9-3725-33	Panel—Pilots instrument	PQ	1
4	3-14228-2	Panel Assembly—Connector	All	1
	1-21001	Insulator—Connector panel	All	1
5	55-7379-409	Frame Assembly—Pilots instrument board support	All	1
	15-7379-25	Bumper	All	2
	1-29304	Spacer—Fibre	All	1
6	41-5652-5	Rod Assembly—Shock mount	All	2
	REB3N	End (Fafnir)	All	1
7	47AC7K	Indicator—Thermometer (Lewis Eng. Co.) GFE (AN5790-6)	All	1
8	EA47-2C	Indicator Assembly—Fuel quantity (Liquidometer)	All	1
9	77AT2K	Thermometer and Oil Temperature Indicator (Lewis Eng. Co.) GFE (AN5795-6)	All	4
10	NO NUMBER	Indicator—Thermocouple (Type B-11) (Spec 94-27971A) GFE	All	2
11	5911-12B	Indicator—Flap position (Bendix)	All	1
12	AN5772-2	Gage—Dual pressure (oil) GFE	All	2
13	AN5772-1	Gage—Dual pressure (fuel) GFE	All	2
14	AN5770-2	Gage—Manifold pressure GFE	All	2
15	AN5530-2	Indicator—Electric tachometer GFE	All	2
16	656768	Indicator—Flight (gyro-horizon) (Sperry) GFE (AN5736-1)	All	1
17	649742	Indicator—Turn (directional gyro) (Sperry) GFE (AN5735-1)	All	1
18	3-18549	Patch Assembly—Flight instrument	TB	1
19	NO NUMBER	Indicator—Radio receiving (Type I-101) (Type RC-103) GFE	EN	1
20	AN5760-2	Altimeter—Pressure GFE	All	1
21	NO NUMBER	Indicator—Airspeed (Spec 94-27953) (Type D-7) GFE	MA	1
	NO NUMBER	Indicator—Airspeed (Spec 94-27335) (Type F-2) GFE	RI	1
22	AN5820-2	Indicator—Turn and bank GFE	All	1
23	AN5825-2	Indicator—Rate of climb GFE	All	1
24	1-18509-5	Guard Assembly—Propeller feathering switch	All	1
25	65-7380-521	Switch—Propeller feathering	OA	4
	2CC1B4	Switch—Propeller feathering (General Electric) GFE	KJ	4
26	NO NUMBER	Indicator—Pilots director (Spec C24863) (Type D1Z) GFE	All	1
27	10061-1E	Indicator—Remote compass GFE	All	1
28	NO NUMBER	Indicator—Radio compass (Type D81A) GFE	All	1
29	1-22746-1	Control Assembly	QB	2
30	NO NUMBER	Voltmeter (Model 517) (Type S-15172) (Weston)	IC	1
31	AN3202-1	Voltmeter—Alternating current GFE	WO	1
32	074837-1	Case	OL	1
	074837-2	Cover	OL	1
33	6732-03	Gage—Hydraulic oil pressure (Manning, Maxwell, Moore) (AN5771-4A)	BC	1
	AN5771-3A	Gage—Single pressure (de-icer) GFE	NO	1
34	AN5771-5A	Gage—Single pressure (suction) GFE	All	1
35	AN5831-1	Valve—Static pressure selector GFE	All	1
36	NO NUMBER	Gage—Oxygen pressure (Spec 27368) (Type K-1) GFE	All	2
37	AN6029-1	Indicator—Oxygen flow GFE	All	2
38	624	Button (Edwards & Co.)	All	1
39	42B3593-1	Lamp Assembly (red)	All	4
40	42B3593-2	Lamp Assembly (amber)	All	9
41	42B3593-3	Lamp Assembly (green)	All	1
	AN3121-313	Lamp—T3 1-4 single-contact GFE	All	12

PUBLISHED BY AVIALOGS.COM

FUSELAGE

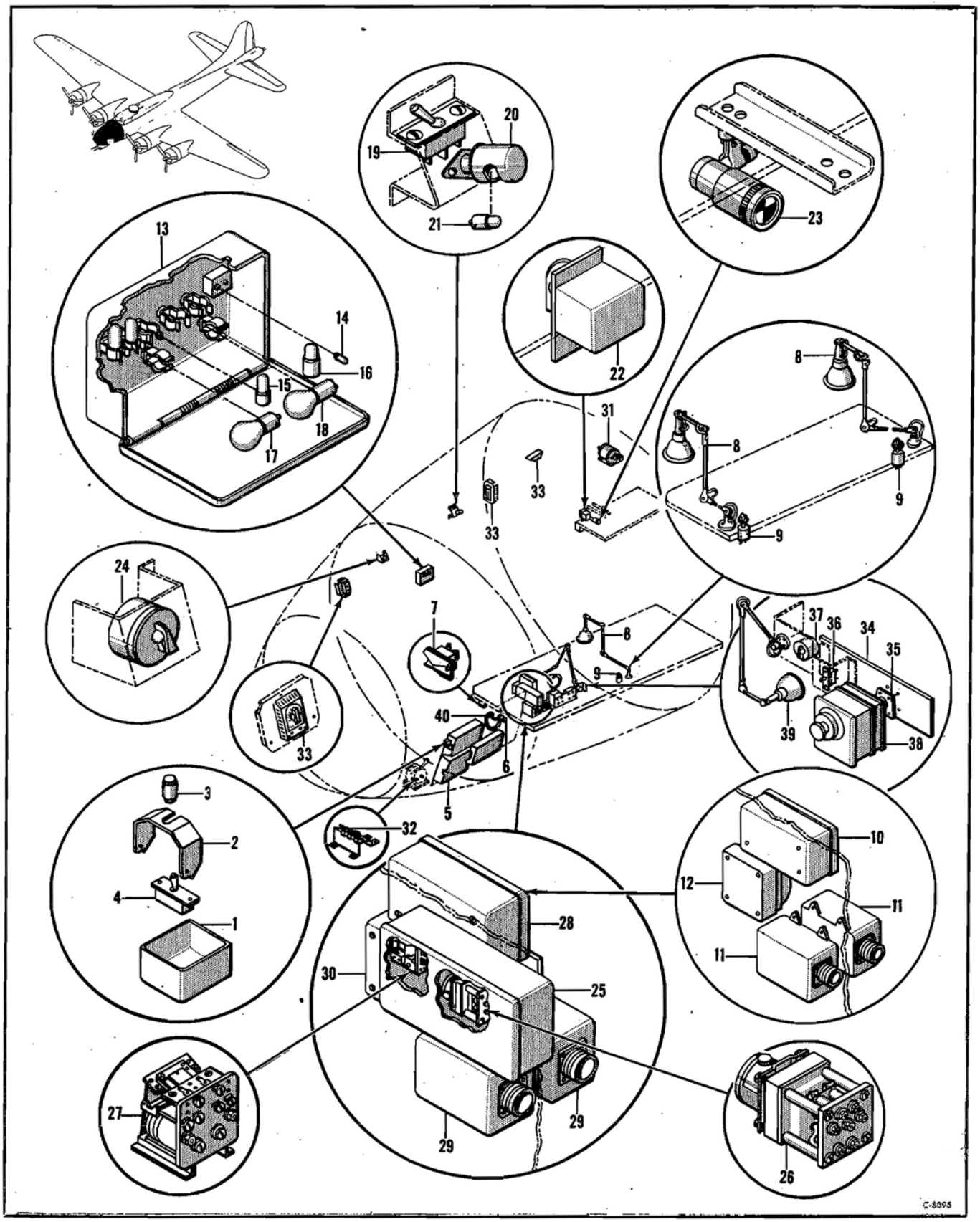

Figure 110—Nose Section Electrical

RESTRICTED
PUBLISHED BY AVIALOGS.COM

FUSELAGE

Nose Section Electrical

Figure & Index No.	Part Number	1 2 3 4 5 6 7 Nomenclature	Usage Code	Units Per Assy.
		Nose Section Electrical		
	55-7332	Installation—Electrical equipment	All	NP
	3-12921	Installation—Bomb release switch	TA	NP
	3-12023	Shield Assembly—Bomb release	TA	1
110-1	41-9981-1	Shield Assembly—Junction box	TA	1
2	1-19823	Guard Assembly	TA	1
3	24-1164	Extension—Lever (Cutler-Hammer)	TA	1
	1-29254	Spring—Latch	TA	1
	21-2366-32-11	Washer	TA	2
4	AN3022-7B	Switch—Single pole toggle	TA	1
5	55-7351	Installation—Bombers control panel (see fig. 116)	All	NP
	6-11312	Installation—Fluorescent bombers lamp	All	NP
6	1-22746	Lamp Assembly—Fluorescent (make from Type C-5)	QB	1
	3-27935	Lamp Assembly—Fluorescent	XM	1
	3-20228	Installation—Blackout switch	HA	NP
7	3-20228-1	Switch Assembly—Blackout	HA	1
	AN3022-2B	Switch—Single pole toggle (Type B5A)	HA	1
	21-7606	Guard—Switch support	HA	1
	6-11489	Installation—Chart table lamp	AD	NP
8	NO NUMBER	Lamp Assembly—Cabin (Spec 94-32372) (Type A-11)	HA	2
	NO NUMBER	Lamp Assembly—Cabin (Spec 94-32372) (Type A-11)	GI	1
9	NO NUMBER	Rheostat—25 watt (Spec 94-32009) (Type C-1)	HA	2
	AN3155-25-25	Rheostat—Aircraft power	GI	1
	9-5877	Installation—Time and bomb relay	HA	NP
10	43-11520-402	Relay Assembly—Time delay	HA	1
	NC28-24V	Relay (American Gas Accumulator Co.)	HA	1
11	RS2	Selector—Rack (P. R. Mallory and Co.)	HA	2
12	3-14686	Bell—Alarm	HA	1
	6-11583	Installation—Spare lamps panel	All	NP
	9-5405-3	Box Assembly—Spare lamp	ZB	1
	9-5405-9	Box Assembly—Spare lamp	HO	1
13	6-12412	Box Assembly—Spare lamp	All	1
	3-16696	Spring	All	1
14	39A3906-2	Lamp GFE	All	2
15	AN3121-2	Lamp—T3 1-4 single-contact GFE	All	3
16	AN3123-301	Lamp—T4 1-2 single-contact GFE	All	1
17	AN3124-307	Lamp—S-8 single-contact GFE	All	1
18	AN3132-308	Lamp—S-8 double contact GFE	All	1
	6-13937	Installation—Drift recorder lamp	All	NP
	6-13937-1	Lamp Assembly	All	1
19	AN3022-5B	Switch—Single pole toggle	All	1
20	38A1762	Lamp Assembly	All	1
21	AN3123-301	Lamp—T4 1-2 single contact GFE	All	1
	3-20128	Installation—Fluorescent lamp control	HA	NP
22	3-20128-1	Control Assembly	HA	1
	1-22746-1	Control (Spec 94-32356) (Type C-5)	HA	1
	6-15258	Installation—Navigators fluorescent lamp	HA	NP
23	1-22746	Lamp Assembly—Fluorescent (Spec 94-32356) (Type C-5)	HA	1
	9-9165	Installation—Gunsight light rheostat	HO	NP
24	NO NUMBER	Rheostat (Spec 94-32229D) (Type 01C)	HO	1
	15-13871	Installation—Navigators table electrical equipment	JI	NP
	15-13871-1	Shield Assembly	HI	1
	15-13871-6	Shield Assembly	SQ	1
25	6-7625	Shield Assembly—Electrical junction	HI	1
	6-7625-6	Shield Assembly—Electrical junction	SQ	1
26	35407	Relay (Guardian Elec. Mfg. Co.)	JI	1
27	NO NUMBER	Relay (Spec 32439) (Type B-9)	JI	1
	15-13871-3	Relay Assembly	JI	1
28	43-11520-402	Relay Assembly—Time delay	JI	1
	NC28-24V	Relay (American Gas Accumulator Co.)	JI	1
29	RS2	Selector—Rack (P. R. Mallory and Co.)	JI	2
30	3-14686	Bell—Alarm	JI	1
31	D12364	Motor (Marquette) (see fig. 85)	All	Ref
32	6-13677	Switch Assembly—Bomb lock (see fig. 153)	HA	Ref
33	NO NUMBER	Rheostat (Spec 94-32357) (Type Q1A) GFE	All	3
	9-5501	Installation—Camera intervalometer	All	NP
	9-5502	Mount Assembly—Intervalometer	TA	1
	9-5502-2	Mount Assembly—Intervalometer	CK	1
	9-5502-3	Mount Assembly—Intervalometer	JQ	1
34	3-18926	Panel Assembly	TA	1
	6-17007	Panel—Intervalometer mount	DK	1
35	42A3524	Plate—Wedge	All	1
	9-5502-1	Channel Assembly	All	1
36	AN3022-2B	Switch—Single pole toggle (Type B5A)	All	1
37	AN3155-25-25	Rheostat—Aircraft power	CK	1
38	NO NUMBER	Intervalometer (Spec 75-188) (Type B3) (installed by government)	All	1
39	NO NUMBER	Lamp Assembly—Cabin (Spec 94-32372) (Type A-11) GFE	CK	1
40	42D4499	Band Assembly—Bombardier head	All	1

PUBLISHED BY AVIALOGS.COM

FUSELAGE

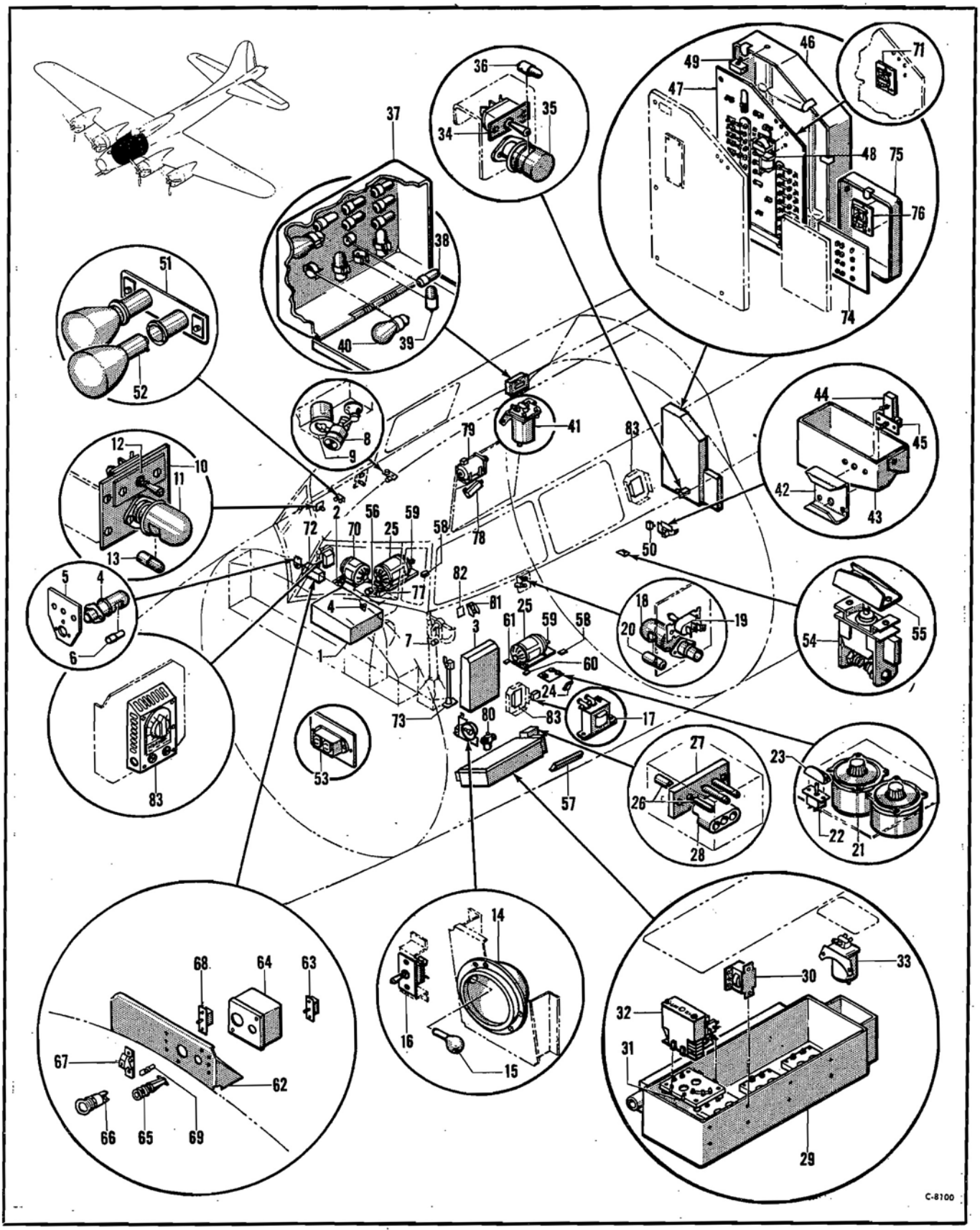

Figure 111—Pilot's Compartment Electrical Equipment

PUBLISHED BY AVIALOGS.COM

FUSELAGE

Pilots Compartment Electrical Equipment

Figure & Index No.	Part Number	1 2 3 4 5 6 7 Nomenclature	Usage Code	Units Per Assy.
		Pilots Compartment Electrical Equipment		
	55-7332	Installation—Electrical equipment	All	NP
111-1	15-7382	Installation—Central control board (see fig. 112)	All	NP
	9-5525	Installation—Pilots lamp and accelerometer	Y	NP
2	1-22746	Lamp Assembly—Fluorescent	Y	1
3	14-3281	Installation—Pilots control panel shield (see fig. 112)	All	NP
	6-11572	Installation—Instrument panel lamp	All	NP
	6-11572-3	Lamp Assembly (LH)	All	1
	6-11572-2	Lamp Assembly (RH)	All	1
4	38A1762	Lamp Assembly (Type A-6)	All	1
5	1-24927	Support Assembly—Light switch (used on 6-11572-2 only)	All	1
	AN3022-5B	Switch—Single pole toggle	All	1
6	AN3123-301	Lamp—T4 1-2 single-contact GFE	All	2
	6-11315	Installation—Fluorescent lamp (LH)	All	NP
	6-11315-1	Installation—Fluorescent lamp (RH)	All	NP
	6-11315-2	Lamp Assembly	QB	1
	6-11315-3	Lamp Assembly	XM	1
7	1-22746	Lamp Assembly—Fluorescent	QB	1
	3-27935-1	Lamp Assembly—Fluorescent	XM	1
	3-15192	Clamp Assembly—Lamp support	All	1
	6-11567	Installation—Pilots compass lamp	All	NP
8	1-22746	Lamp Assembly—Fluorescent	QB	1
	3-27935-1	Lamp Assembly—Fluorescent	XM	1
9	1-22746-1	Control Assembly	QB	1
	6-13180	Installation—Cockpit lamp	All	NP
	6-13180-1	Plate Assembly	Y	1
	6-13180-3	Plate Assembly	WG	1
10	6-13180-2	Plate	Y	1
	6-13180-4	Plate	WG	1
11	38A1762	Lamp Assembly (Type A-6)	All	1
12	AN3022-5B	Switch—Single pole toggle	All	1
13	AN3131-303	Lamp—G-6 single-contact GFE	All	1
	6-11570	Installation—Dome lamp	All	NP
14	37B4983	Lamp Assembly (Type A-5)	All	1
15	6-11570-1	Lamp GFE	All	1
16	AN3022-2B	Switch—Single pole toggle	All	1
	9-4604	Installation—Radio compass transformer	HA	NP
17	T46914	Transformer (Thordarson Elec Mfg. Co.)	HA	1
	6-13175	Installation—Cockpit lamp (LH)	All	NP
	6-13175-3	Installation—Cockpit lamp (RH)	All	NP
	6-13175-1	Support Assembly—Lamp	All	1
18	38A1762	Lamp Assembly	All	1
19	AN3022-5B	Switch—Single pole toggle	All	1
20	AN3131-303	Lamp—G-6 single-contact GFE	All	1
	6-7899-2	Installation—De-icer pump rheostat	All	NP
21	567-1	Rheostat—De-icer (Eclipse Aviation Corp.)	CB	2
	5543	Rheostat—De-icer (Ohmite Mfg. Co.)	IL	2
22	AN3022-2B	Switch—Single pole toggle	CB	1
23	21-7606-1	Guard—Toggle switch	CB	1
	6-10493	Installation—Alternating current power box	All	NP
24	6-10493-8	Box Assembly	ZB	1
	6-10493-10	Box Assembly	GC	1
	8-1280	Installation—Dynamotor and inverter (LH)	All	NP
	8-1280-1	Installation—Dynamotor and inverter (RH)	TC	NP
25	NO NUMBER	Inverter (Spec 32270) GFE	All	1
	6-10098	Installation—External power source receptacle	All	NP
	6-10098-1	Receptacle Assembly	CB	1
26	R3082	Receptacle (Mfnes Equipment Co.)	CB	1
	1-21950	Fitting—Power receptacle	CB	1
27	42B3748	Receptacle Assembly	All	1
28	42B6927	Adapter Assembly GFE	IL	1
	15-7985	Installation—Generator voltage regulator	All	NP
	15-7985-14	Shield Assembly	Y	1
	15-7985-15	Shield Assembly	VG	1
	15-7985-16	Shield Assembly	PQ	1
29	14-2870-13	Shield Assembly—Generator voltage regulator	Y	1
	14-2870-21	Shield Assembly—Generator voltage regulator	WG	1
30	NO NUMBER	Transformer Assembly (Spec 32485) (Type B-1)	PQ	4
31	40D8445-2	Base Assembly	All	4
32	NO NUMBER	Regulator—Generator voltage (Spec 94-32276) GFE	All	4
33	NO NUMBER	Switch—Solenoid (Spec 94-32324) GFE	All	1
	6-13137	Installation—Station 4 fuse panel lamp	All	NP
	6-13137-1	Lamp Assembly	All	1
34	AN3022-5B	Switch—Single pole toggle	All	1
35	38A1762	Lamp Assembly (Type A-6)	All	1
36	AN3131-303	Lamp—G-6 single-contact GFE	All	1
	6-12438	Installation—Spare lamps panel	All	NP
	9-5405-4	Box Assembly—Spare lamps	ZB	1
	9-5405-8	Box Assembly—Spare lamps	HO	1
37	6-12412	Box Assembly—Spare lamps	All	1
	3-16696	Spring	All	1
38	AN3121-2	Lamp—T3 1-4 single-contact GFE	All	7
39	AN3123-301	Lamp—T4 1-2 single-contact GFE	All	3
40	AN3124-307	Lamp—S-8 single-contact GFE	All	2
	6-10671	Installation—Hydraulic pump switch	All	NP
41	NO NUMBER	Switch—Solenoid starter (Spec 94-32324A) (Type B-4) GFE	All	1

PUBLISHED BY AVIALOGS.COM

FUSELAGE

Pilots Compartment Electrical Equipment

Figure & Index No.	Part Number	1 2 3 4 5 6 7 Nomenclature	Usage Code	Units Per Assy.
	6-9450	Installation—Fuel transfer pump switch	All	NP
111–42	6-9450-1	Guard Assembly	All	1
43	1-19951	Guard Assembly	All	1
44	AN3022-1B	Switch—Single pole toggle	All	1
45	3-10594	Switch	All	1
	1-18896	Connection—Switch handle	All	1
	55-7538-404	Installation—Station 4 fuse shield	EA	NP
	55-7538-413	Shield Assembly	EA	1
46	54-2079	Shield Assembly—Station 4 fuse	EA	1
47	75-7635-612	Panel Assembly—Station 4 fuse	EA	1
48	55-7538-402	Relay (24 volt single-contact C324D)	EA	1
49	AN3022-3B	Switch—Single pole toggle (step lamp)	EA	1
	3-14080	Installation—Fuel transfer capacitor	All	NP
50	CA275X	Capacitor (P. R. Mallory Co.)	All	1
	6-14780	Installation—Spare fluorescent lamp	EA	NP
51	3-16946	Holder—Spare lamps	EA	1
52	165-22-315E	Lamp—Fluorescent (General Electric Co.)	EA	2
	6-14424	Installation—A.F.C.E. heat receptacle	All	NP
53	6-14424-1	Receptacle Assembly	All	1
	7540	Receptacle (Harvey Hubbell)	All	1
	6-16278	Installation—Turret disconnect switch (upper)	NG	NP
54	NO NUMBER	Switch—Toggle (Spec 94-32227B) (Type B-16)	NG	1
55	3-24536	Guard Assembly—Toggle switch	NG	1
	6-16884	Installation—Fluorescent lamp	WG	NP
56	1-22746	Lamp Assembly	UG	1
	3-27935	Lamp Assembly	XM	1
	6-18929	Installation—Fluorescent lights resistor	XM	NP
57	6-18929-1	Panel Assembly	XM	1
	9-9153	Installation—Inverter control relay (LH)	WO	NP
	9-9153-1	Installation—Inverter control relay (RH)	WO	NP
58	9565H2A	Relay (Cutler-Hammer)	WO	1
59	NO NUMBER	Relay—Single pole (Spec 94-32351A) (Type B5B)	WO	1
60	44B18573	Relay (used on 9-9153 only)	WO	1
61	44B18574	Relay (used on 9-9153 only)	WO	1
	9-6073	Installation—Salvo and bomb door switch	FI	NP
	9-6073-1	Bracket Assembly	FI	1
62	3-20532	Bracket—Salvo switch	FI	1
63	AN3022-7B	Switch—Single pole toggle	FI	1
64	41-9981	Shield Assembly	FI	1
65	42B3593-1	Lamp Assembly (red)	FI	1
66	275	Light Assembly (red) (Drake Mfg. Co.)	FI	1
67	3-24506	Guard—Switch	FI	1
68	39A2511	Switch	FI	1
69	AN3121-2	Lamp—T3 1-4 single-contact GFE	FI	1
	9-10614	Installation—400 cycle inverter	WP	NP
70	NO NUMBER	Inverter (Spec 94-32270) GFE	WP	1
	9-10614-3	Filler	WP	2
	41-6975-24-9	Washer	WP	4
	15-11683	Installation—Station 4 fuse panel	QH	NP
	15-11684	Panel Assembly—Station 4 fuse	JH	1
	15-11684-25	Panel Assembly—Station 4 fuse	BI	1
	15-11684-31	Panel Assembly—Station 4 fuse	WO	1
	15-11684-1	Panel Assembly—Station 4 fuse	JH	1
	15-11684-23	Panel Assembly—Station 4 fuse	BI	1
	15-11684-32	Panel Assembly—Station 4 fuse	WO	1
71	2028	Relay (Leach Relay Co.)	All	1
72	14-4065	Installation—Switch panel (see fig. 118)	CQ	NP
73	14-4099	Installation—Formation stick equipment (see fig. 118)	PQ	NP
	6-12625	Installation—Relay and fuse box	EA	NP
	6-12625-5	Box Assembly—Fuse	J	1
	6-12625-7	Box Assembly—Fuse	IF	1
74	3-19627-6	Panel Assembly	J	1
	3-19627-10	Panel Assembly	IF	1
75	6-12624-5	Box Assembly	EA	1
76	2028	Relay Assembly (Leach Relay Co.)	EA	1
77	6-15229	Selector Assembly—Turbo (see fig. 119)	ZE	Ref
78	151	Switch Assembly—Pres reg (Geo. A. Starbird Co.) (see fig. 121)	All	Ref
79	IE678	Pump—Hydraulic (Pesco) (see fig. 121)	All	Ref
80	577-2	Valve Assembly—De-icer (Eclipse) (see T.O. 03-35B-4) (see fig. 136)	All	Ref
	6-13656	Installation—Window de-icer panel	All	NP
	6-13656-2	* Panel Assembly	All	1
81	AN3022-1B	Switch—Single pole toggle	All	1
82	C6363-2-20A	Breaker—Circuit (Spencer Thermostat)	All	1
83	NO NUMBER	Rheostat (Spec 94-32357) (Type Q1A) GFE	All	3

RESTRICTED
PUBLISHED BY AVIALOGS.COM

FUSELAGE

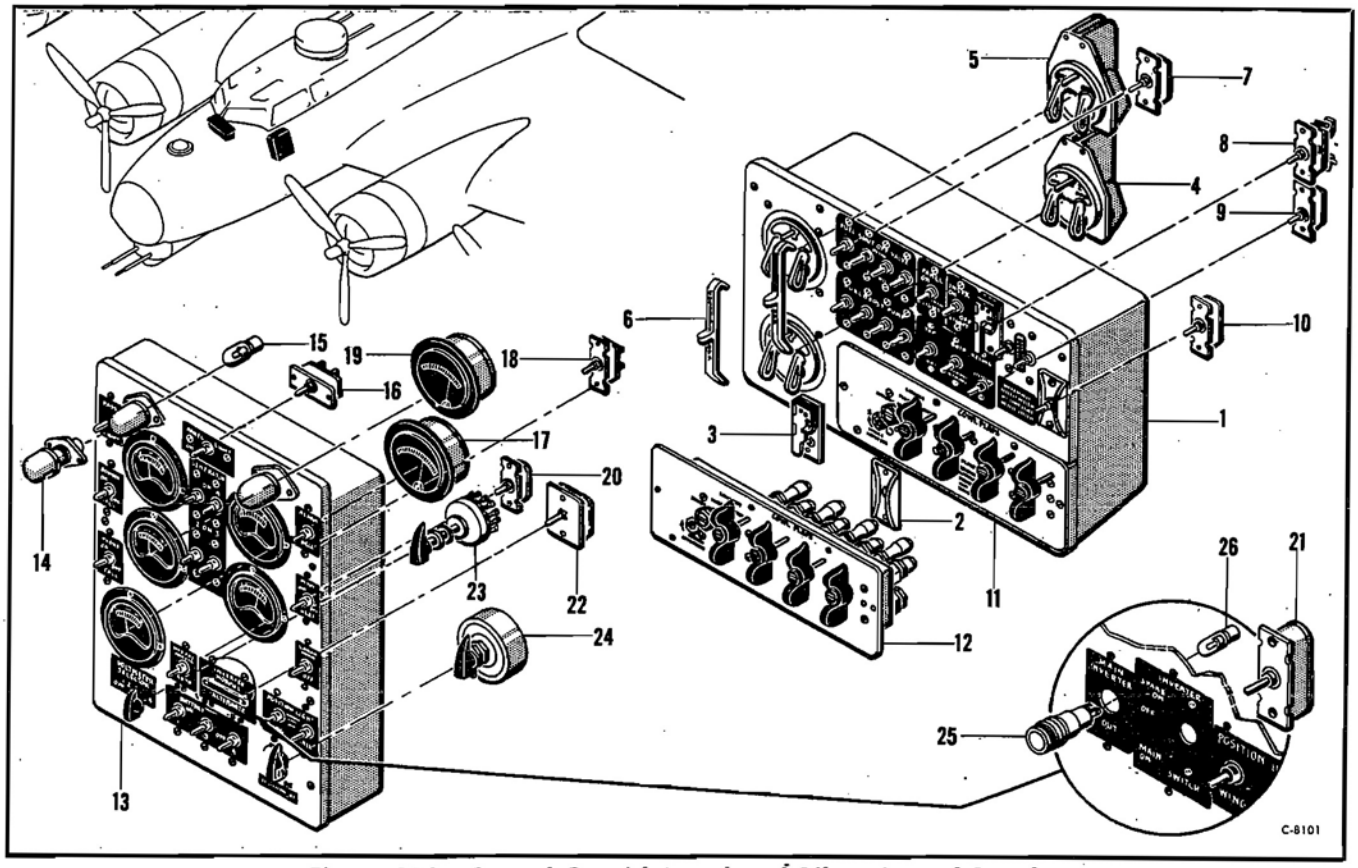

Figure 112—Central Control Board and Pilots Control Panel

Central Control Board and Pilots Control Panel

Figure & Index No.	Part Number	1 2 3 4 5 6 7 Nomenclature	Usage Code	Units Per Assy.
		Central Control Board and Pilots Control Panel		
	15-7382	Installation—Central control board (see fig. 111)	All	NP
112-1	7-1961	Panel Assembly—Central control	KB	1
	7-1961-10	Panel Assembly—Central control	ZL	1
	7-1961-11	Panel Assembly—Central control	HO	1
	7-1961-2	Panel Assembly	ZB	1
	7-1961-9	Panel Assembly	HO	1
2	7-1961-3	Guard Assembly	All	1
3	21-7859	Guard Assembly—Landing gear switch	All	1
4	85788	Switch—Ignition (Briggs and Stratton)	All	1
5	85787	Switch—Ignition (Briggs and Stratton)	All	1
	41-4103-2	Installation—Ignition switch link	All	NP
6	41-4103-3	Link Assembly	YB	1
	41-4103-4	Link Assembly	ZN	1
7	AN3022-2B	Switch—Single pole toggle	All	10
8	AN3022-1B	Switch—Single pole toggle	All	5
9	40A5553	Switch	All	1
10	AN3022-5B	Switch—Single pole toggle	All	1
11	7-1961-1	Panel Assembly	All	1
	6-9227-1	Panel	All	1
12	G10340	Valve—Cowl flap (Adel)	All	1
	14-3281	Installation—Pilots control panel shield (see fig. 111)	All	NP
13	14-3281-9	Shield Assembly	Z	1
	14-3281-8	Shield Assembly	XG	1
	14-3281-11	Shield Assembly	UO	1
	14-3281-13	Shield Assembly	LP	1
	14-3281-16	Shield Assembly	QQ	1
	54-2358-403	Shield Assembly—Pilots control panel	IC	1
	54-2358-410	Shield Assembly—Pilots control panel	UO	1
	54-2358-412	Shield Assembly—Pilots control panel	MP	1
	1-23592	Washer—Laminated phenolic	All	8
14	38A1762	Lamp Assembly (Type A-6)	All	2
15	AN3121-301	Lamp—T3 1-4 single contact GFE	All	2
16	AN3022-5B	Switch—Single pole toggle	All	1
17	NO NUMBER	Ammeter (Spec 94-32173A) (Type E-1) GFE	All	4
18	AN3022-2B	Switch—Single pole toggle	All	10
19	NO NUMBER	Voltmeter (Spec 94-32172) (Type B-1) GFE	All	1
20	AN3022-8B	Switch—Single pole toggle	All	3
21	AN3022-1B	Switch—Single pole toggle	All	2
22	39A2512	Switch Assembly (Type C-2)	IC	2
23	3215J	Switch Assembly (P. R. Mallory and Co.)	All	1
24	5543	Rheostat (Ohmite Mfg. Co.)	All	1
25	42B3593-1	Lamp Assembly—Indicator GFE	All	1
26	AN3121-313	Lamp—T3 1-4 single contact GFE	All	1

PUBLISHED BY AVIALOGS.COM

FUSELAGE

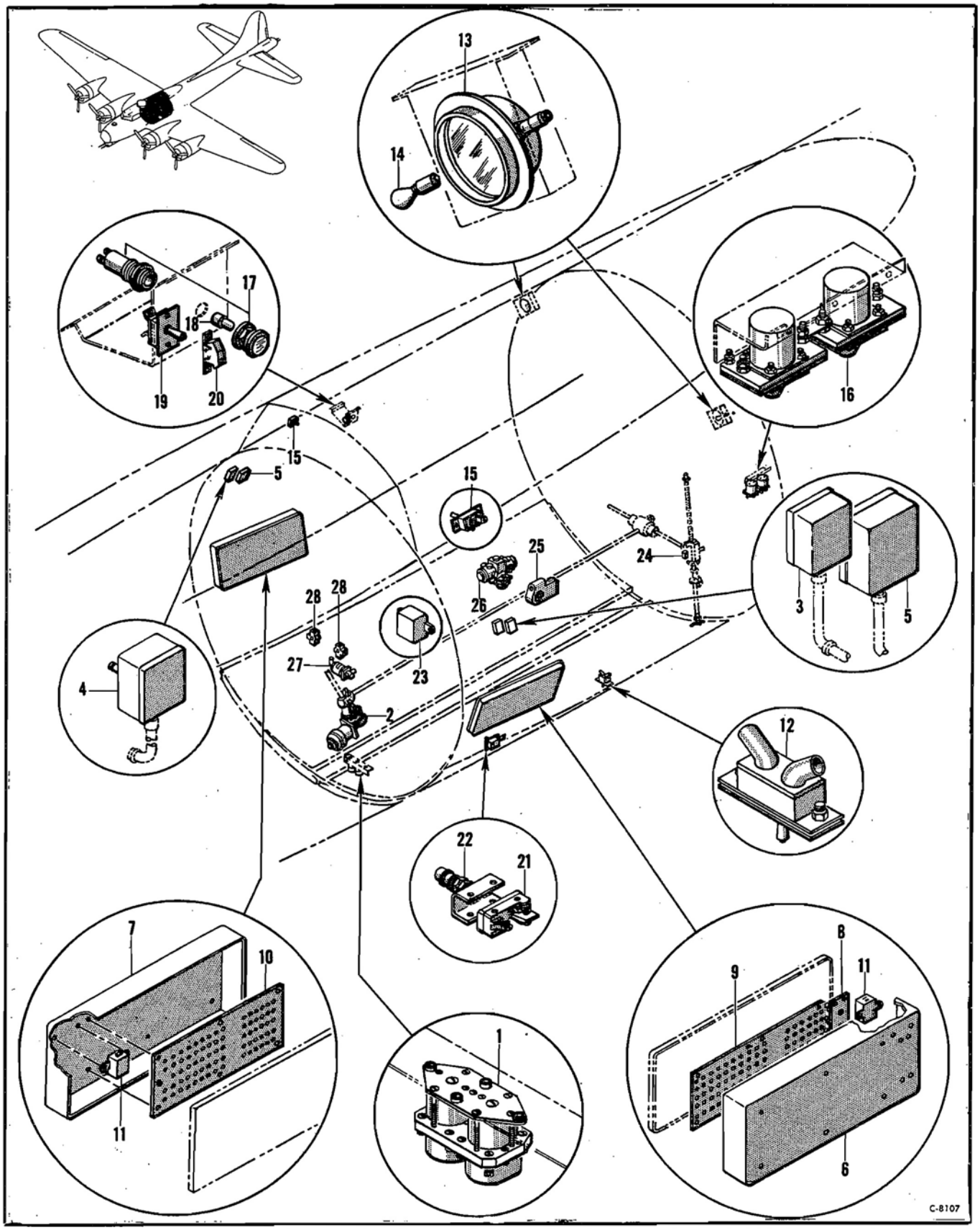

Figure 113—Forward Center Fuselage Electrical Equipment

RESTRICTED
PUBLISHED BY AVIALOGS.COM

FUSELAGE

Forward Center Fuselage Electrical Equipment

Figure & Index No.	Part Number	1 2 3 4 5 6 7 Nomenclature	Usage Code	Units Per Assy.
		Forward Center Fuselage Electrical Equipment		
	55-7332	Installation—Electrical equipment	All	NP
	3-19530	Installation—Bomb door solenoid	All	NP
113-1	NO NUMBER	Switch—Solenoid (Spec 94-32181) (Type D-1)	HA	1
	6046H11	Solenoid (Cutler-Hammer)	CI	1
	LN2	Solenoid (Square D Co.) (24 volts)	ZO	1
	9-2938-1	Installation—Bomb door motor	All	NP
2	1073-1A	Motor—Bomb door (Eclipse) (see T.O. 03-1-5)	MB	1
	1073-1B	Motor—Bomb door (Eclipse) (see T.O. 03-1-5)	FM	1
	6-9509	Installation—Generator wing break shield (LH)	All	NP
	6-9509-1	Installation—Generator wing break shield (RH)	All	NP
3	6-9509-2	Shield Assembly (LH)	All	1
4	6-9509-3	Shield Assembly (RH)	All	1
	6-7889	Installation—Ignition box (LH)	All	NP
	6-7889-1	Installation—Ignition box (RH)	All	NP
5	21-8364-4	Box Assembly—Electrical junction	All	1
	21-8891-4	Panel Assembly—Connector	All	1
	14-2072	Installation—Wing junction shield (LH)	All	NP
	14-2072-1	Installation—Wing junction shield (RH)	All	NP
	14-2072-10	Shield Assembly (LH)	OD	1
	14-2072-11	Shield Assembly (RH)	G	1
	14-2072-12	Shield Assembly (LH)	EF	1
	14-2072-13	Shield Assembly (RH)	CF	1
	14-2072-19	Shield Assembly (RH)	IL	1
6	6-9325-4	Shield Assembly—Junction (LH)	OD	1
	6-9325-8	Shield Assembly—Junction (LH)	EF	1
7	6-9325-1	Shield Assembly—Junction (RH)	G	1
	6-9325-9	Shield Assembly—Junction (RH)	DF	1
8	3-16953	Panel Assembly—LH wing connector	All	1
9	9-3600-4	Panel Assembly—LH wing connector	All	1
10	9-3601	Panel Assembly—RH wing connector	All	1
11	CA275X	Capacitor (P. R. Mallory)	All	1
	3-13374	Installation—Bomb door safety switch	HA	NP
12	3-13374-1	Switch Assembly	HA	1
	AN3022-8B	Switch—Single pole toggle	HA	1
	3-8728-6	Spring Assembly	HA	1
	3-10826	Installation—Bomb bay lamp (LH)	All	NP
	3-10826-1	Installation—Bomb bay lamp (RH)	All	NP
13	37B4983	Lamp Assembly—Cabin (Type A-5)	All	1
14	3-10826-6	Lamp GFE	All	1
	41-7288	Spacer	All	3
	6-14117	Installation—Bomb rack switch (LH)	All	NP
	6-14117-1	Installation—Bomb rack switch (RH)	All	NP
	6-14117-2	Bracket Assembly (LH)	All	1
	6-14117-3	Bracket Assembly (RH)	All	1
15	AN3022-2B	Switch—Single pole toggle	All	1
	6-14948	Installation—Flap motor solenoid	All	NP
16	987-4	Solenoid (Eclipse) (see T.O. 03-1-5)	CB	2
	NO NUMBER	Solenoid (Spec 94-32324B) (Type B-4)	IL	2
	6-15200	Installation—Crews salvo switch	II	NP
17	109GGR	Light Assembly (Korry Mfg. Co.)	II	1
18	AN3121-2	Lamp—T3 1-4 single-contact GFE	II	1
19	39A2511	Switch (Type C-1)	II	1
20	3-24506	Guard—Switch	II	1
	9-7304	Installation—Bomb door switch	II	NP
	9-7304-1	Switch Assembly	II	1
21	YZR31	Switch (Micro Switch Corp.)	II	1
22	M2	Actuator (Micro Switch Corp.)	II	1
	3-19599	Installation—Capacitor	All	NP
23	CA275X	Capacitor (P. R. Mallory)	All	1
24	WZR31	Switch (Micro Switch Corp.) (see fig. 155)	OA	Ref
25	9-5259-6	Switch Assembly—Limit (see fig. 157)	KJ	Ref
26	574-2	Valve Assembly—De-icer distributor (Eclipse) (see T.O. 03-35B-4) (see fig. 139)	All	Ref
27	RG4430-2	Pump Assembly—Fuel transfer (Romec) (see fig. 105)	All	Ref
28	940167	Valve—Fuel transfer selector (Type PG-4) (Aero Supply) (see AN03-10-39) (see fig. 106)	All	Ref

PUBLISHED BY AVIALOGS.COM

FUSELAGE

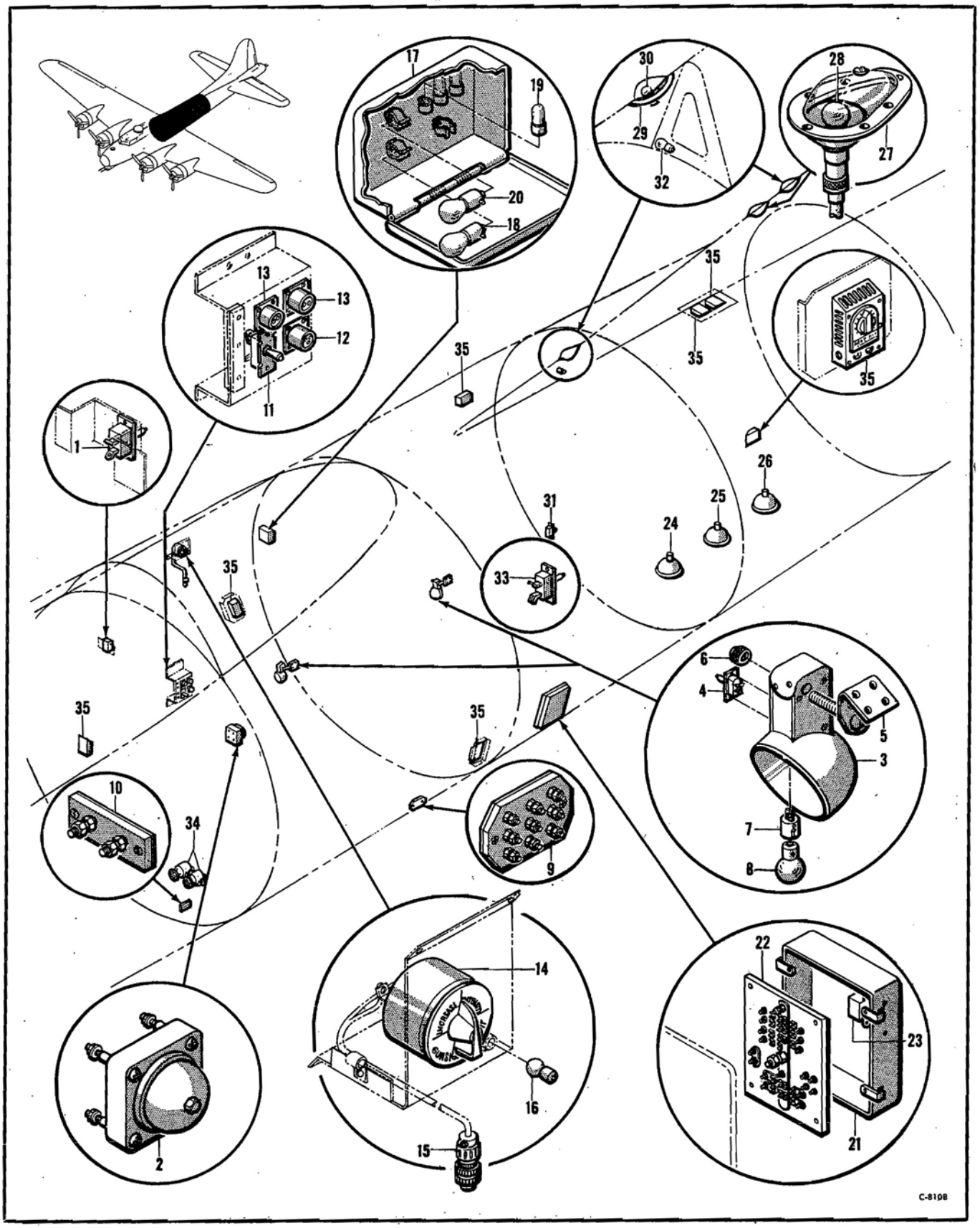

Figure 114—Aft Center Fuselage Electrical Equipment

PUBLISHED BY AVIALOGS.COM

FUSELAGE

Aft Center Fuselage Electrical Equipment

Figure & Index No.	Part Number	1 2 3 4 5 6 7 Nomenclature	Usage Code	Units Per Assy.
		Aft Center Fuselage Electrical Equipment		
	55-7332	Installation—Electrical equipment	All	NP
	6-13372	Installation—Bomb bay light switch	All	NP
114-1	AN3022-3B	Switch—Single pole toggle	All	1
	46-9346	Installation—Radio compartment signal	All	NP
2	3-14686	Bell—Alarm	All	1
	56-7758	Installation—Radio compartment lamp (LH forward)	All	NP
	56-7758-1	Installation—Radio compartment lamp (LH aft)	All	NP
	6-7734	Lamp Assembly—Shaded (LH forward)	All	1
	6-7734-1	Lamp Assembly—Shaded (LH aft)	All	1
3	9-5892	Housing Assembly—Lamp	All	1
4	AN3022-2B	Switch—Single pole toggle	All	1
5	3-11351	Bracket Assembly—Radio lamp	All	1
6	41-8428	Knob—1-4 threaded	All	1
7	37A4527	Socket Assembly	All	1
8	NO NUMBER	Lamp (21CP-28V) (S-8 clear bulb) (5-C base) GFE	All	1
	3-13626	Installation—Rear wing junction panel	All	NP
9	3-13370	Panel Assembly—Connector	All	1
	41-8835	Insulator	All	1
	3-21395-1	Installation—Panel connector	All	NP
10	1-17244	Panel Assembly—Connector	All	1
	1-18382	Insulator	All	1
	6-12851	Installation—Camera equipment receptacle	All	NP
	6-12851-1	Channel Assembly	All	1
11	AN3022-2B	Switch—Single pole toggle	All	1
12	AN3106-16S6P	Plug—Electrical connector	All	1
13	AN3102-16-11S	Receptacle—Electrical connector	All	2
	9-6882	Installation—Gun sight light rheostat	KJ	NP
	9-6882-1	Panel Assembly	ZI	1
	9-6882-4	Panel Assembly	GN	1
14	NO NUMBER	Rheostat (spec 94-32229D) (type 01C)	All	1
15	AN3106-10S2S	Plug—Electrical connector	All	1
16	9-6882-3	Lamp GFE	GN	1
	6-12436	Installation—Spare lamps panel	All	NP
	9-5405-5	Box Assembly—Spare lamps	TD	1
	9-5405-6	Box Assembly—Spare lamps	ZI	1
17	6-12412	Box Assembly—Spare lamps	All	1
	3-16696	Spring	All	1
18	9-5405-7	Lamp—Spare GFE	ZI	1
19	AN3121-2	Lamp—T3 1-4 single-contact GFE	All	3
20	AN3124-307	Lamp—S-8 single-contact GFE	All	1
	69-3659	Installation—Station 6 fuse shield	All	NP
	69-3659-614	Shield Assembly	HA	1
	69-3659-615	Shield Assembly	ZH	1
	69-3659-616	Shield Assembly	EN	1
21	7-1535	Shield Assembly	All	1
22	7-1646-17	Panel Assembly—Fuse	HA	1
	7-1646-19	Panel Assembly—Fuse	JI	1
23	CA275X	Capacitor (P. R. Mallory)	All	1
	14-3004	Installation—Recognition lights lamp	All	NP
24	AN3096-5	Light Assembly—Downward recognition (amber) GFE	All	1
25	AN3096-6	Light Assembly—Downward recognition (green) GFE	All	1
26	AN3096-4	Light Assembly—Downward recognition (red) GFE	All	1
	6-10437	Installation—Identification light	ZB	NP
27	AN3097-2	Light Assembly—Upward recognition GFE	ZB	1
28	6-10437-1	Lamp GFE	ZB	1
	3-12999	Installation—Body position light lamp	All	NP
29	37B4962-7	Lamp Assembly GFE	All	1
30	3-12999-2	Lamp GFE	All	1
	6-14926	Installation—Auxiliary power plant switch	E	NP
31	8851	Switch (Cutler-Hammer)	E	1
	3-29907	Installation—Spare lamp	GN	NP
32	3-29907-1	Lamp—Spare GFE	FN	2
	3-29907-2	Lamp—Spare	WQ	2
	3-24561	Installation—Turret disconnection switch	All	NP
33	NO NUMBER	Switch (spec 94-32227B) (type B-16)	All	1
34	744-6	Pump Assembly—Propeller anti-icer (Eclipse) (see T.O. 03-1-5) (see fig. 138)	CB	Ref
	AN6100-1	Pump Assembly—Fluid metering (see fig. 138)	IL	Ref
35	NO NUMBER	Rheostat (spec 94-32357) (type Q1A) GFE	All	7

PUBLISHED BY AVIALOGS.COM

FUSELAGE

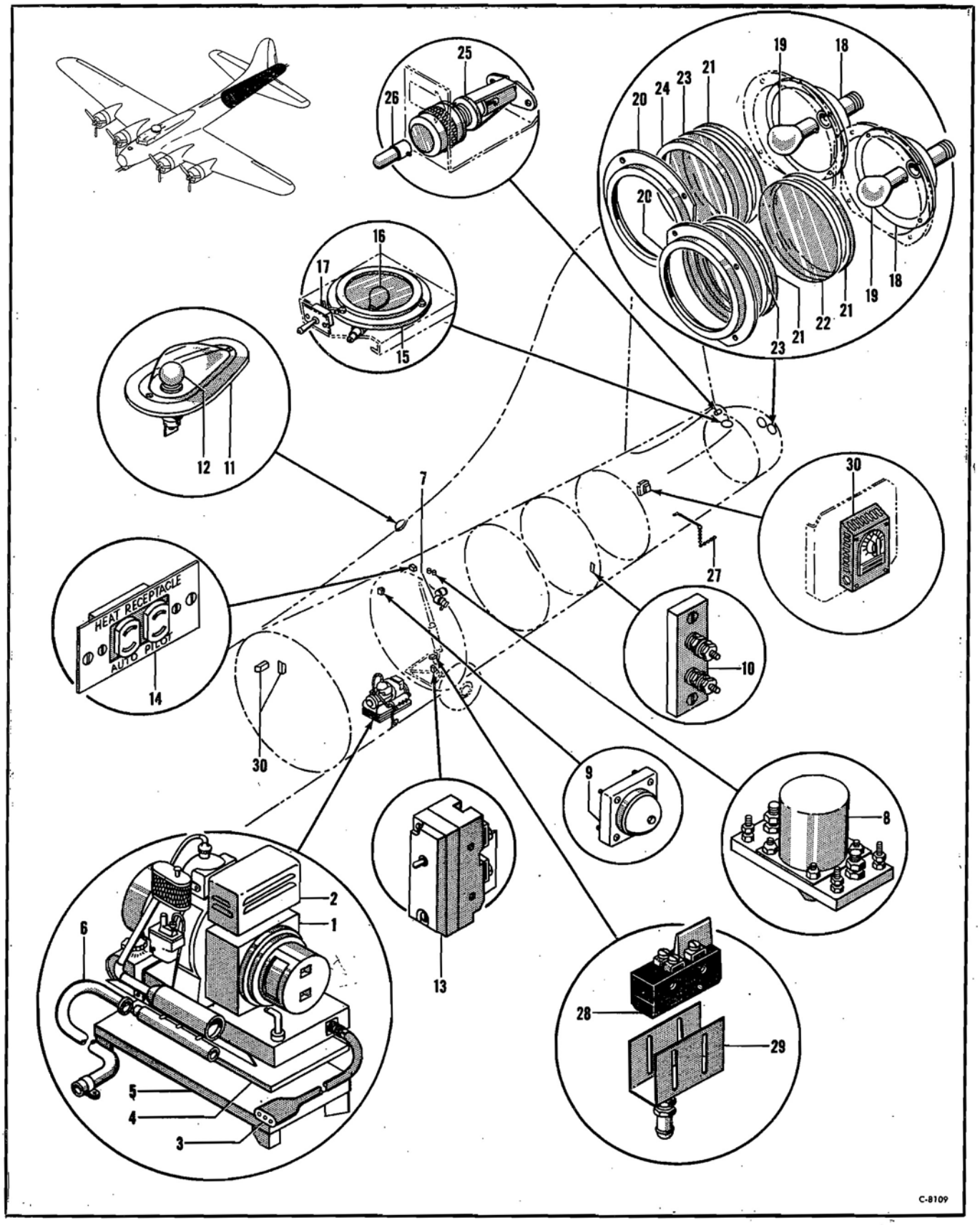

Figure 115—Aft Fuselage Electrical Equipment

PUBLISHED BY AVIALOGS.COM

FUSELAGE

Aft Fuselage Electrical Equipment

Figure & Index No.	Part Number	1 2 3 4 5 6 7 Nomenclature	Usage Code	Units Per Assy.
		Aft Fuselage Electrical Equipment		
	55-7332	Installation—Electrical equipment	All	NP
	15-7983	Installation—Auxiliary power plant	All	NP
115-1	NO NUMBER	Power Plant—Auxiliary (Spec 94-32313) GFE	All	1
2	NO NUMBER	Regulator—Voltage (Spec 94-32276) GFE	All	1
	15-7983-1	Connector Assembly	All	1
3	3-15131	Plug Assembly—Electrical connector	All	1
	AN3057-16	Adapter—Electrical	All	1
	AN3106-28-5S	Plug—Electrical connector	All	1
4	15-7983-2	Frame Assembly—Mount GFE	All	1
5	8-1532-7	Support Assembly—Auxiliary power plant	E	1
	3-19041	Strap Assembly—Power cable	E	1
6	15-7983-8	Tube—Exhaust	E	1
	55-7622	Installation—Tail gear retracting motor	All	NP
7	1227-1A	Motor Assembly—Tail gear (see AN03-5CC-26)	All	1
	6-9474	Installation—Tail wheel solenoid	All	NP
	6-9474-2	Solenoid Assembly	CB	1
8	NO NUMBER	Switch—Solenoid (Spec 94-32181) (Type D-1)	CB	2
	NO NUMBER	Switch—Solenoid (Spec 94-32324B) (Type B-4)	IL	2
	6-8944	Installation—Gunners bell	All	NP
9	3-14686	Bell—Alarm	All	1
	1-17565-1	Installation—Station 9 panel	HA	NP
10	1-17244	Panel Assembly—Connector	HA	1
	1-18382	Insulator	HA	1
	3-12999	Installation—Body position light lamp	All	NP
11	37B4962-7	Lamp Assembly GFE	All	1
12	3-12999-2	Lamp (3CP28V-T4 1-2 SC clear bulb) GFE	All	1
	6-13928	Installation—Tail gear switch	All	NP
13	AN3210-1	Switch—Low travel limit	All	2
	6-14425	Installation—A.F.C.E. heat receptacle	All	NP
14	6-14425-1	Receptacle Assembly	All	1
	7540	Receptacle (Harvey Hubbell Inc.)	All	1
	3-15137	Installation—Rear gunner dome light lamp	All	NP
15	37B4983	Lamp Assembly	All	1
16	AN3124-307	Lamp—S-8 single contact GFE	All	1
	41-7288-2	Spacer	All	3
17	AN3022-2B	Switch—Single pole toggle	All	1
	9-3581	Installation—Bomb release lamp	All	NP
18	37D4865-1	Lamp Assembly	All	2
19	9-3581-1	Lamp (100CP28V-6 16 1-2 bulb SC bayonet cand base) GFE	All	2
20	3-12996	Retainer—Lamp lens	All	2
21	36B3422	Gasket	All	3
22	36B3423	Glass	All	1
23	41-8573	Lens—Signal lamp	All	2
24	9-3581-2	Filler	All	1
	6-14518	Installation—Oxygen warning light (LH)	XB	NP
	6-14518-1	Installation—Oxygen warning light (RH)	XB	NP
25	42B3593-2	Lamp Assembly—Indicator GFE	All	1
26	AN3121-313	Lamp—T3 1-4 single contact GFE	All	1
	3-13503	Installation—Static ground wire	XL	NP
27	3-13503-4	Wire Assembly	XL	1
	3-20754	Installation—Tail gear limit switch	All	NP
28	AN3210-1	Switch—Low travel limit	All	1
29	M2	Actuator (Micro Switch)	All	1
30	NO NUMBER	Rheostat (Spec 94-32357) (Type Q1A) GFE	All	3

PUBLISHED BY AVIALOGS.COM

FUSELAGE

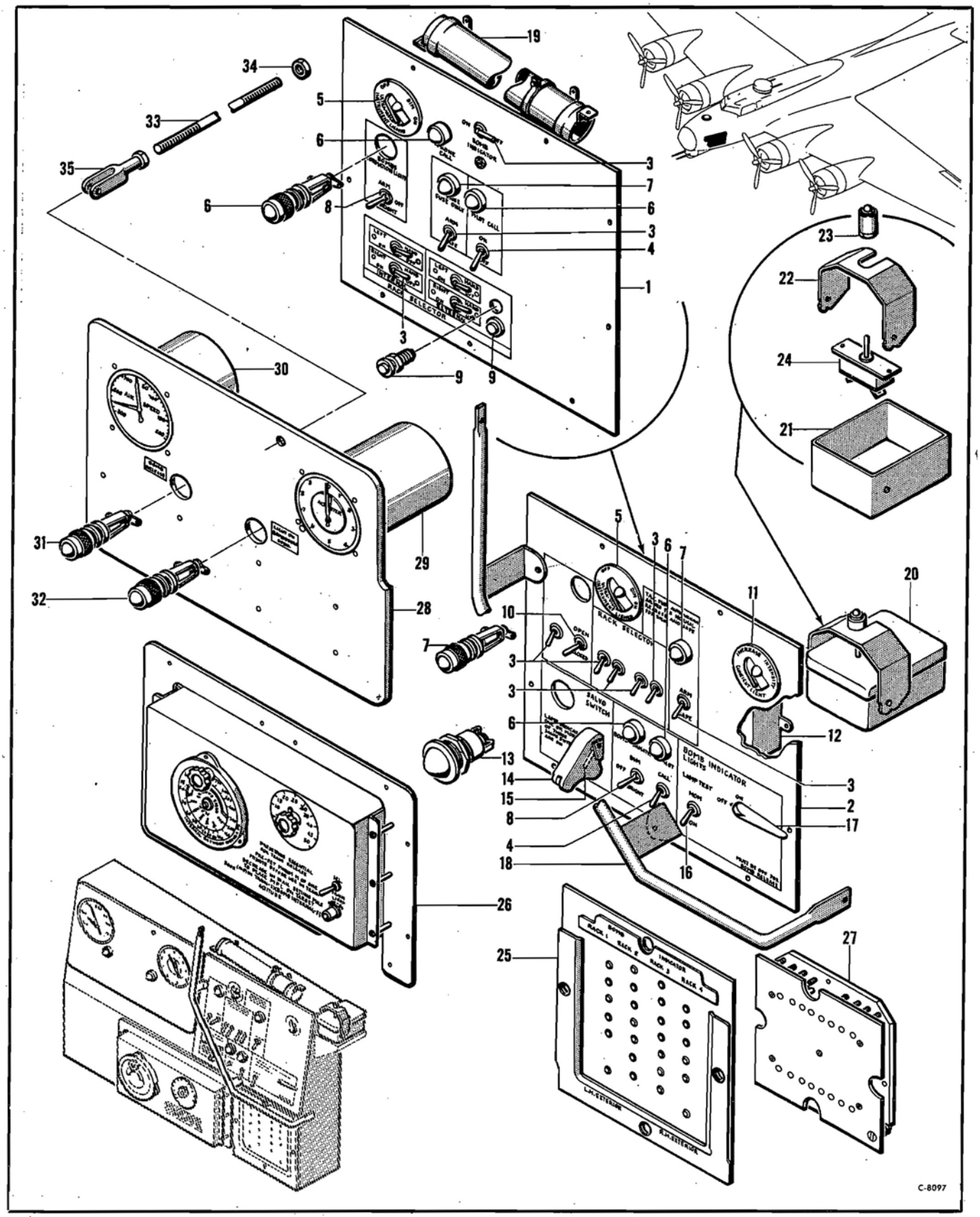

Figure 116—Bomber's Control and Instrument Panel

PUBLISHED BY AVIALOGS.COM

FUSELAGE

Bombers Control and Instrument Panel

Figure & Index No.	Part Number	1 2 3 4 5 6 7 Nomenclature	Usage Code	Units Per Assy.
		Bombers Control and Instrument Panel		
	55-7351	Installation—Bombers control panel (see fig. 110)	All	NP
	6-12609-7	Panel Assembly—Bombers control	HA	1
	6-12609-6	Panel Assembly—Bombers control	SH	1
	6-12609-12	Panel Assembly—Bombers control	OI	1
	6-12609-13	Panel Assembly—Bombers control	XI	1
	6-12609-11	Panel Assembly—Bombers control	QM	1
	6-12609-14	Panel Assembly—Bombers control	EO	1
	6-12609-15	Panel Assembly—Bombers control	PQ	1
116-1	6-12607-7	Plate Assembly—Bombers control	HA	1
2	9-7342	Plate Assembly—Bombers control	XH	1
	9-7342-2	Plate Assembly—Bombers control	QM	1
	9-7342-4	Plate Assembly—Bombers control	EO	1
	9-7342-6	Plate Assembly—Bombers control	PQ	1
3	AN3022-2B	Switch—Single pole toggle	All	6
4	AN3022-8B	Switch—Single pole toggle	All	1
5	1-22746-1	Control Assembly	QB	1
6	42B3593-2	Lamp Assembly (amber)	All	3
7	42B3593-1	Lamp Assembly (red)	All	2
8	39A2512	Switch Assembly (Type C-2)	All	1
9	40A7419-1	Lamp Assembly	HA	2
10	AN3022-7B	Switch—Single pole toggle	JI	1
11	NO NUMBER	Rheostat (Spec 94-32229D) (Type O-1C) GFE	XM	1
12	CA275X	Condenser (P.R. Mallory and Co.)	OI	1
13	275	Lamp Assembly (Drake Mfg. Co.)	JI	1
14	3-24506	Guard—Toggle switch	JI	1
15	39A2511	Switch (Type C-1)	JI	1
16	8715	Switch Assembly (Cutler-Hammer)	JI	1
17	TLS26	Switch Assembly (P. R. Mallory and Co.)	JI	1
18	14-3740	Rail Assembly—Panel guard	AL	1
19	0956	Resistor (Ohmite Mfg. Co.)	JI	1
20	3-12023	Shield Assembly—Bomb release	WM	1
	3-12023-4	Shield Assembly—Bomb release	PQ	1
21	41-9981-1	Shield Assembly—Junction box	XM	1
22	1-19823	Guard Assembly	XM	1
23	24-1164	Extension—Lever (Cutler-Hammer)	XM	1
	1-29254	Spring—Latch	XM	1
	21-2366-32-11	Washer	XM	2
24	AN3022-7B	Switch—Single pole toggle	XM	1
	56-7180	Panel Assembly—Bomb load indicator	HA	1
	56-7180-504	Panel Assembly—Bomb load indicator	JI	1
25	56-7180-501	Plate Assembly	HA	1
	56-7180-505	Plate Assembly	JI	1
	39A3906-2	Lamp—Warning signal GFE	All	59
26	6-9216-7	Panel Assembly—Bomb interval switch	UD	1
	6-9216-5	Panel Assembly—Bomb interval switch	IK	1
	NO NUMBER	Control Assembly—Bomb release (Spec 93-24717) (Type B-3) GFE	UD	1
	NO NUMBER	Control Assembly—Bomb release (Spec 93-24630) (Type B2A) GFE	IK	1
27	6-10107	Panel Assembly—Bomb indicator	HA	1
	1110	Contact Assembly (Korry Mfg. Co.)	HA	42
	6-15547	Panel Assembly—Bomb indicator	JI	1
	1110	Contact Assembly (Korry Mfg. Co.)	JI	26
	84-1611	Installation—Bombers instrument panel	All	NP
	84-1611-706	Panel Assembly	HA	1
	84-1611-707	Panel Assembly	JI	1
28	6-13846	Panel Assembly	HA	1
	6-13846-11	Panel Assembly	JI	1
29	AN5760-2	Altimeter—Pressure GFE	All	1
30	NO NUMBER	Indicator—Air speed (Spec 94-27335) (Type F-2) (Spec 94-27952A Type C-14 optional) GFE	MA	1
	NO NUMBER	Indicator—Air speed (Spec 94-27916) (Type F-1) (Spec 94-27335 Type F-2 optional) GFE	RI	1
31	42B3593-1	Lamp Assembly (red)	HA	1
32	42B3593-2	Lamp Assembly (amber)	HA	1
	74-1611-707	Lamp GFE	HA	2
33	74-1611-1	Rod	All	1
34	AN316-4R	Nut—Aircraft	All	2
35	AN486-3	Clevis—Rod end adjusting	All	1
	41-6813	Cup—Bolt	All	1
	34A1766D2	Washer	All	8

PUBLISHED BY AVIALOGS.COM

FUSELAGE

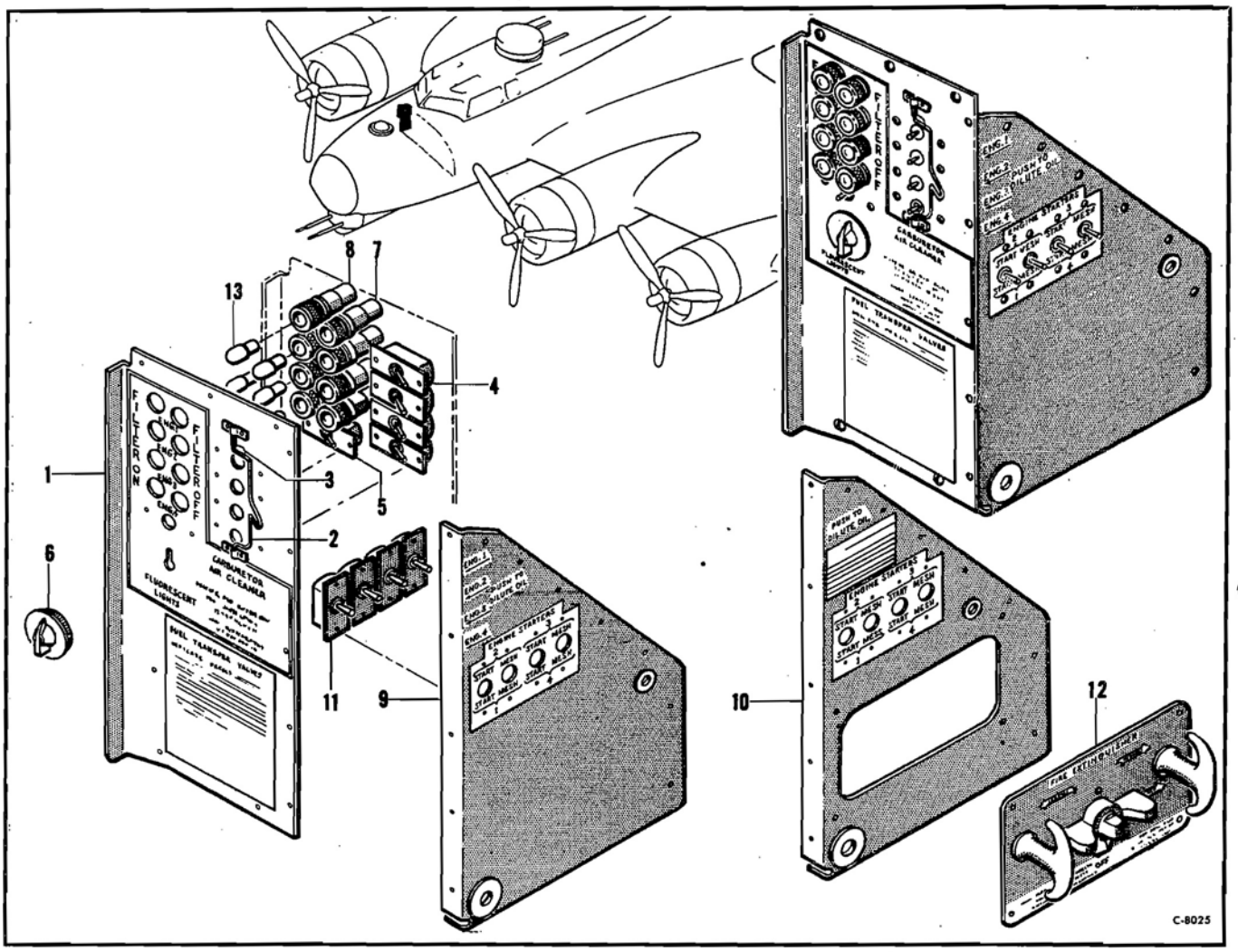

Figure 117—Auxiliary Control Board Panel

Auxiliary Control Board Panel

Figure & Index No.	Part Number	1 2 3 4 5 6 7 Nomenclature	Usage Code	Units Per Assy.
	59-1847-509	Installation—Auxiliary control board panel	All	NP
	59-1847-519	Plate Assembly—Side	OA	1
	59-1847-524	Plate Assembly—Side	XI	1
	59-1847-520	Plate Assembly—Side	XM	1
117-1	56-4252-511	Plate Assembly	OA	1
	56-4252-516	Plate Assembly	XI	1
	56-4252-514	Plate Assembly	XM	1
2	1-29236	Lever—Control switch	All	1
3	1-29238	Spring—Switch lever	All	1
	1-29325	Support—Switch lever	All	1
4	AN3022-8B	Switch—Single pole toggle	All	4
5	AN3022-2B	Switch—Single pole toggle	All	1
6	1-22746-1	Lamp Assembly—Fluorescent	QB	1
7	42B3593-3	Lamp Assembly (green)	All	4
8	42B3593-2	Lamp Assembly (amber)	All	4
	59-1847-513	Panel Assembly—Rear	OA	1
	59-1847-523	Panel Assembly—Rear	IJ	1
	59-1847-526	Panel Assembly—Rear	PQ	1
9	56-4251-505	Panel Assembly	OA	1
10	56-4251-509	Panel Assembly	KJ	1
11	AN3022-7B	Switch Assembly—Single pole toggle	All	4
12	2CD5016	Panel Assembly—Control GFE (American LaFrance-Foamite Corp.) (see fig. 135)	KJ	1
13	AN3121-313	Lamp GFE	All	8

PUBLISHED BY AVIALOGS.COM

FUSELAGE

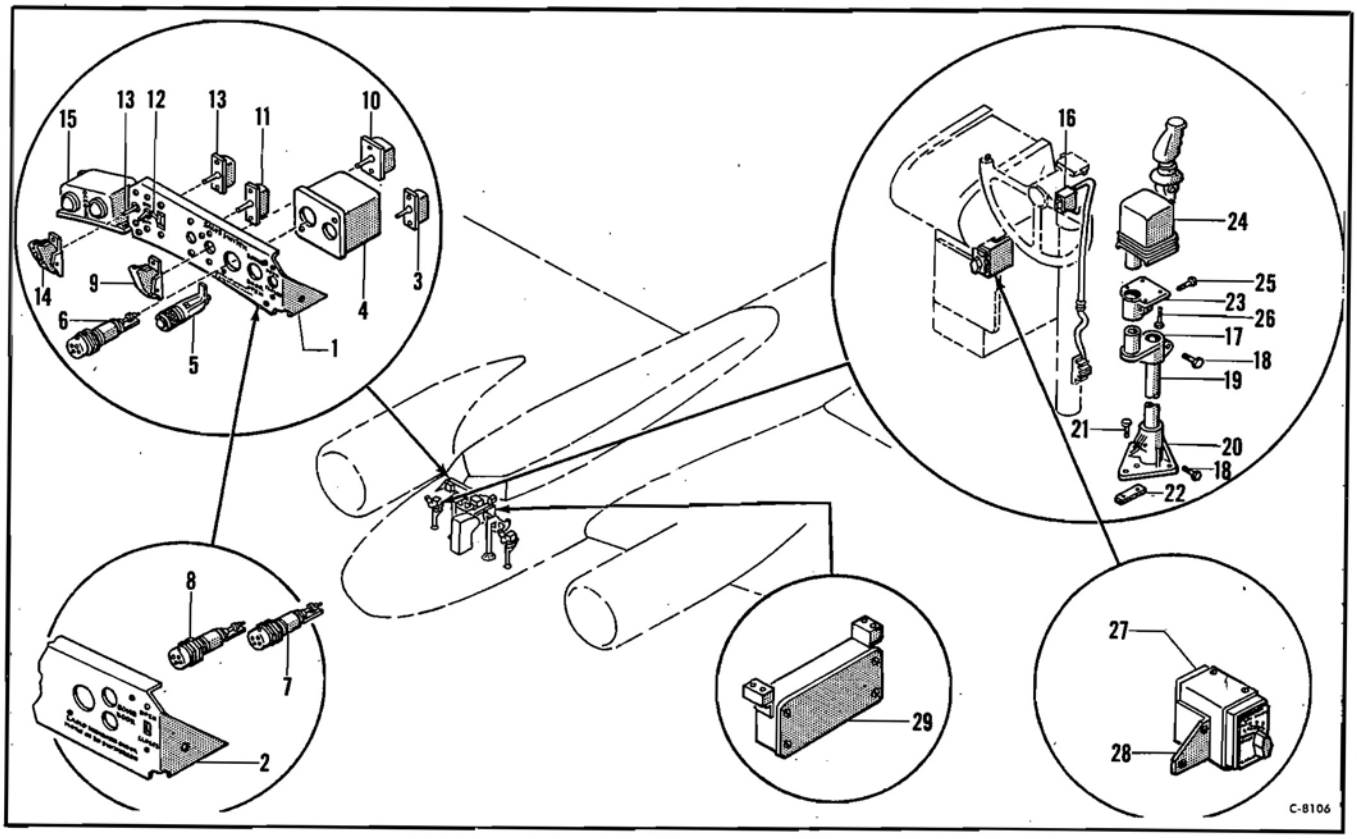

Figure 118—Switch Panel and Formation Stick Equipment

Switch Panel and Formation Stick Equipment

Figure & Index No.	Part Number	1 2 3 4 5 6 7 Nomenclature	Usage Code	Units Per Assy.
		Switch Panel and Formation Stick Equipment		
	14-4065	Installation—Switch panel (see fig. 111)	CQ	NP
	14-4065-1	Switch Assembly	BQ	1
	14-4065-3	Switch Assembly	PQ	1
118-1	6-19424	Bracket—Switch	BQ	1
2	6-19424-1	Bracket—Switch	PQ	1
3	AN3022-7B	Switch—Single pole toggle	CQ	1
4	41-9981	Shield Assembly	CQ	1
5	42B3593-1	Lamp Assembly (red)	BQ	1
6	109GGR	Light Assembly (Korry Mfg. Co.)	CQ	1
	AN3121-313	Lamp—T3 1-4 single-contact GFE	CQ	2
7	109SA	Lamp Assembly (Korry Mfg. Co.)	PQ	1
8	109SR	Lamp Assembly (Korry Mfg. Co.)	PQ	1
9	3-24506	Guard	CQ	1
10	39A2511	Switch	CQ	1
11	AN3022-1B	Switch—Single pole toggle	CQ	1
12	AN3160-20A	Circuit Breaker—Switch type	CQ	1
13	AN3022-2B	Switch—Single pole toggle	CQ	2
14	49-1356-2	Guard (Cutler-Hammer)	CQ	1
15	9-5058-7	Switch Assembly	CQ	1
	BC765	Switch GFE	CQ	1
	14-4099	Installation—Formation stick equipment (see fig. 111)	PQ	NP
	9-10632	Installation—Automatic pilot release switch (LH)	PQ	NP
	9-10632-1	Installation—Automatic pilot release switch (RH)	PQ	NP
16	407969A	Switch Assembly (Minneapolis-Honeywell) GFE	PQ	1
	15-17162	Installation—Formation stick	PQ	NP
	15-17162-2	Pedestal Assembly	PQ	2
17	408250	Arm—Formation stick offset (Minneapolis-Honeywell)	PQ	1
18	AN4-10A	Bolt—Aircraft	PQ	2
19	408263	Tube—Formation stick pedestal (Minneapolis-Honeywell)	PQ	1
20	408188	Base—Formation stick pedestal (Minneapolis-Honeywell)	PQ	1
21	AN3-6A	Bolt—Aircraft (used on RH side only)	PQ	4
	AN3-7A	Bolt—Aircraft (used on LH side only)	PQ	4
22	15-17162-1	Filler	PQ	1
	15-17162-3	Stick Assembly—Formation	PQ	2
23	408101	Bracket—Formation stick base mounting (Minneapolis-Honeywell)	PQ	1
24	G1080A3	Stick—Formation (Minneapolis-Honeywell) GFE	PQ	1
25	AN4-10A	Bolt—Aircraft	PQ	1
26	AN4-5A	Bolt—Aircraft	PQ	4
	9-10644	Installation—Function selector	PQ	NP
	9-10644-1	Selector Assembly	OQ	1
	9-10644-2	Bracket Assembly—Selector	BR	1
27	G1235A1CA1	Selector—Function (Minneapolis-Honeywell) GFE	OQ	1
	G1235B1CA1	Selector—Function (Minneapolis-Honeywell) GFE	BR	1
28	6-22019	Bracket Assembly—Selector	PQ	1
	9-10619	Installation—Formation stick shield	PQ	NP
29	G1081B1	Box—Junction (Minneapolis-Honeywell) GFE	PQ	1

PUBLISHED BY AVIALOGS.COM

FUSELAGE

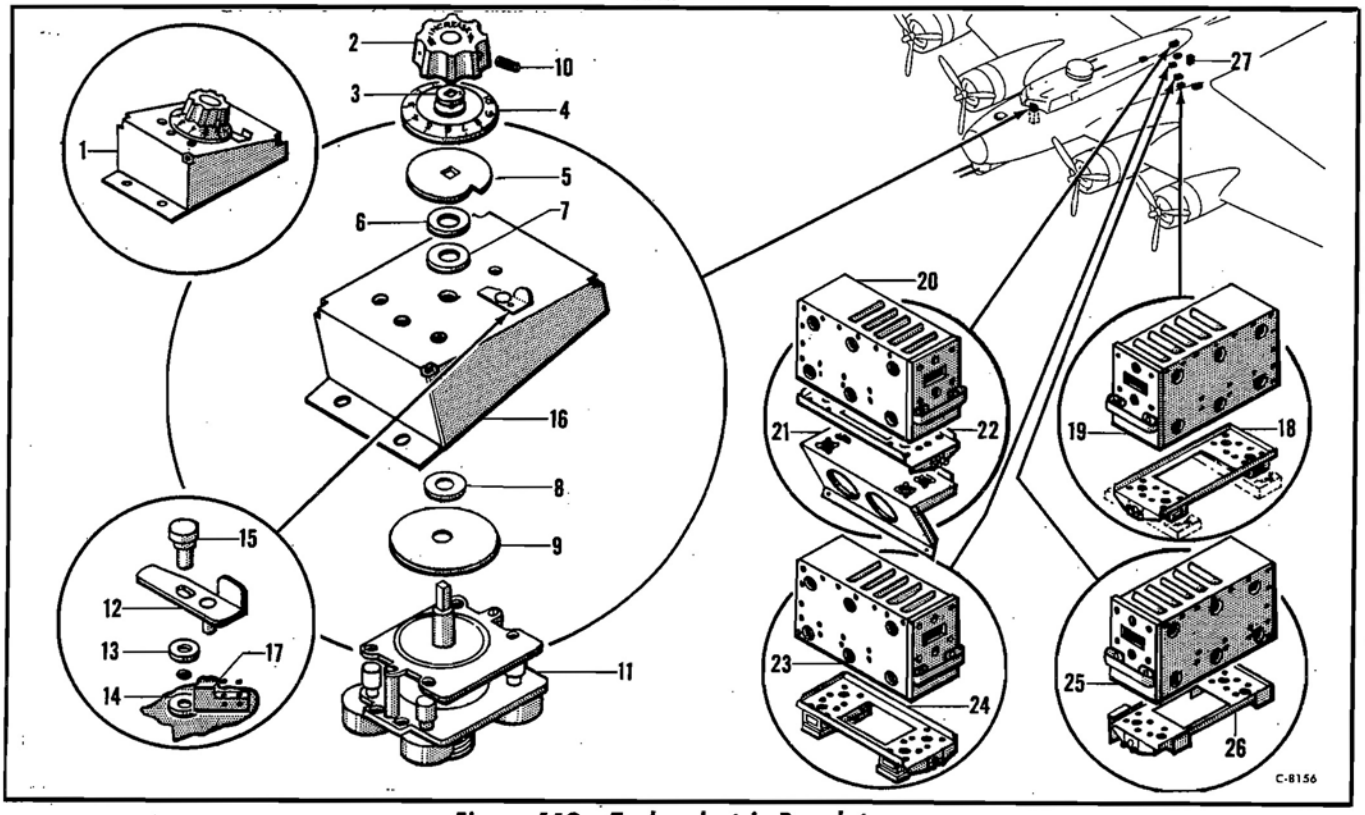

Figure 119—Turbo-electric Regulator

Turbo-electric Regulator

Figure & Index No.	Part Number	1 2 3 4 5 6 7 Nomenclature	Usage Code	Units Per Assy.
	15-11177	Installation—Turbo-electric regulator	All	NP
	15-11676	Installation—Turbo-electric selector	ZE	NP
119-1	6-15229	Selector Assembly—Turbo	YE	1
	6-15229-5	Selector Assembly—Turbo	ZQ	1
2	406862	Knob—Dial (Minneapolis-Honeywell) GFE	ZE	1
3	6-15229-3	Washer—Spring	ZE	1
4	407156	Dial (Minneapolis-Honeywell) GFE	ZE	1
5	407212	Stop—Dial (Minneapolis-Honeywell) GFE	ZE	1
6	407169	Disc—Friction (Minneapolis-Honeywell) GFE	ZE	1
7	407164	Washer—Friction (Minneapolis-Honeywell) GFE	ZE	1
8	407155	Washer (Minneapolis-Honeywell) GFE	ZE	1
9	407172	Cover (Minneapolis-Honeywell) GFE	ZE	1
10	80581	Screw—Set (Minneapolis-Honeywell) GFE	ZE	1
11	6-15229-2	Selector Assembly	ZE	1
	6-15229-1	Support Assembly	YE	1
	6-15229-6	Support Assembly	ZQ	1
12	407217A	Pin and Latch Assembly (Minneapolis-Honeywell) GFE	ZE	1
13	407214	Washer (Minneapolis-Honeywell) GFE	ZE	1
14	407216	Washer—Burr (Minneapolis-Honeywell) GFE	ZE	1
15	407215	Pivot (Minneapolis-Honeywell) GFE	ZE	1
16	6-14979	Support Assembly—Turbo-selector	LE	1
	6-14979-1	Support Assembly—Turbo-selector	WG	1
17	1-30453-1	Spring—Turbo-selector	YE	1
	3-33728	Spring—Turbo-selector	ZQ	1
	9-6473	Installation—Turbo-electric amplifier	TE	NP
18	9-6473-2	Base Assembly	TE	2
	G1060A1CA1	Base—Amplifier (Minneapolis-Honeywell) GFE	TE	1
19	G403A1CA1	Amplifier (Minneapolis-Honeywell) GFE	TE	2
	9-9199	Installation—Turbo-electric amplifier (LH)	EN	NP
	9-9199-1	Installation—Turbo-electrid amplifier (RH)	EN	NP
20	G403A1CA1	Amplifier (Minneapolis-Honeywell) GFE	EN	1
	9-9199-2	Support Assembly (LH)	EN	1
	9-9199-3	Support Assembly (RH)	EN	1
21	9-9191	Bracket—Amplifier	EN	1
22	G1060A1CA1	Base—Amplifier (Minneapolis-Honeywell) GFE	EN	1
	9-7049	Installation—Turbo control amplifier (stowage)	TE	NP
	6-19474	Installation—Turbo-electric amplifier (stowage)	EN	NP
23	G403A	Amplifier (Minneapolis-Honeywell) GFE	TE	1
	G403A1CA1	Amplifier (Minneapolis-Honeywell) GFE	EN	1
24	6-15854	Base Assembly—Turbo amplifier	TE	1
	G1060A1CA1	Base—Amplifier (Minneapolis-Honeywell) GFE	EN	1
	9-6048	Installation—Turbo-electric amplifier (LH)	ZE	NP
	9-6048-1	Installation—Turbo-electric amplifier (RH)	ZE	NP
25	G403A1CA1	Amplifier (Minneapolis-Honeywell) GFE	ZE	1
26	G1060A1CA1	Base—Amplifier (Minneapolis-Honeywell) GFE	ZE	1
	6-14768	Installation—Turbo-electric junction box (main)	ZE	NP
27	G1066A1CA1	Box—Junction (Minneapolis-Honeywell) GFE	ZE	1

PUBLISHED BY AVIALOGS.COM

FUSELAGE

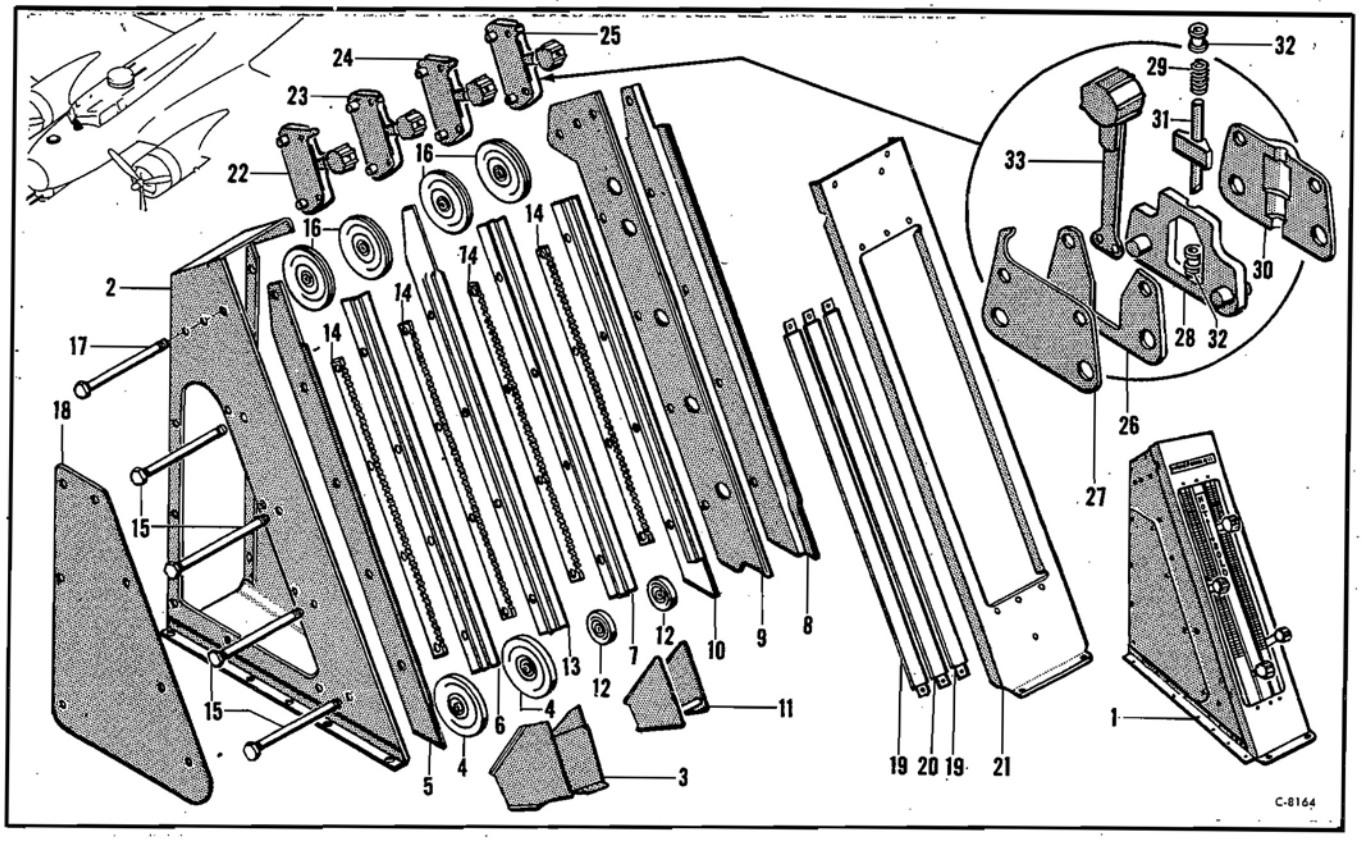

Figure 120—Intercooler Temperature Control Stand Assembly

Intercooler Temperature Control Stand Assembly

Figure & Index No.	Part Number	1 2 3 4 5 6 7 Nomenclature	Usage Code	Units Per Assy.
120-1	55-6070-400	Stand Assembly—Intercooler temperature control (see fig. 197)	All	Ref
	55-6070-2	Frame Assembly—Intercooler temperature	All	1
2	55-6070-404	Angle Assembly—Intercooler frame	All	1
	15-6146	Installation—Carburetor air stand track	All	NP
	15-6146-1	Track Assembly—Carburetor air stand	All	1
	15-6146-17	Track Assembly—Carburetor air stand	All	1
	6-8006	Installation—Carburetor air bracket	All	NP
3	6-8006-1	Bracket Assembly—Carburetor air	All	1
4	AN210-2A	Pulley—Anti-friction bearing control	All	2
5	15-6146-4	Track	All	1
6	15-6146-15	Track	All	1
7	15-6146-15	Track	All	1
	15-6146-16	Channel Assembly	All	1
	15-6146-19	Channel Assembly	All	1
8	15-6146-2	Channel	All	1
9	15-6146-3	Angle	All	1
10	15-6146-18	Track	All	1
	6-7988	Installation—Carburetor air bracket	All	NP
11	6-7988-2	Plate Assembly	All	1
12	AN210-1A	Pulley—Anti-friction bearing control	All	2
13	15-6146-14	Track	All	1
14	3-11957	Rack—Carburetor air control	All	4
15	AN3-50A	Bolt—Aircraft	All	4
16	AN210-2A	Pulley—Anti-friction bearing control	All	4
17	21-9373-81-75	Bolt	All	1
18	55-6070-8	Cover—Frame	All	1
19	55-6070-4	Strip Assembly—Cover	All	2
20	55-6070-5	Strip Assembly—Cover	All	1
21	55-6070-401	Cover Assembly—Plate	All	1
22	3-11579	Control Assembly—Carburetor air	All	1
23	3-11579-1	Control Assembly—Carburetor air	All	1
24	3-11579-2	Control Assembly—Carburetor air	All	1
25	3-11579-3	Control Assembly—Carburetor air	All	1
26	41-9055	Plate—Control	All	1
27	41-9117-1	Plate—Control	All	1
	3-11579-5	Plunger Assembly—Carburetor air control	All	1
28	41-9111	Plate Assembly—Carburetor air control	All	1
	41-9113	Bearing Assembly—Carburetor air control	All	2
29	41-8453	Spring—Compression	All	1
30	41-9108	Casting—Carburetor air control	All	1
31	41-9114	Plunger—Carburetor air control	All	1
32	41-9115	Bushing—Carburetor air control	All	2
33	41-9048	Knob Assembly—Carburetor air (used on 3-11579)	All	1
	41-9048-1	Knob Assembly—Carburetor air (used on 3-11579-1)	All	1
	41-9048-2	Knob Assembly—Carburetor air (used on 3-11579-2)	All	1
	41-9048-3	Knob Assembly—Carburetor air (used on 3-11579-3)	All	1

PUBLISHED BY AVIALOGS.COM

FUSELAGE

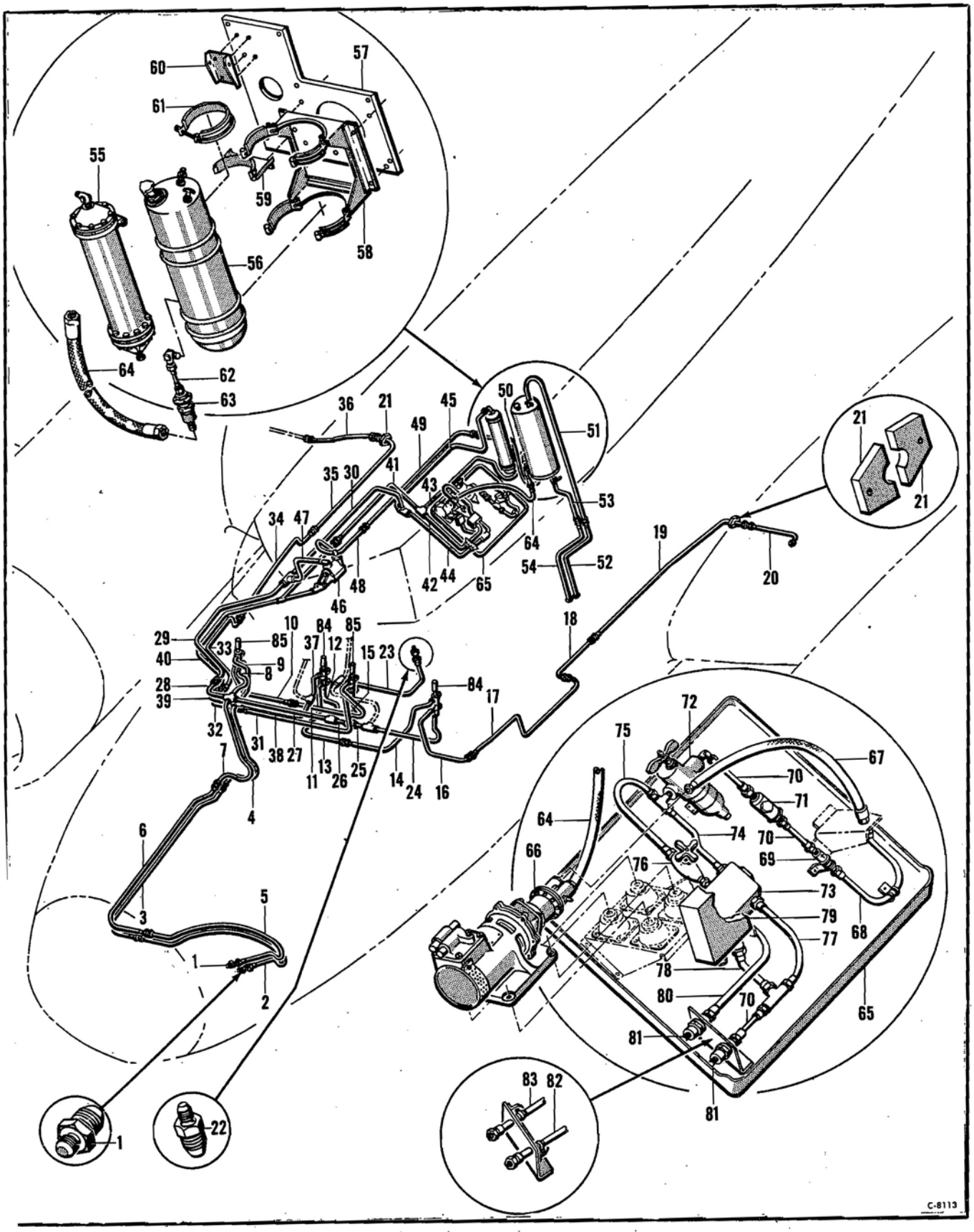

Figure 121—Fuselage Hydraulic System

PUBLISHED BY AVIALOGS.COM

FUSELAGE

Fuselage Hydraulic System

Figure & Index No.	Part Number	1 2 3 4 5 6 7 Nomenclature	Usage Code	Units Per Assy.
		Fuselage Hydraulic System		
	15-9272	Installation—Hydraulic system	All	NP
	15-11421	Installation—Bendix turret tubing	RA	NP
121-1	1-29092	Fitting—Adapter	RA	2
2	15-11421-5	Tube Assembly	RA	1
3	15-11421-3	Tube Assembly	RA	1
4	15-11421-2	Tube Assembly	RA	1
5	15-11421-6	Tube Assembly	RA	1
6	15-11421-4	Tube Assembly	RA	1
7	15-11421-1	Tube Assembly	RA	1
8	15-9272-96	Tube Assembly	All	1
9	15-7988-24	Tube Assembly	All	1
10	65-5821-582	Tube Assembly	All	1
11	15-7988-21	Tube Assembly	All	1
12	65-5821-578	Tube Assembly	All	1
13	65-5821-594	Tube Assembly	All	1
14	15-7988-14	Tube Assembly	All	1
15	65-5821-44	Tube Assembly	All	1
16	15-7988-9	Tube Assembly	All	1
17	15-7988-8	Tube Assembly	All	1
18	15-7988-7	Tube Assembly	All	1
19	65-5821-527	Tube Assembly	All	1
20	15-7988-5	Tube Assembly	All	1
21	41-9290-3	Fairlead—Tube support	All	4
22	2-1942-18	Fitting—Restriction (Parker)	All	1
23	15-7988-59	Tube Assembly	QB	1
	15-9272-97	Tube Assembly	XM	1
24	15-7988-12	Tube Assembly	All	1
25	65-5821-555	Tube Assembly	All	1
26	65-5821-32	Tube Assembly	All	1
27	65-5821-577	Tube Assembly	All	1
28	15-7988-26	Tube Assembly	All	1
29	15-7988-31	Tube Assembly	All	1
30	15-9272-74	Tube Assembly	All	1
31	15-7988-19	Tube Assembly	All	1
32	15-7988-28	Tube Assembly	All	1
33	15-7988-29	Tube Assembly	All	1
34	15-7988-36	Tube Assembly	QB	1
	15-9272-100	Tube Assembly	XM	1
35	65-5821-535	Tube Assembly	QB	1
	15-9272-101	Tube Assembly	XM	1
36	15-7988-46	Tube Assembly	QB	1
	15-9272-102	Tube Assembly	XM	1
37	65-5821-556	Tube Assembly	All	1
38	15-7988-23	Tube Assembly	All	1
39	15-7988-27	Tube Assembly	All	1
40	15-7988-30	Tube Assembly	All	1
41	15-9272-72	Tube Assembly	All	1
42	15-9272-89	Tube Assembly	All	1
43	15-9272-93	Tube Assembly	All	1
44	15-9272-88	Tube Assembly	All	1
45	15-9272-85	Tube Assembly	All	1
	6-10486	Installation—Hydraulic hand pump	All	NP
	6-10486-1	Pump Assembly	RC	1
	6-10486-3	Pump Assembly	TP	1
46	D10231	Pump—Hydraulic hand (Adel) (see fig. 124)	RC	1
	66-25507	Pump—Hydraulic hand (Harvill)	TP	1
47	15-7988-33	Tube Assembly	All	1
48	15-7988-34	Tube Assembly	All	1
49	15-9272-41	Tube Assembly	All	1
50	15-9272-92	Tube Assembly	All	1
51	15-9272-31	Tube Assembly	All	1
52	15-7988-58	Tube Assembly	All	1
53	15-9272-33	Tube Assembly	All	1
54	15-7988-45	Tube Assembly	All	1
	15-13053	Installation—Hydraulic system tank and accumulator	All	NP
	15-13053-1	Equipment Assembly	All	1
	15-13053-3	Tank Assembly	All	1
55	6-13191-2	Accumulator Assembly (see fig. 123)	All	1
	15-13053-2	Tank Assembly	All	1
56	6-10440-12	Tank Assembly—Hydraulic reservoir (see fig. 123)	All	1
	765-2	Cock—Drain	All	1
57	6-14478	Support Assembly—Hydraulic tank and accumulator	All	1
58	9-3720	Bracket Assembly—Hydraulic tank	All	1
	1-21077	Strap Assembly—Hydraulic tank support	EA	4
	3-18559-3	Strap—Hydraulic tank support	QH	4
	1-17910-0	Filler—Strap end	EA	4

PUBLISHED BY AVIALOGS.COM

FUSELAGE

Fuselage Hydraulic System

Figure & Index No.	Part Number	1 2 3 4 5 6 7 Nomenclature	Usage Code	Units Per Assy.
	1-27935-2	Spacer—Support strap	QH	4
121-59	6-10481	Bracket Assembly—Accumulator	All	1
60	3-19510	Bracket—Accumulator support	All	1
61	3-14934	Strap Assembly—Accumulator	All	1
	1-17910-1-0	Spacer	Y	2
	1-27935	Spacer	WG	2
62	15-13053-4	Tube Assembly	All	1
63	106-8	Coupling—Self sealing (Aeroquip)	All	1
64	39B3480-816	Hose Assembly	All	1
	15-7989	Installation—Hydraulic panel	All	NP
	15-7989-28	Panel Assembly	All	1
65	15-8752-4	Pan Assembly—Hydraulic panel	All	1
	14-2878	Pan Assembly—Hydraulic panel	All	1
66	IE678	Pump—Hydraulic (Pesco) (see fig. 126)	All	1
67	43D2475-8D160	Hose Assembly	All	1
	39B1024-8	Nut—Hose check	All	2
68	15-7989-26	Tube	All	1
69	401561	Valve—Check (Bendix)	All	1
70	15-7989-5	Tube	All	3
71	5291-1T8D	Connection—Suction test (Parker) (see fig. 125)	All	1
72	27250	Purolator Assembly (Purolator) (see fig. 55)	All	1
73	7-500-8-1	Valve—Relief (Kenyon) (see fig. 125)	All	1
74	15-7989-21	Tube	All	1
75	15-7989-22	Tube	All	1
76	251-2GT8D	Valve—Shut-off (Parker) (see fig. 125)	All	1
77	15-7989-25	Tube	All	1
	8-8-6JTD	Tee (Parker)	All	1
78	15-7989-23	Tube	All	1
79	151	Switch Assembly—Pres regulating (Starbird)	All	1
80	15-7989-24	Tube	PD	1
81	106-8	Coupling—Self sealing (Aeroquip)	PD	2
82	15-7989-29	Tube	HF	1
83	15-7989-30	Tube	HF	1
84	3-9584-4	Valve Assembly—Wheel brake (see fig. 93)	All	Ref
85	3-9584-5	Valve Assembly—Wheel brake (see fig. 93)	All	Ref

FUSELAGE

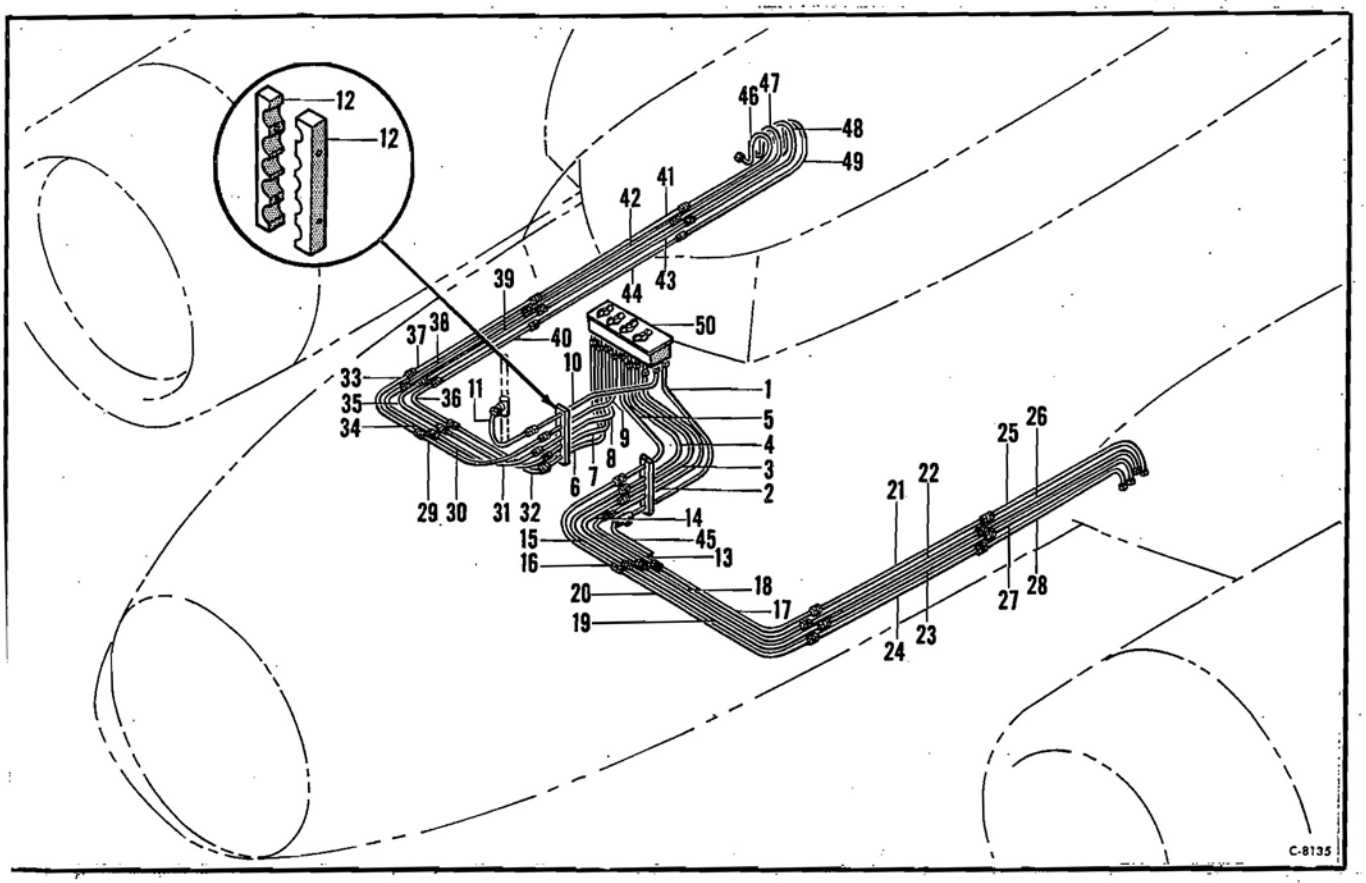

Figure 122—Cowl Flap System

RESTRICTED
PUBLISHED BY AVIALOGS.COM

FUSELAGE

Cowl Flap System

Figure & Index No.	Part Number	1 2 3 4 5 6 7 Nomenclature	Usage Code	Units Per Assy.
		Cowl Flap System		
	15-9272	Installation—Hydraulic system	All	NP
	55-7689	Installation—Cowl flaps tubing	All	NP
122-1	55-7689-400	Tube Assembly	All	1
2	55-7689-426	Tube Assembly	All	1
3	55-7689-425	Tube Assembly	All	1
4	55-7689-424	Tube Assembly	All	1
5	55-7689-423	Tube Assembly	All	1
6	55-7689-422	Tube Assembly	All	1
7	55-7689-421	Tube Assembly	All	1
8	55-7689-420	Tube Assembly	All	1
9	55-7689-419	Tube Assembly	All	1
10	55-7689-401	Tube Assembly	All	1
11	55-7689-428	Tube Assembly	All	1
12	1-19005-7	Fairlead Assembly—5 holes	All	2
13	55-7689-402	Tube Assembly	All	1
14	55-7689-404	Tube Assembly	All	1
15	55-7689-405	Tube Assembly	All	1
16	55-7689-403	Tube Assembly	All	1
17	55-7689-414	Tube Assembly	QB	1
	55-7689-459	Tube Assembly	XM	1
18	55-7689-413	Tube Assembly	QB	1
	55-7689-458	Tube Assembly	XM	1
19	55-7689-412	Tube Assembly	QB	1
	55-7689-456	Tube Assembly	XM	1
20	55-7689-411	Tube Assembly	QB	1
	55-7689-457	Tube Assembly	XM	1
21	15-7689-73	Tube Assembly	All	1
22	15-7689-28	Tube Assembly	All	1
23	15-7689-110	Tube Assembly	All	1
24	15-7689-139	Tube Assembly	All	1
25	15-7689-74	Tube Assembly	All	1
26	15-7689-29	Tube Assembly	All	1
27	15-7689-111	Tube Assembly	All	1
28	15-7689-140	Tube Assembly	All	1
29	55-7689-409	Tube Assembly	N	1
	55-7689-466	Tube Assembly	WF	1
30	55-7689-408	Tube Assembly	N	1
	55-7689-467	Tube Assembly	WF	1
31	55-7689-406	Tube Assembly	N	1
	55-7689-468	Tube Assembly	WF	1
32	55-7689-407	Tube Assembly	N	1
	55-7689-469	Tube Assembly	WF	1
33	55-7689-415	Tube Assembly	All	1
	55-7689-466	Tube Assembly	All	1
34	55-7689-416	Tube Assembly	All	1
	55-7689-467	Tube Assembly	All	1
35	55-7689-417	Tube Assembly	All	1
	55-7689-468	Tube Assembly	All	1
36	55-7689-418	Tube Assembly	All	1
	55-7689-469	Tube Assembly	All	1
37	15-7689-126	Tube Assembly	All	1
38	15-7689-94	Tube Assembly	All	1
39	15-7689-4	Tube Assembly	All	1
40	15-7689-52	Tube Assembly	All	1
41	15-7689-127	Tube Assembly	All	1
42	15-7689-95	Tube Assembly	All	1
43	15-7689-5	Tube Assembly	All	1
44	15-7689-53	Tube Assembly	All	1
45	55-7689-427	Tube Assembly	All	1
46	15-7689-128	Tube Assembly	All	1
47	15-7689-96	Tube Assembly	All	1
48	15-7689-6	Tube Assembly	All	1
49	15-7689-54	Tube Assembly	All	1
50	G10340	Valve—Cowl flap (Adel) (see fig. 112)	All	Ref

PUBLISHED BY AVIALOGS.COM

FUSELAGE

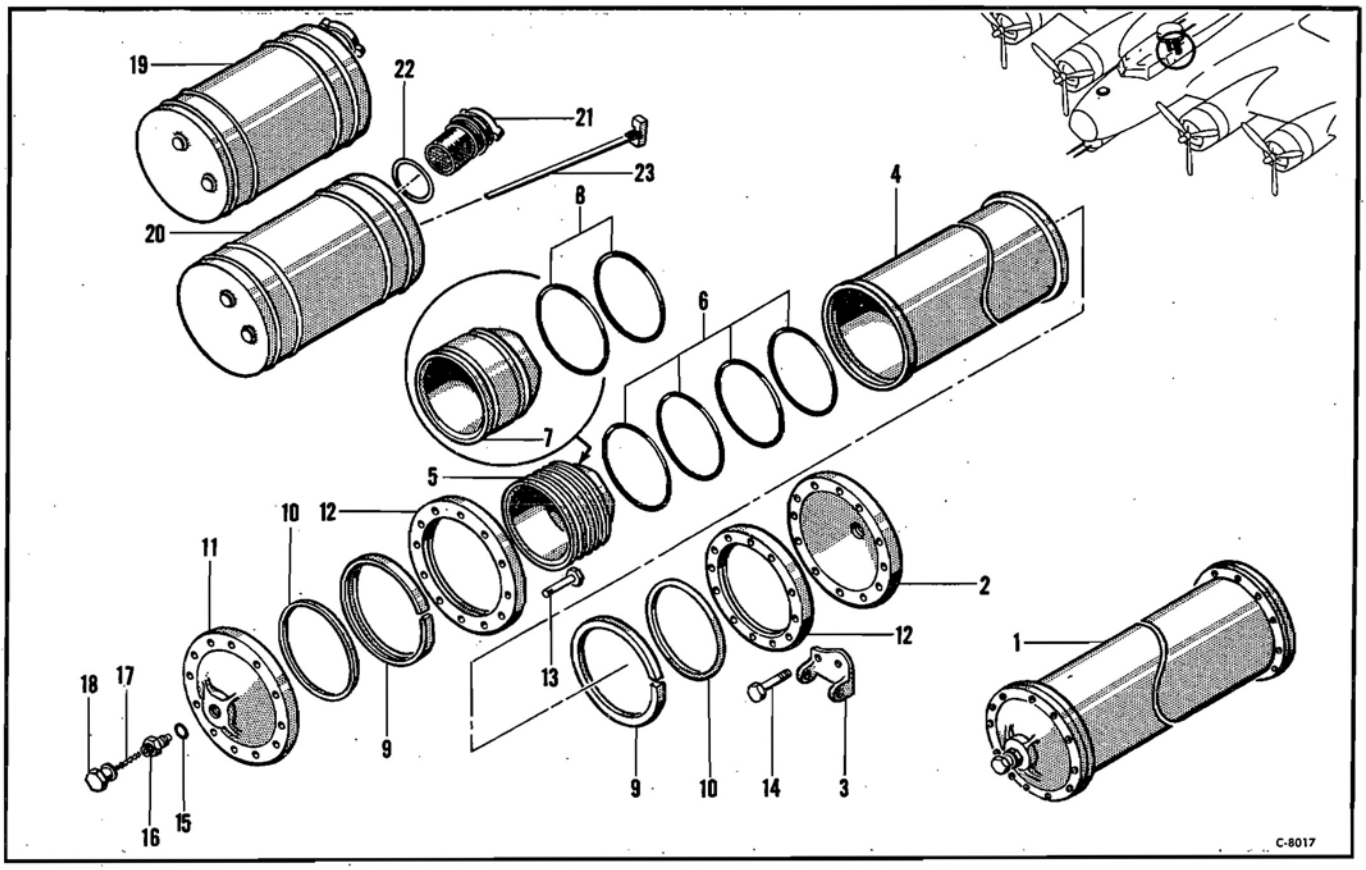

Figure 123—Accumulator and Reservoir Tank

Accumulator and Reservoir Tank

Figure & Index No.	*Part Number*	*1 2 3 4 5 6 7* *Nomenclature*	*Usage Code*	*Units Per Assy.*
		Accumulator and Reservoir Tank		
123-1	6-13191-2	Accumulator Assembly—Hyd system (see fig. 121)	All	Ref
2	3-14536-2	Head—Hydraulic accumulator	All	1
3	1-21444	Lug—Accumulator mount	All	1
4	6-10212-4	Cylinder—Hydraulic accumulator	All	1
5	3-14537	Piston—Hydraulic accumulator	T	1
6	3-14853	Ring—Hydraulic packing	T	4
7	3-14537-2	Piston—Hydraulic accumulator	NG	1
8	AN6227-49	Packing—"O" ring hydraulic	NG	2
9	1-20878	Ring—Split	All	2
10	1-20880	Gasket—Hydraulic accumulator	All	2
11	3-14536-3	Head—Hydraulic accumulator	All	1
12	3-14535	Clamp—Ring	All	2
13	AN5-14A	Bolt—Aircraft	All	22
14	AN5-16A	Bolt—Aircraft	All	2
15	AN901-5C	Gasket—Metal tube connection seal	All	1
16	AN812-1	Body—High pressure air valve	All	1
17	AN809-1	Core—High pressure air valve	All	1
18	AN813-1	Cap—High pressure air valve	All	1
19	6-10440-12	Tank Assembly—Hydraulic reservoir (see fig. 121)	All	Ref
20	6-10440-7	Shell Assembly	All	1
21	1-21345-1	Filler Assembly—Hydraulic tank	All	1
	1-12965	Nut—Tank filler unit	All	1
22	AN900-41	Gasket—Copper annular	All	1
23	1-27385	Stick—Hydraulic oil measuring	All	1

RESTRICTED
PUBLISHED BY AVIALOGS.COM

FUSELAGE

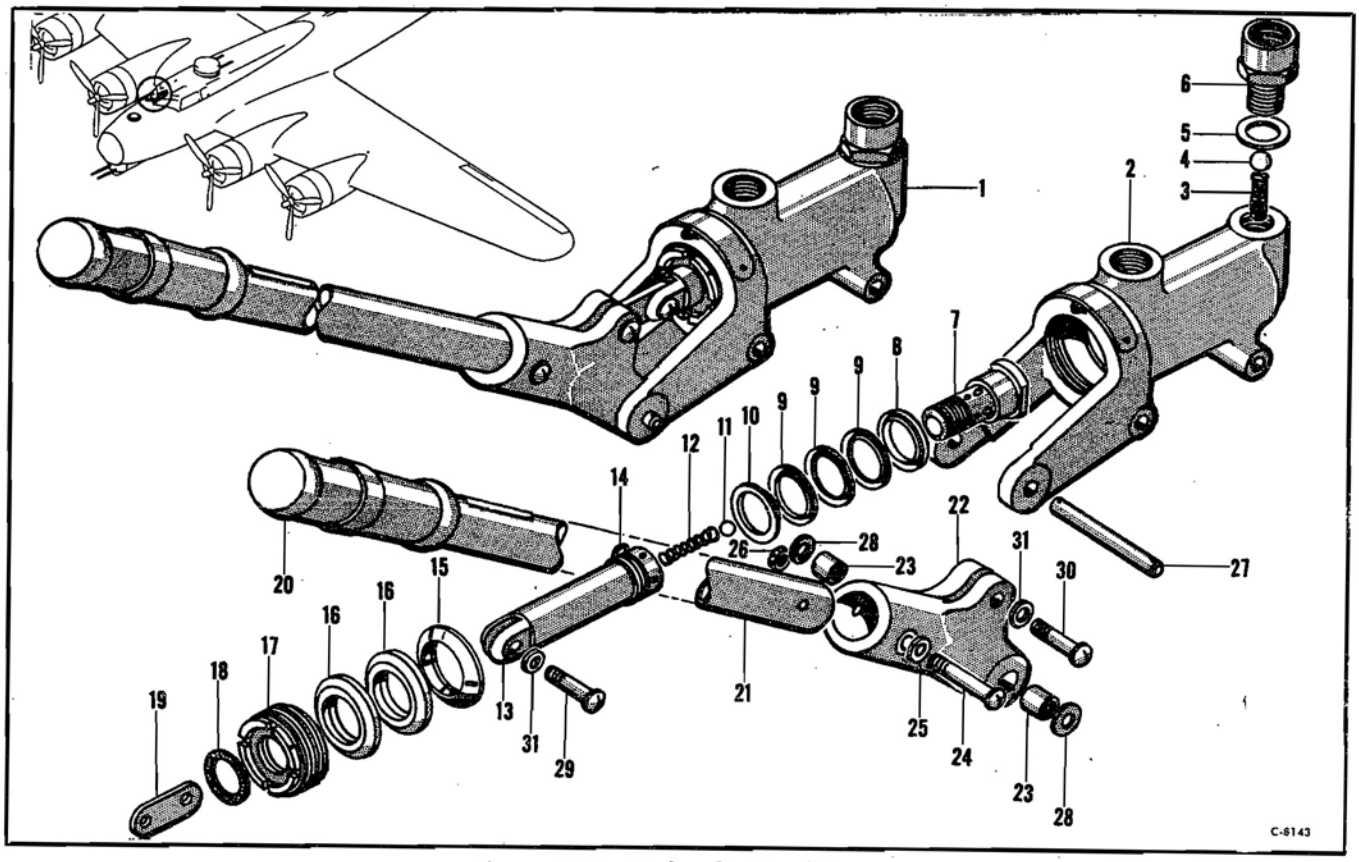

Figure 124—Hydraulic Hand Pump

Hydraulic Hand Pump

Figure & Index No.	*Part Number*	*1 2 3 4 5 6 7 Nomenclature*	*Usage Code*	*Units Per Assy.*
124-1	D10231	Pump—Hydraulic hand (Adel) (see fig. 121)	RC	Ref
2	B10031	Body	RC	1
3	A8113	Spring	RC	1
4	NO NUMBER	Ball—7-16 in. diameter	RC	1
5	A303-8A	Washer	RC	1
6	A10028	Seat	RC	1
	A8114	Piston Assembly	RC	1
7	A8098	Head—Piston	RC	1
8	A8096	Ring—Retaining	RC	1
9	40B629-6-024	Ring—"V"	RC	3
10	A8097	Ring—Retaining	RC	1
11	NO NUMBER	Ball—5-16 in. diameter	RC	1
12	A8103	Spring—Piston check valve	RC	1
13	B8092	Piston	RC	1
14	A8102	Ring—Piston head lock	RC	1
15	A8110	Ring—Retaining	RC	1
16	40B629-9-026	Ring—"V"	RC	2
17	A8093	Nut—Packing	RC	1
18	A8115	Washer—Felt	RC	1
19	A8116	Link	RC	1
	B10029	Handle Assembly	RC	1
20	A8048	Grip—Handle	RC	1
21	B10030	Handle	RC	1
22	B10017	Socket—Handle	RC	1
23	NO NUMBER	Bearing	RC	2
24	AN23-32	Bolt—Clevis	RC	1
25	AN960-10L	Washer—Plain	RC	2
26	AN320-3	Nut—Aircraft shear	RC	1
27	A10039	Shaft	RC	1
28	AN960-516	Washer—Plain	RC	2
29	AN394-21	Pin—Flat head	RC	1
30	AN394-31	Pin—Flat head	RC	1
31	AN960-416	Washer—Plain	RC	2

PUBLISHED BY AVIALOGS.COM

FUSELAGE

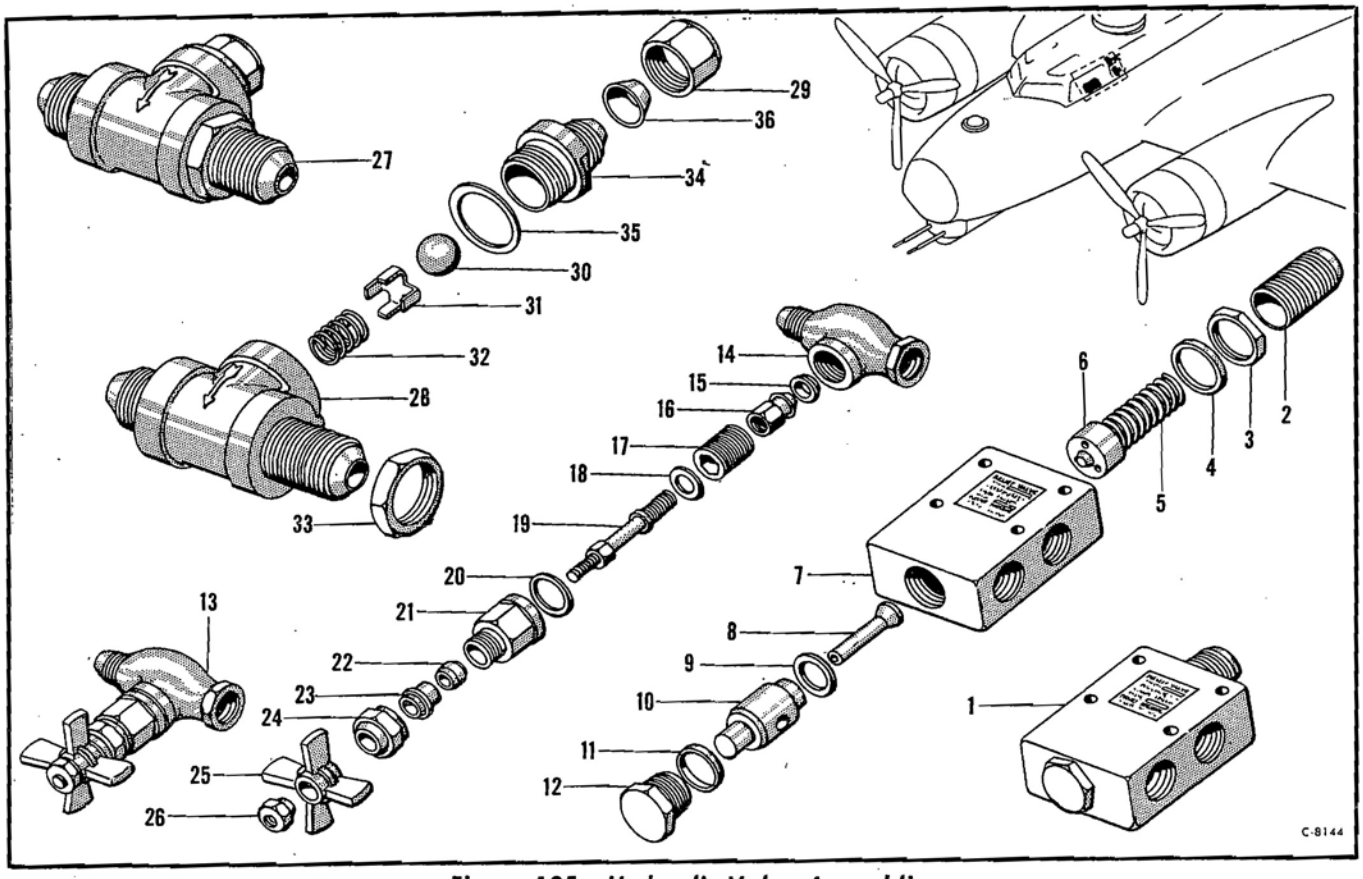

Figure 125—Hydraulic Valve Assemblies

Hydraulic Valve Assemblies

Figure & Index No.	Part Number	1 2 3 4 5 6 7 Nomenclature	Usage Code	Units Per Assy.
		Hydraulic Valve Assemblies		
125-1	7-500-8-1	Valve Assembly—Pressure relief (Kenyon) (see fig. 121)	All	Ref
2	7-308	Screw—Adjusting	All	1
3	7-310	Nut—Locking	All	1
4	7-315	Gasket	All	1
5	7-306-3	Spring	All	1
6	7-307	Guide—Spring	All	1
7	7-501	Body	All	1
8	7-302	Valve	All	1
9	7-304-1	Gasket	All	1
10	7-303	Seat	All	1
11	7-311	Ring—Sealing	All	1
12	7-305	Cap	All	1
13	251-2GT8D	Valve Assembly—Hydraulic (Parker) (see fig. 121)	All	Ref
14	10-1641-55D5	Body	All	1
15	6-1537-10SS3	Seat—Inserted	All	1
16	7-2937-17SS2	Slide	All	1
17	6-1537-12D1	Bushing—Slide	All	1
18	10-1336-26SS10	Washer—Stem	All	1
19	6-1537-13SS10	Stem	All	1
20	8-1142-13-42D12	Gasket	All	1
21	6-1537-9D1	Bonnet	All	1
22	8-1137-7-11P9	Packing	All	1
23	6-1537-14D1	Follower—Packing	All	1
24	6-1537-15D1	Cap—Packing	All	1
25	4-2243-1D31	Handle	All	1
26	1-2438-1-1D1	Nut—Jam	All	1
	6-1537-11S2	Washer—Jam	All	1
27	5291-1T8D	Valve Assembly—Suction test (Parker) (see fig. 121)	All	Ref
28	8-1340-25D3	Body	All	1
29	9-1642-7-82	Cap	All	1
30	5-1142-2	Ball	All	1
31	4-3041-98SS11	Guide—Ball	All	1
32	9-1642-8SS8	Spring	All	1
33	2-639-6-23D1	Nut—Locking	All	1
34	1-534-43D1	Cap	All	1
35	1-2639-3-8CUI	Gasket	All	1
36	8-1142-13-25CUI	Gasket	All	1

PUBLISHED BY AVIALOGS.COM

FUSELAGE

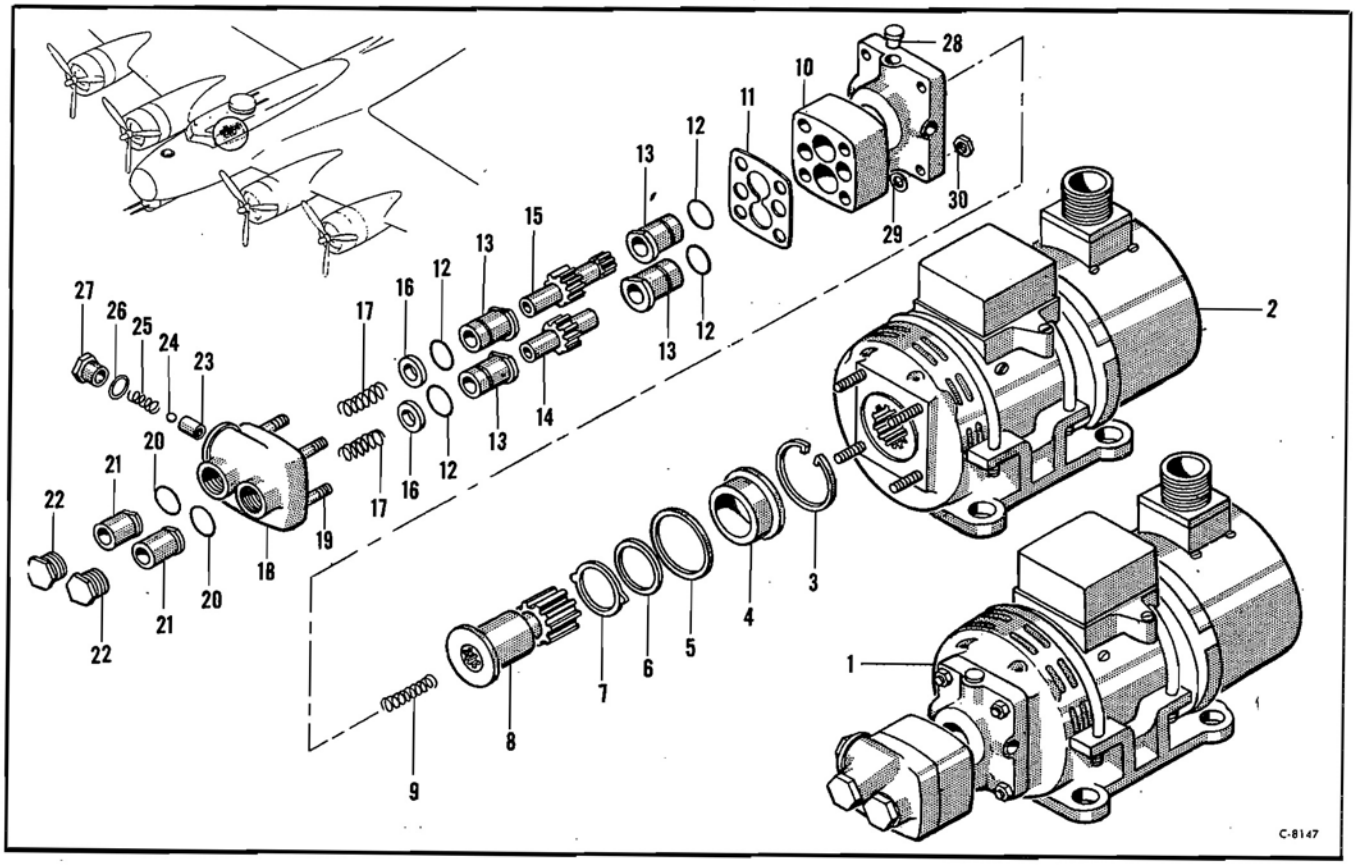

Figure 126—Motor Driven Gear Pump

Motor Driven Gear Pump

Figure & Index No.	*Part Number*	*1 2 3 4 5 6 7 Nomenclature*	*Usage Code*	*Units Per Assy.*
126-1	1E678	Pump—Motor driven gear (Pesco) (see fig. 121)	All	Ref.
2	678-1	Motor—Electric	All	1
	1P677	Pump Assembly—Gear	All	1
3	677-8	Ring—Snap	All	1
4	677-3	Retainer	All	1
5	AN6227-18	Packing—"O" ring hydraulic	All	1
6	AN6227-14	Packing—"O" ring hydraulic	All	1
7	677-4	Disc—Seal	All	1
8	677-5	Coupling Assembly	All	1
	677-6	Coupling	All	1
	677-7	Shaft—Drive	All	1
9	320-37	Spring	All	1
10	677-1	Body	All	1
11	677-9	Gasket	All	1
12	519-27	Ring—Bearing seal	All	4
13	655-4	Bearing	All	4
14	519-15	Gear—Driven	All	1
15	519-14A	Gear—Driven	All	1
16	655-6	Spacer	All	2
17	320-18	Spring	All	2
	655-5	Disc—Seal	All	1
18	677-2	Cover	All	1
19	203-12L	Stud	All	4
20	320-24	Gasket	All	2
21	320-22	Adapter	All	2
22	320-23	Nut	All	2
23	252-5	Seat	All	1
24	R400B21	Ball	All	1
25	252-7C	Spring	All	1
26	396-5	Gasket	All	1
27	349-20	Retainer	All	1
28	R400-71	Plug Assembly—Vent	All	1
	R400-72	Plug—Vent	All	1
	R400-41	Ring—Snap	All	1
	R400-42	Flange	All	1
	R400-43	Screen	All	1
29	181-22	Washer	All	4
30	203-15	Nut	All	4

PUBLISHED BY AVIALOGS.COM

FUSELAGE

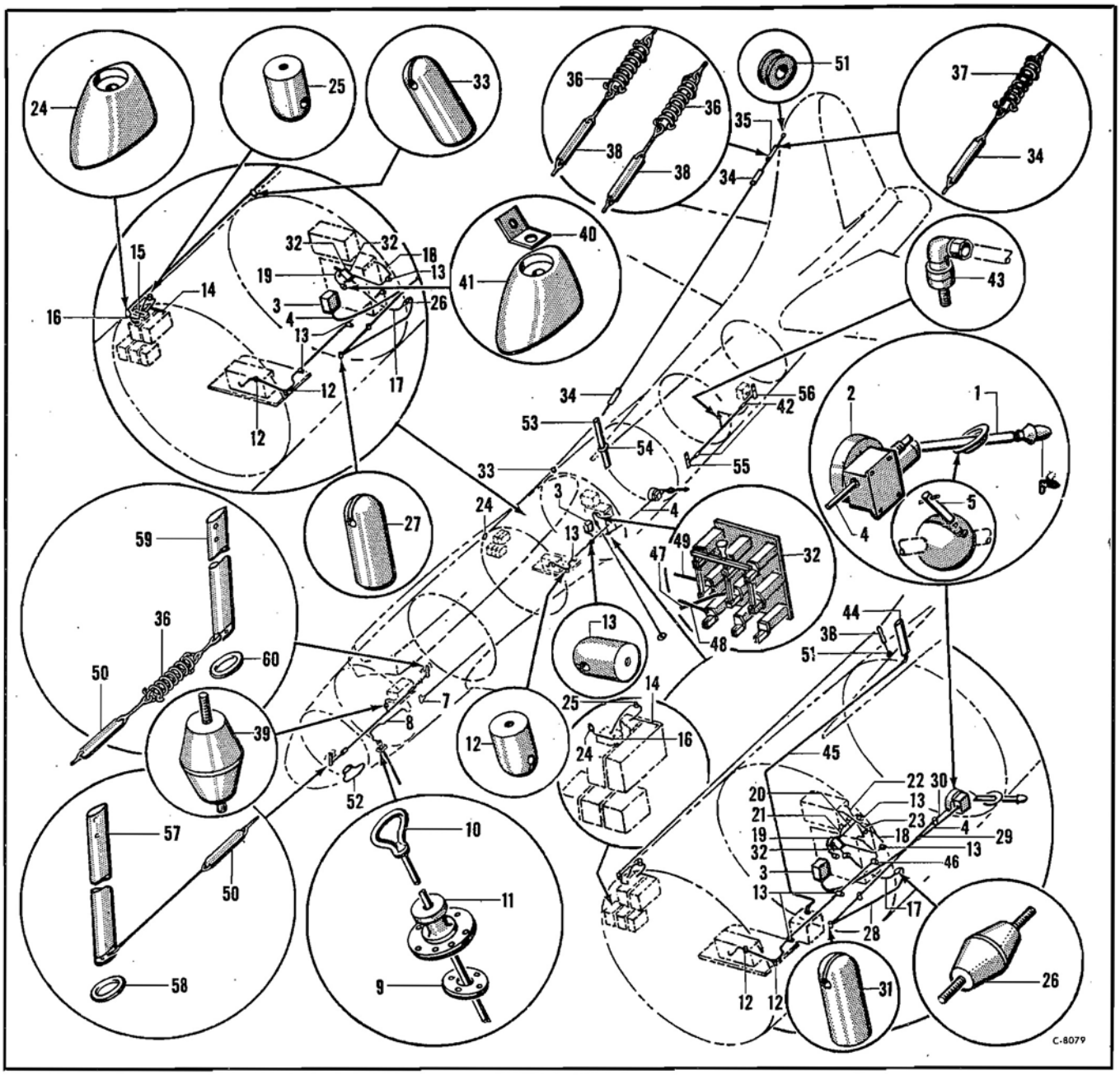

Figure 127—Radio Antenna

Radio Antenna

Figure & Index No.	*Part Number*	*1 2 3 4 5 6 7* *Nomenclature*	*Usage Code*	*Units Per Assy.*
		Radio Antenna		
	55-7789	Installation—Radio equipment	All	NP
	15-8529	Installation—Trailing antenna	All	NP
127-1	15-8529-1	Fairlead Assembly—Antenna	OA	1
	15-8529-11	Fairlead Assembly—Antenna	LK	1
	3-15106	Fairlead Assembly—Station 6D	OA	1
	3-15105	Clamp Assembly—Antenna fairlead	OA	1
	MC163	Connector—GFE	All	1
2	RL42A	Reel Assembly—GFE	All	1
3	MC461	Control Assembly—Antenna GFE	All	1
4	MC215-127	Shaft Assembly—Tuning GFE	LC	1
	MC215-105	Shaft Assembly—Tuning GFE	MP	1
5	3-21433	Screw Assembly	LC	1
6	6-9987-8	Weight Assembly—Antenna GFE	All	1
	6-9987-2	Spring—GFE	All	1
	6-9987-3	Seat—Spring GFE	All	1

RESTRICTED
PUBLISHED BY AVIALOGS.COM

FUSELAGE

Radio Antenna

Figure & Index No.	Part Number	1 2 3 4 5 6 7 Nomenclature	Usage Code	Units Per Assy.
	6-9987-4	Screw—End GFE	All	1
	55-7774	Installation—Radio antenna	All	NP
	6-10789	Installation—Spare whip antenna	I	NP
127-7	L20678-502	Whip and Handle Assembly (Aircraft Accessories)	I	1
	9-6606	Installation—Whip antenna tube	JB	NP
8	9-6606-2	Lead-in Assembly	JB	1
	9-3713	Installation—Radio compass antenna	All	NP
	3-14988-2	Installation—Whip antenna seal	All	NP
9	1-30175	Seal—Whip antenna	All	1
10	L20678-502	Whip and Handle Assembly (Aircraft Accessories)	All	1
11	L20699-502	Housing and Disc Assembly (Aircraft Accessories)	All	1
	3-18541	Installation—Liaison antenna insulator	All	NP
12	35A2276	Insulator (Type IN81) GFE	All	2
	1-17633	Installation—Receiver lead-in insulator	All	NP
	1-17633-1	Installation—Receiver lead-in insulator	LC	NP
	1-17633-3	Installation—Receiver lead-in insulator	All	NP
	1-17633-4	Installation—Receiver lead-in insulator	JC	NP
	1-17633-5	Installation—Receiver lead-in insulator	All	NP
13	35A2276	Insulator (Type IN81) GFE	All	1
14	9-6452-4	Lead Assembly—Antenna	All	1
15	9-6452-19	Lead Assembly—Antenna	Y	1
16	9-6452-13	Lead Assembly—Antenna	All	1
17	9-6452	Lead Assembly—Antenna	TB	1
	9-6452-41	Lead Assembly—Antenna	EN	1
18	9-6452-9	Lead Assembly—Antenna	TB	1
	9-6452-21	Lead Assembly—Antenna	CN	1
19	9-6452-16	Lead Assembly—Antenna	All	1
20	9-6452-26	Lead Assembly—Antenna	CN	1
21	9-6452-30	Lead Assembly—Antenna	CN	1
22	9-6452-33	Lead Assembly—Antenna	EN	1
23	9-6452-37	Lead Assembly—Antenna	EN	1
	3-13944	Installation—Command lead-in insulator	All	NP
24	1-18465	Insulator	All	2
	1-23553	Installation—Command transmitter insulator	All	NP
25	35A2276	Insulator (Type IN81) GFE	All	1
	3-15165	Installation—Bulkhead station 6 insulator	All	NP
26	35A2282	Insulator (Type IN84) GFE	All	1
	6-10781	Installation—Trailing antenna insulator	OA	NP
27	35A2277	Insulator (Type IN82) GFE	OA	4
	15-13217	Installation—Trailing antenna lead-in	LK	NP
28	15-13214-9	Lead-in Assembly	LK	1
	35A2277	Insulator (Type IN82) GFE	LK	1
29	15-13217-10	Lead-in Assembly	LK	1
30	15-13217-11	Lead-in Assembly	LK	1
	35A2277	Insulator (Type IN82) GFE	LK	1
31	35A2277	Insulator (Type IN82) GFE	LK	4
	6-10105	Installation—Antenna switch	All	NP
32	962	Switch Assembly (Square D Co.)	TB	1
	SW223	Switch Assembly—GFE	CN	1
	SW225	Switch Assembly—GFE	XO	1
	3-21910	Installation—Antenna insulator	TB	NP
33	35A2277	Insulator (Type IN82) GFE	TB	1
34	IN88	Insulator—GFE	All	2
35	15-7774-2	Link	HA	2
36	3-26086	Spring Assembly—Aircraft antenna	JI	3
	55-7774-420	Antenna Assembly	EN	1
37	3-26086	Spring Assembly—Aircraft antenna	EN	1
38	SCA419	Insulator (Type IN88) GFE	EN	2
	1-12946-1	Bushing—Tab cable	EN	3
	6-18225	Installation—Compass antenna insulator	XL	NP
39	IN79	Insulator—GFE	XL	1
	3-13564	Installation—Liaison antenna lead-in insulator	All	NP
40	3-13564-2	Link Assembly	AA	1
41	1-18465	Insulator	KB	2
	9-3765	Installation—Marker beacon antenna	All	NP
	9-3765-1	Wire Assembly	All	1
42	IN88	Insulator—GFE	All	2
43	9-3765-16	Cable Assembly—Transmitter	OA	1
	9-3765-23	Cable Assembly—Transmitter	LK	1
	9-9160	Installation—Radio antenna mast	EN	NP
44	NO NUMBER	Mast—Antenna (Spec. AN104A) GFE	EN	1
	6-19357	Clamp Assembly—Antenna mast	EN	2
45	55-7774-423	Cable Assembly	EN	1
	1-17633-6	Installation—Receiver lead-in insulator	EN	NP
46	35A2276	Insulator (Type IN81) GFE	EN	1
47	9-10618	Lead Assembly—Antenna	XO	1
48	9-10618-5	Lead Assembly—Antenna	XO	1
49	9-10618-8	Lead Assembly—Antenna	XO	1
50	SCA419	Insulator (Type IN88) GFE	All	2
51	1-12946-1	Bushing—Tab cable	All	2
	6-9705	Installation—Radio compass loop	All	NP
52	LP21AM	Loop (LP21A optional) GFE	All	1
	6-22200	Mounting—Loop	All	1
	9-5053	Installation—Radio antenna mast (see fig. 79)	All	NP
53	9-5053-1	Mast Assembly	All	1
54	1-25503	Grommet—Antenna mast	All	1
	6-10137	Installation—Marker antenna mast (see fig. 79)	All	NP
55	6-10137-1	Mast Assembly	All	1
	9-3660	Installation—Marker antenna mast (see fig. 79)	All	NP
56	9-3660-1	Mast Assembly	All	1
	9-7955	Installation—Compass antenna mast (see fig. 71)	XL	NP
57	3-27987	Mast Assembly—Compass antenna	XL	1
58	1-25503	Grommet—Compass antenna	XL	1
	6-7956	Installation—Compass antenna mast (see fig. 71)	XL	NP
59	3-27987	Mast Assembly—Compass antenna	XL	1
60	1-25503	Grommet—Compass antenna	XL	1

PUBLISHED BY AVIALOGS.COM

FUSELAGE

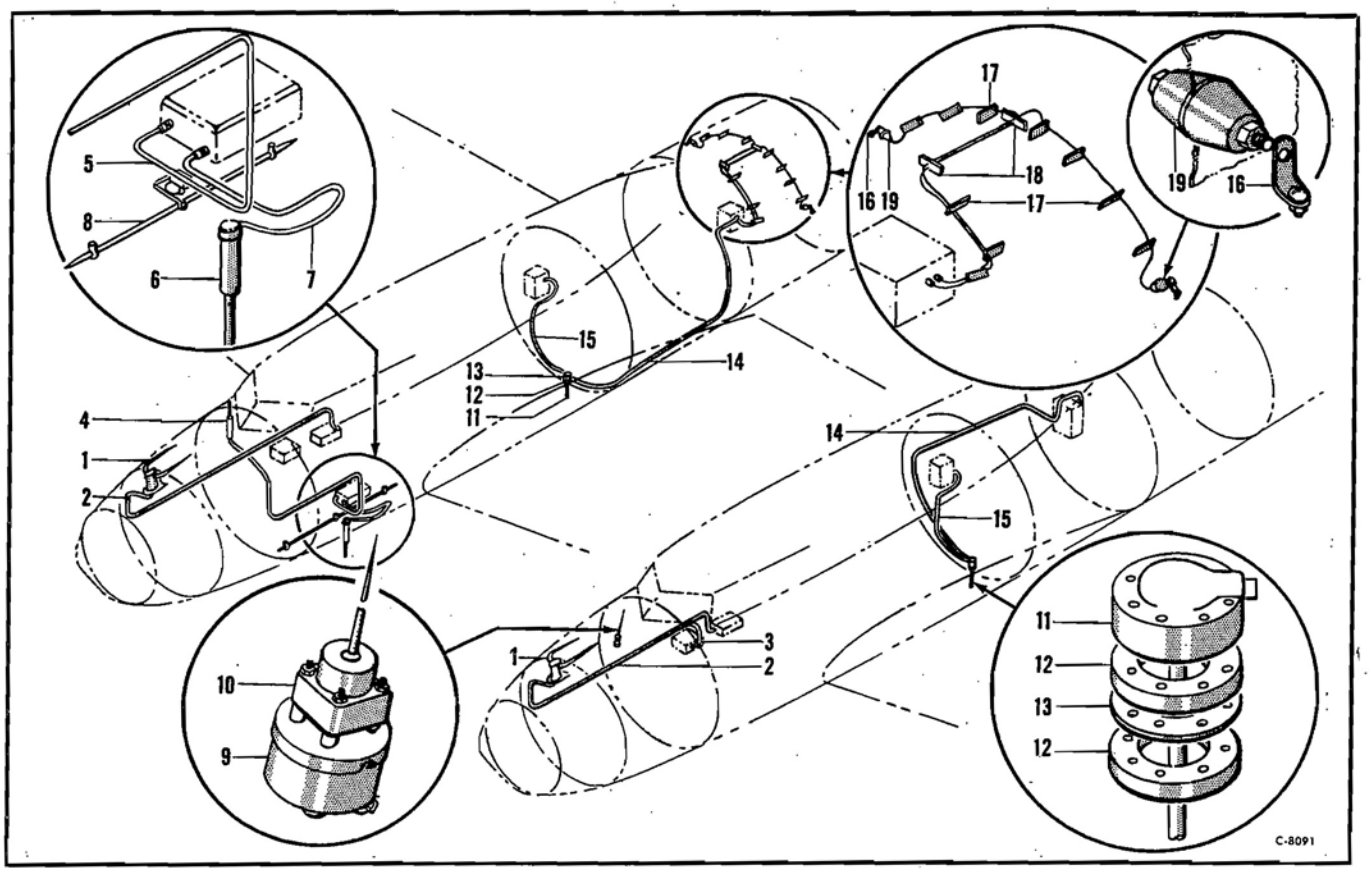

Figure 128—Radio Antenna (Special)

Radio-Antenna (Special)

Figure & Index No.	Part Number	1 2 3 4 5 6 7 Nomenclature	Usage Code	Units Per Assy.
		Radio Antenna (Special)		
	15-8769	Installation—Radio equipment (special)	All	NP
	9-7508	Installation—RC103 antenna mast	All	NP
128-1	NO NUMBER	Mast—Antenna (RC103) (Spec. AN100) (installed by Government)	TB	1
	AS27ARN5	Mast—Antenna (installed by Government)	EN	1
2	15-8769-11	Cable Assembly	DK	1
3	15-8769-13	Cable Assembly	EN	1
	9-4608	Installation—Receiver antenna mast	XA	NP
4	NO NUMBER	Mast Assembly—Antenna SCR515A radio (Spec. AN40A) (GFE for check instal only)	XA	1
	1-28799	Filler—Navigators case support	XA	1
5	3-15159-5	Cable Assembly—Antenna SCR515A	XA	1
	15-8793	Installation—Transmitter antenna mast	XA	NP
6	NO NUMBER	Mast Assembly—Antenna SCR515A radio (Spec. AN40A) (GFE for check instal only)	XA	1
	1-25596	Support—Antenna mast	XA	1
7	3-15159-6	Cable Assembly—Antenna SCR515A	XA	1
	15-9474	Installation—Lorenz blind landing Di-pole	XA	NP
8	15-9474-4	Aerial—(Type 1) (installed by Government)	XA	1
	1-23503-152	Spacer—1-4 bolt (installed by Government)	XA	1
	6-20796	Installation—Navigators radio antenna	RP	NP
9	MC432A	Unit—Loading GFE	RP	1
10	NO NUMBER	Antenna (Spec. AN109A)	RP	1
	9-4902	Installation—Identification radio mast	All	NP
11	R3090	Mast Assembly—Antenna (GFE for check installation only)	E	1
	NO NUMBER	Mast—Antenna (Spec. AN95A) GFE	ZE	1
12	1-23550	Mounting—Antenna mast	E	2
	1-29992	Spacer—Antenna mast	RE	2
13	1-23548	Gasket—Antenna mast	All	1
14	15-8769-7	Cable Assembly	AF	1
15	15-8769-8	Cable Assembly	YI	1
	15-9760	Installation—SCR535A radio antenna	E	NP
16	15-9760-16	Clip Assembly	E	2
	1-16064	Bushing—Antenna connection	E	2
17	3-21406	Insulator—Radio antenna	E	10
18	3-21406-1	Insulator—Radio antenna	E	2
	PL176	Plug Assembly SCR535A radio	E	2
	6-10756	Installation—SCR535A radio insulator (LH)	E	NP
	6-10756-1	Installation—SCR535A radio insulator (RH)	E	NP
19	IN79	Insulator GFE	E	1
	1-26402	Washer	E	1

PUBLISHED BY AVIALOGS.COM

FUSELAGE

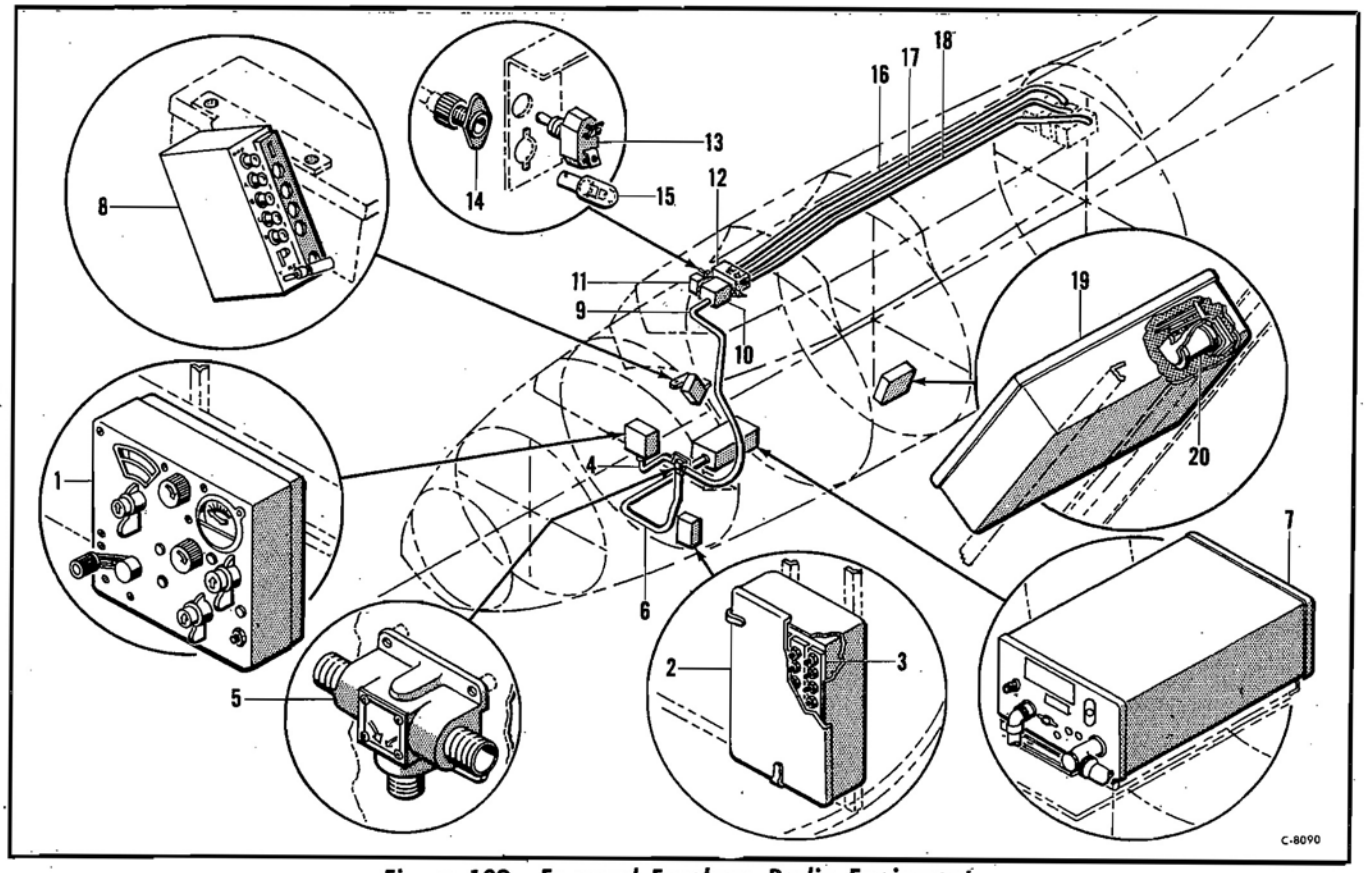

Figure 129—Forward Fuselage Radio Equipment

Forward Fuselage Radio Equipment

Figure & Index No.	Part Number	1 2 3 4 5 6 7 Nomenclature	Usage Code	* Units Per Assy.
		Forward Fuselage Radio Equipment		
	55-7789	Installation—Radio equipment	All	NP
	46-8833	Installation—Radio compass control	All	NP
129-1	BC434A	Compass—Radio control box GFE	TB	1
	C4ARN7	Box—Control radio compass GFE	EN	1
	9-6483	Installation—Radio compass shield	All	NP
2	43-12785	Shield Assembly—Radio compass relay	All	1
3	BK22	Relay—GFE	All	1
4	MC124-30	Shaft—Tuning GFE	All	1
	3-12787-3	Installation—Radio compass coupling	All	NP
5	MC203	Coupling—GFE	All	1
6	MC124-112	Shaft—Tuning GFE	All	1
	9-6459	Installation—Radio compass receiver	All	NP
7	BC433	Unit—Radio compass GFE	TB	1
	R5ARN7	Unit—Radio compass GFE	EN	1
	FT213	Mount—GFE	All	1
	6-19366	Installation—Radio control box	All	NP
8	6-19366-1	Box Assembly	All	1
	BC602B	Box—Radio control GFE	All	1
9	MC124-97	Shaft—Tuning GFE	All	1
	6-11564	Installation—Radio and compass control	All	NP
10	BC434	Box—Radio and compass control GFE	TB	1
	C4ARN7	Box—Radio and compass control GFE	EN	1
11	BC451A	Box—Transmitter control GFE	All	1
	FT228	Mounting—GFE	All	1
12	BC450A	Box—Receiver control GFE	All	1
	FT222A	Mounting—GFE	All	1
13	AN3021-6	Switch—Single pole toggle	ZE	1
14	AN3034-1	Light Assembly—Direct instrument	ZE	2
15	AN3121-313	Lamp—T3 1-4 single contact	ZE	2
16	MC215-214	Shaft—Tuning GFE	All	1
17	MC215-221	Shaft—Tuning GFE	All	1
18	MC215-228	Shaft—Tuning GFE	All	1
	9-3646	Installation—Forward radio junction shield	All	NP
19	6-9354	Shield Assembly—Forward radio junction	TB	1
	9-3646-6	Shield Assembly—Electrical junction	EN	1
	6-7625	Shield Assembly—Electrical junction	EN	1
20	SC-C324D	Relay—Microphone (Type ZQA)	TA	2

PUBLISHED BY AVIALOGS.COM

FUSELAGE

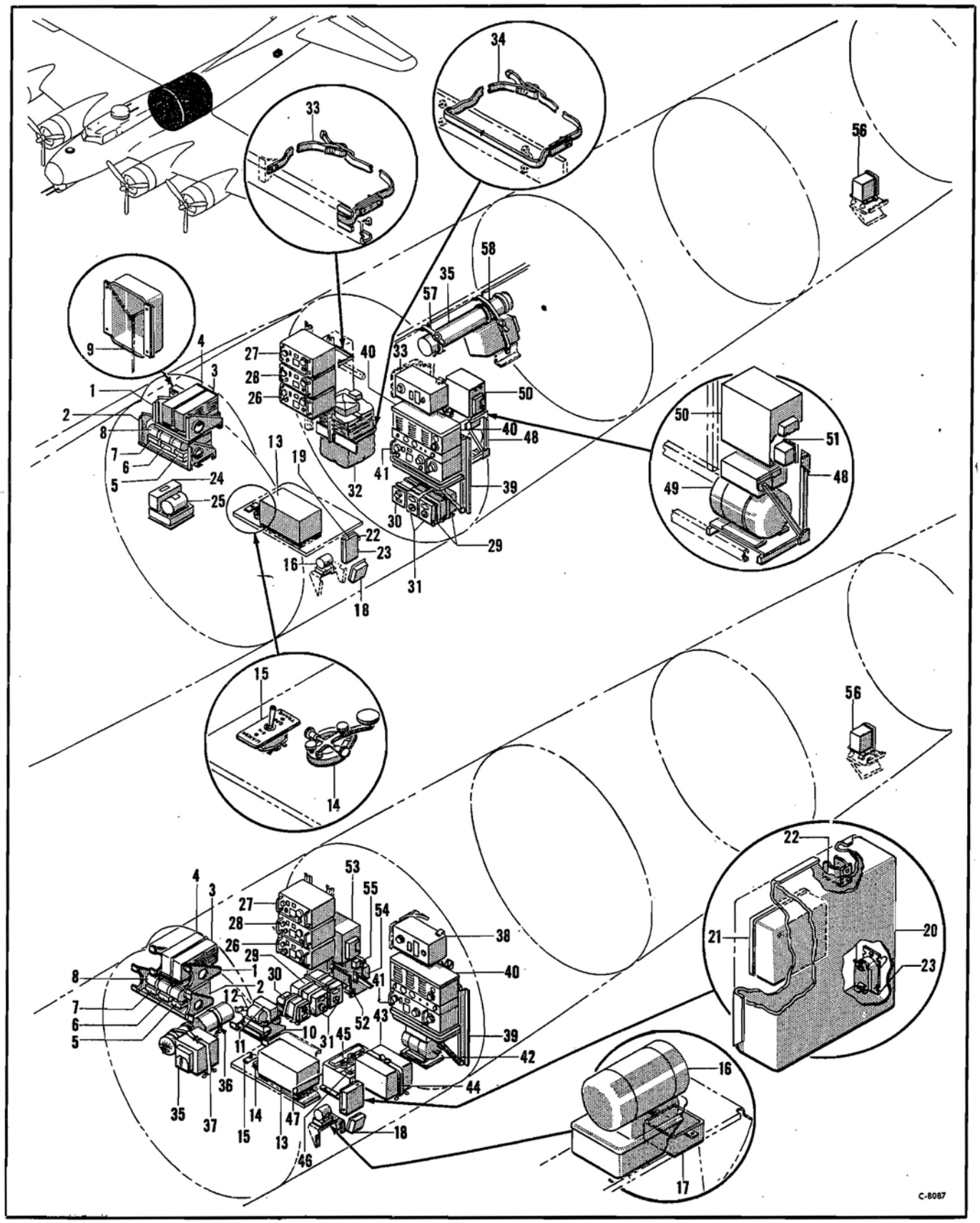

Figure 130— Aft Radio Equipment

PUBLISHED BY AVIALOGS.COM

FUSELAGE

Aft Radio Equipment

Figure & Index No.	Part Number	1 2 3 4 5 6 7 Nomenclature	Usage Code	Units Per Assy.
		Aft Radio Equipment		
	55-7789	Installation—Radio equipment	All	NP
130-1	15-7786	Support Assembly—Command transmitter	All	1
2	15-7785	Support Assembly—Command receiver	All	1
3	BC458A	Transmitter—Radio command GFE	All	1
4	BC459A	Transmitter—Radio command GFE	Y	1
5	BC453A	Receiver—Radio command GFE	All	1
6	BC454A	Receiver—Radio command GFE	All	1
7	BC455A	Receiver—Radio command GFE	All	1
8	DM32A	Dynamotor—Radio command GFE	All	3
9	BC442A	Relay Assembly—Command radio GFE	EN	1
	9-9186	Installation—Command radio dynamotor and modulator	EN	NP
10	15-16174	Support Assembly—Command modulator and dynamotor	EN	1
11	BC456E	Modulator—Command GFE	EN	1
12	DM33A	Dynamotor—Command GFE	EN	1
	6-8826	Installation—Liaison receiver	All	NP
13	BC348	Receiver—GFE	All	1
	41-7511	Installation—Liaison key	All	NP
14	J37	Key Assembly—GFE	All	1
	3-20689	Installation—Liaison transmitter switch	All	NP
15	AN3022-2B	Switch—Single pole toggle	All	1
	6-9708	Installation—Interphone dynamotor	TC	NP
	6-9708-7	Bracket Assembly	TC	1
16	PE86	Dynamotor—GFE	TC	1
17	CA275X	Capacitor (P. R. Mallory)	TC	1
	6-7582	Installation—Interphone amplifier	TC	NP
	9-10631	Installation—Interphone amplifier	WP	NP
18	BC347	Amplifier—Interphone GFE	TC	1
	AM26A1C	Amplifier—Interphone GFE	WP	1
	56-7583	Installation—Liaison junction shield	All	NP
	56-7583-500	Shield Assembly	TB	1
	56-7583-503	Shield Assembly	EN	1
19	6-7625	Shield Assembly—Electrical junction	TB	1
20	6-9354-10	Shield Assembly—Forward radio junction	EN	1
21	M299	Adapter—Microphone GFE	EN	1
22	41-158	Retainer—Interphone jack	All	1
23	C1B	Switch	All	1
24	BC456A	Modulator—Command GFE	TB	1
25	DM33A	Dynamotor—Command GFE	TB	1
	6-7193	Installation—Transmitter tuning unit	All	NP
26	TU5B	Unit—Tuning GFE	All	1
27	TU6B	Unit—Tuning GFE	All	1
28	TU7B	Unit—Tuning GFE	All	1
	34D5889	Case (Type C5-48) GFE	All	3
	9-6116	Installation—SCR274N radio stowage	All	NP
29	9-6116-6	Strap Assembly	All	2
	1-21470	Loop—Footman	All	4
30	9-6116-1	Radio—Receiver GFE	All	1
31	9-6116-2	Radio—Transmitter GFE	All	2
32	55-7789-401	Radio—Emergency GFE	B	1
	6-13527	Installation—Emergency radio support	B	NP
33	3-19628	Strap Assembly—Emergency radio	B	1
34	3-19629	Belt Assembly—Emergency radio	B	1
	1-21470	Loop—Footman	B	2
	9-6790	Installation—SCR578 radio transmitter	BE	NP
35	SCR578	Radio—Emergency GFE	BE	1
36	6-16371-11	Strap Assembly—Emergency radio	KJ	1
37	6-16371-7	Strap Assembly—Emergency radio	KJ	1
	1-21470	Loop—Footman	KJ	3
	9-3750	Installation—Antenna tuning unit	All	NP
38	BC306	Unit—Antenna tuning GFE	All	1
	6-7189-19	Installation—Liaison transmitter	All	NP
	9-2715	Installation—Transmitter support	CB	NP
39	9-2715-1	Support Assembly	CB	1
40	36D5854	Transmitter—GFE	CB	1
41	TU26B	Unit—Tuning GFE	CB	1
	14-3671	Installation—Liaison dynamotor	KJ	NP
42	36B5856	Dynamotor—GFE	KJ	1
	9-10900	Installation—Frequency meter set stowage	GQ	NP
43	SCR211AA	Set—Frequency meter GFE	GQ	1
44	3-32568	Strap Assembly—Frequency meter stowage	GQ	1
	1-21470	Loop—Footman	GQ	2
	15-16187	Installation—SCR522 transmitter and receiver	EN	NP
	15-16187-1	Base Assembly	EN	1
	6-19423	Base—Transmitter and receiver support	EN	1
45	BC625	Transmitter—GFE	EN	1
46	BC624	Receiver—GFE	EN	1
47	C880	Case—GFE	EN	1
	15-10622	Installation—SCR535 radio receiver and dynamotor	OA	NP
	15-10621	Installation—SCR535 receiver and dynamotor support	OA	NP
48	15-10621-1	Support Assembly	OA	1
49	PE73B	Dynamotor Assembly—GFE	OA	1
50	BC966A	Receiver Assembly—GFE	OA	1
51	BC767	Indicator Assembly—GFE	OA	1
	15-16176	Installation—Radio receiver and dynamotor	EN	NP
52	15-16167	Support Assembly—Receiver and dynamotor	EN	1
53	BC966A	Receiver—GFE	EN	1
54	PE94C	Dynamotor—GFE	EN	1
55	BC767	Indicator—GFE	EN	1
	9-3612	Installation—Marker beacon receiver	All	NP
56	BC357	Receiver—GFE	RD	1
	BC1033	Receiver—GFE	GH	1
	8-2780	Installation—SCR578 radio support	WD	NP
57	3-19628-6	Strap Assembly—Emergency radio	WD	1
58	3-19628-11	Strap Assembly—Emergency radio	WD	1
	1-21470	Loop—Footman	WD	3

PUBLISHED BY AVIALOGS.COM

FUSELAGE

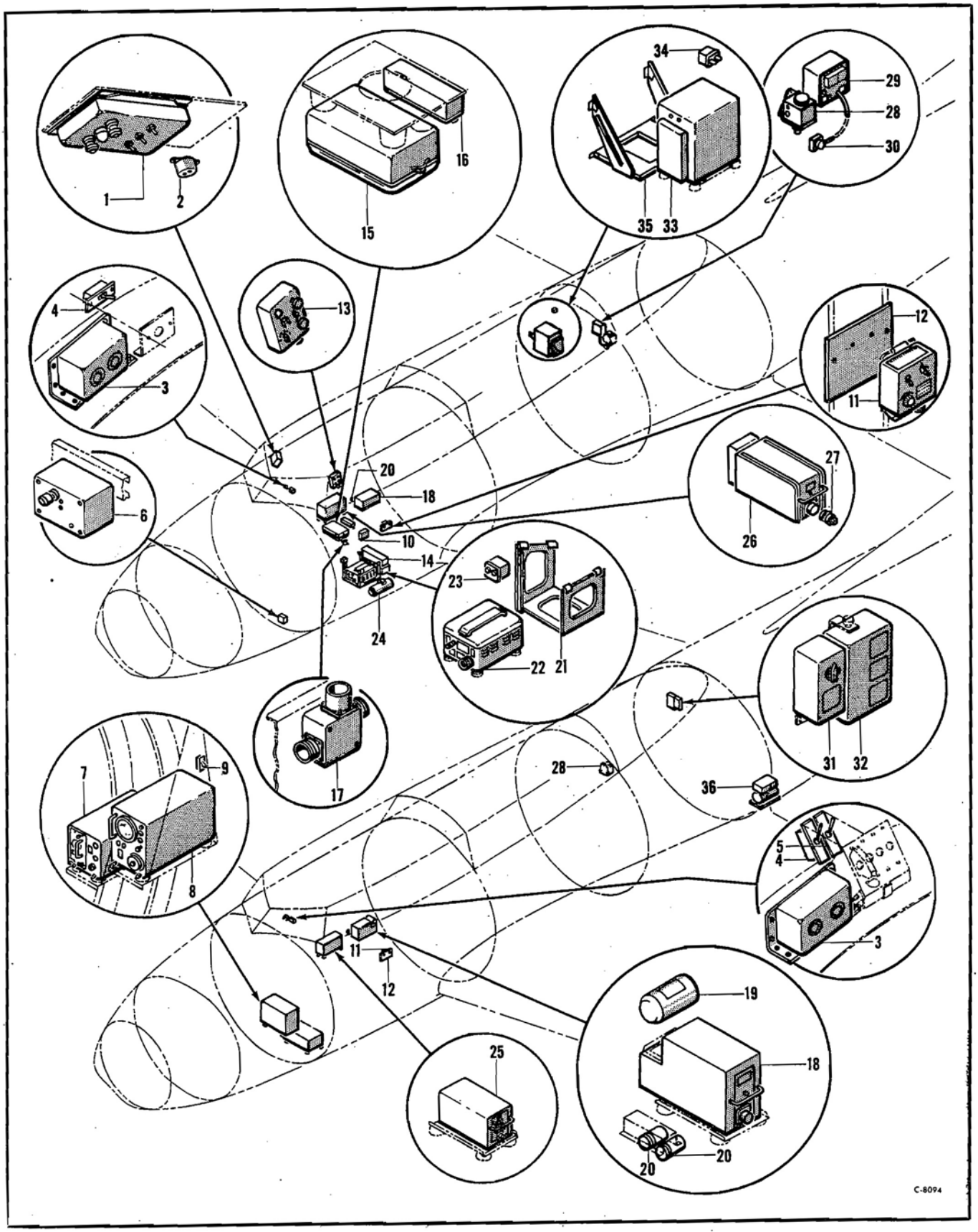

Figure 131—Special Radio Equipment

PUBLISHED BY AVIALOGS.COM

FUSELAGE

Special Radio Equipment

Figure & Index No.	Part Number	1 2 3 4 5 6 7 Nomenclature	Usage Code	Units Per Assy.
		Special Radio Equipment		
	15-8769	Installation—Radio equipment (special)	All	NP
	9-4607	Installation—SCR515A radio control and switch	XA	NP
131-1	BC646A	Control Assembly GFE	XA	1
	FT256A	Plate—Mounting GFE	XA	1
2	SW181	Switch Assembly GFE	XA	1
	9-5058	Installation—SCR535A radio detonator switch	WC	NP
3	9-5058-7	Switch Assembly	WC	1
	BC765	Switch GFE	WC	1
	9-5058-8	Support Assembly	E	1
4	AN3022-2B	Switch—Single pole toggle	E	1
	9-5058-13	Support Assembly	ZE	1
5	AN3022-2B	Switch—Single pole toggle	ZE	2
	49-1356-2	Guard (Cutler-Hammer)	ZE	1
	9-5607	Installation—Lorenz blind landing relay	XA	NP
6	BC927	Switch—Relay antenna GFE	XA	1
	15-7774	Installation—Navigators radio receiver and indicator	WP	NP
7	R1335	Receiver GFE	WP	1
	FT447	Mounting—Receiver GFE	WP	1
8	62	Indicator GFE	WP	1
	FT446	Mounting—Indicator GFE	WP	1
9	AN3022-2B	Switch—Single pole toggle	WP	1
	6-13135	Installation—Lorenz blind landing junction box	TA	NP
10	6-13135-1	Box—Junction (Type no. 9) GFE	TA	1
	6-14152	Installation—Blind landing control	DK	NP
11	BC732A	Box—Radio control GFE	DK	1
	6-14152-3	Mount Assembly	WJ	1
	6-14152-4	Mount Assembly	PK	1
12	FT292	Mounting GFE	DK	1
	9-5062	Installation—Lorenz blind landing control	XA	NP
13	9-5062-1	Control Assembly GFE	XA	1
	6-11962	Installation—Lorenz blind landing power unit	XA	NP
14	6-11962-1	Unit—Power GFE	XA	1
	9-5041	Installation—Lorenz blind landing receiver (R1125A) GFE	XA	NP
15	R1125A	Receiver Assembly GFE	XA	1
16	9-5041-2	Box Assembly—Junction (Type 7) GFE	XA	1
	3-19251	Installation—Tee blind landing junction	XA	NP
17	3-19251-1	Box—Junction (Type no. 8) GFE	XA	1
	6-13108	Installation—Blind landing receiver	All	NP
18	6-13108-1	Receiver GFE	TB	1
	AN8008-27	Insulator—Vibration	TB	1
	BC733	Receiver GFE	EN	1
	FT283	Mounting GFE	EN	1
19	DM53	Dynamotor GFE	DK	1
	3-20639	Installation—Blind landing panel	DK	NP
20	30KB1250	Capacitor GFE	EN	2
	9-3776	Installation—SCR515A radio receiver and transmitter	XA	NP
	15-7366	Installation—Receiver and transmitter bracket	XA	NP
21	15-7366-13	Bracket Assembly	XA	1
22	BC645A	Receiver and Transmitter Assembly GFE	XA	1
	FT255A	Mount Assembly GFE	XA	1
23	BC727	Indicator (BC767 optional) GFE	XA	1
	9-4603	Installation—SCR515A radio dynamotor and coder	XA	NP
24	PE101A	Dynamotor and Coder (Type PE101A) GFE	XA	1
	FT251A	Plate—Mounting (Type FT251A) GFE	XA	1
	9-9196	Installation—Radio-glide path receiver	DN	NP
	9-10607	Installation—Radio-glide path receiver	WP	NP
25	R47ARN5	Receiver (R57ARN5 optional) GFE	EN	1
	MT28ARN5	Mounting GFE	EN	1
26	R89ARN5A	Receiver GFE	WP	1
27	U19ARN	Adapter GFE	WP	1
	9-4616	Installation—SCR535A radio switch	All	NP
28	BC706A	Switch Assembly GFE	HB	1
	SA3A	Switch Assembly GFE	QL	1
	9-4611	Installation—IFF radio control	All	NP
29	BC648A	Control Assembly GFE	E	1
	FT248A	Mount Assembly GFE	All	1
30	SO158A	Socket GFE	TB	1
	9-4647-2	Plug Assembly	E	1
31	BC965A	Box—Control GFE	ZE	1
32	BC958A	Box—Control GFE	ZE	1
	FT345A	Mounting—Adapter GFE	ZE	1
	15-8796	Installation—IFF radio receiver	YI	NP
33	BC966A	Receiver GFE	YI	1
	FT247	Mount Assembly GFE	YI	1
34	BC727	Indicator (BC767 optional) GFE	YI	1
	15-13245	Installation—IFF receiver support	YI	1
35	15-13245-1	Support Assembly	YI	1
	9-9232	Installation—Navigators radio inverter	WP	NP
36	PE206	Inverter GFE	WP	1
	FT107	Mounting GFE	WP	1

PUBLISHED BY AVIALOGS.COM

FUSELAGE

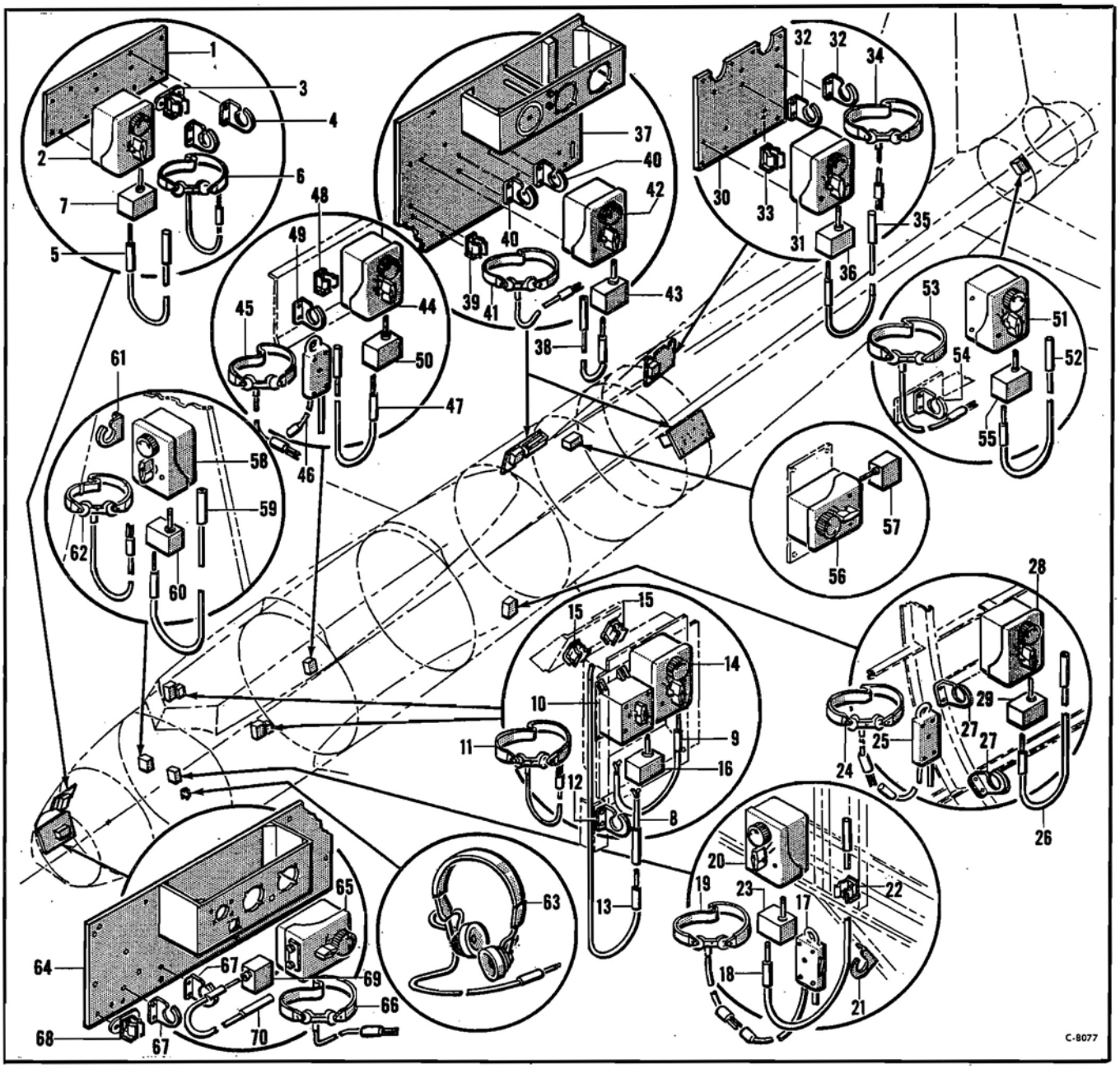

Figure 132—Radio Interphone

Radio Interphone

Figure & Index No.	Part Number	1 2 3 4 5 6 7 Nomenclature	Usage Code	Units Per Assy.
		Radio Interphone		
	55-7789	Installation—Radio equipment	All	NP
	8-2567	Installation—Bombardier interphone	AB	NP
	8-2567-1	Panel Assembly	AB	1
132-1	8-2567-3	Panel	AB	1
2	BC366	Box Assembly—Jack GFE	AB	1
3	41-7592	Retainer Assembly—Headset jack	AB	1
4	41-1150	Hanger—Headset cords	AB	2
5	1-20535-60	Cord Assembly—Head phone extension	AB	1
6	T30	Microphone Assembly GFE	AB	1
7	MC385	Adapter GFE	XD	1
	64-1741-506	Installation—Pilots interphone	All	NP
	59-2916-505	Installation—Co-pilots interphone	All	NP
	65-1741-509	Filter Assembly (used on 64-1741-506 only)	TB	1
	59-2916-507	Filter Assembly (used on 59-2916-505 only)	TB	1
	64-1741-514	Filter Assembly (used on 64-1741-506 only)	EN	1

RESTRICTED
PUBLISHED BY AVIALOGS.COM

FUSELAGE

Radio Interphone

Figure & Index No.	Part Number	1 2 3 4 5 6 7 Nomenclature	Usage Code	Units Per Assy.
	59-2916-512	Filter Assembly (used on 59-2916-505 only)	EN	1
132-8	1-20538-8	Cord Assembly—Turret headset	All	1
9	1-20537-16	Cord Assembly—Turret headset	EN	1
10	FL8	Filter GFE	All	1
11	T30	Microphone Assembly GFE	All	1
12	41-1150	Hanger—Headset cords	All	1
13	1-20535-54	Cord Assembly—Headphone extension	All	1
14	BC366	Box Assembly—Jack GFE	TB	1
	BC1366	Box Assembly—Jack GFE	EN	1
15	41-158-1	Retainer—Interphone jack	All	2
16	MC385	Adapter GFE	All	1
	49-3362	Installation—Navigators interphone	TC	NP
17	CD508	Cord Assembly GFE	LC	1
18	1-20535-60	Cord Assembly—Headphone extension	TC	1
19	T30	Microphone Assembly GFE	TC	1
20	BC366	Box Assembly—Jack GFE	TB	1
	BC1366	Box Assembly—Jack GFE	EN	1
21	41-1150	Hanger—Headset cord	TC	1
22	41-158	Retainer—Interphone jack	TC	1
23	MC385	Adapter GFE	XD	1
	59-2875	Installation—Radio operators interphone	All	NP
24	T30	Microphone Assembly GFE	All	1
25	CD508	Cord Assembly GFE	All	1
26	1-20535-60	Cord Assembly—Headphone extension	TA	1
	1-20535-84	Cord Assembly—Headphone extension	DK	1
27	41-1150	Hanger—Headset cord	All	2
28	BC366	Box Assembly—Jack GFE	TB	1
	BC1366	Box Assembly—Jack GFE	EN	1
29	MC385	Adapter GFE	All	1
	15-10404	Installation—Side gunner interphone	OA	NP
	15-10404-1	Panel Assembly	OA	1
30	6-13150	Panel	OA	1
31	15-10404-4	Box Assembly—Jack	OA	1
	BC366	Box Assembly—Jack GFE	OA	1
32	41-1150	Hanger—Headset cord	OA	2
33	41-158	Retainer—Interphone jack	OA	1
34	T30	Microphone Assembly GFE	OA	2
35	1-20535-60	Cord Assembly—Headphone extension	OA	2
36	MC385	Adapter GFE	XD	1
	15-13096	Installation—Waist gunners panel (LH)	KJ	NP
	15-13096-1	Installation—Waist gunners panel (RH)	KJ	NP
	15-13096-6	Panel Assembly	BJ	1
	15-13096-13	Panel Assembly	WN	1
	15-13096-14	Panel Assembly	WG	1
37	9-7367-6	Panel Assembly—Gunners	BJ	1
	9-7367-10	Panel Assembly—Gunners	XN	1
38	1-20535-100	Cord Assembly—Headphone extension	EJ	1
39	41-158	Retainer—Headset jack	All	1
40	41-1150	Hanger—Headset cord	All	2
41	T30	Microphone Assembly GFE	All	2
42	BC366	Box Assembly—Jack GFE	TB	1
	BC1366	Box Assembly—Jack GFE	EN	1
43	MC385	Adapter GFE	All	1
	46-9333	Installation—Gunners interphone	All	NP
44	BC366	Box Assembly—Jack GFE	TB	1
	BC1366	Box Assembly—Jack GFE	EN	1
45	T30	Microphone Assembly GFE	All	1
46	CD508	Cord Assembly GFE	All	1
47	1-20535-60	Cord Assembly—Headphone extension	All	1
48	41-158	Retainer—Interphone jack	CB	1
49	41-1150	Hanger—Headset cord	All	1
50	MC385	Adapter GFE	XD	1
	48-1293	Installation—Rear gunners interphone	All	NP
51	8-1293-9	Box Assembly—Jack	TB	1
	BC366	Box Assembly—Jack GFE	TB	1
	BC1366	Box Assembly—Jack GFE	EN	1
52	1-20535-42	Cord Assembly—Headphone extension	All	1
53	T30	Microphone Assembly GFE	All	1
54	41-1150-1	Hanger—Headset cord	All	1
55	MC385	Adapter GFE	XD	1
	9-5884	Installation—Lower turret interphone	All	NP
56	9-5884-1	Box Assembly—Jack	OA	1
	9-5884-7	Box Assembly—Jack	YI	1
	BC366	Box Assembly—Jack GFE	TB	1
	9-5884-10	Box Assembly—Jack	EN	1
	BC1366	Box Assembly—Jack GFE	EN	1
57	MC385	Adapter GFE	All	1
	9-9209	Installation—Navigators interphone	WP	NP
58	BC1366	Box Assembly—Jack GFE	WP	1
59	1-20535-60	Cord Assembly—Headphone extension	WP	1
60	MC385	Adapter GFE	WP	1
61	41-1150	Hanger—Headset cord	WP	1
62	T30	Microphone Assembly GFE	WP	1
63	HS33	Headsets GFE	All	9
	15-13876	Installation—Bombardier equipment panel	AL	NP
	15-13876-1	Panel Assembly	XK	1
	15-13876-10	Panel Assembly	AN	1
	15-13876-13	Panel Assembly	VN	1
	15-13876-12	Panel Assembly	MP	1
64	7-2114	Panel Assembly	YK	1
	7-2114-5	Panel Assembly	XN	1
65	BC366	Box Assembly—Jack GFE	XK	1
	BC1366	Box Assembly—Jack GFE	EN	1
66	T30	Microphone Assembly GFE	All	1
67	41-1150	Hanger—Headset cord	All	2
68	41-7592	Retainer—Headset jack	All	1
69	MC385	Adapter GFE	All	1
70	1-20535-60	Cord Assembly—Headphone extension	All	1

PUBLISHED BY AVIALOGS.COM

FUSELAGE

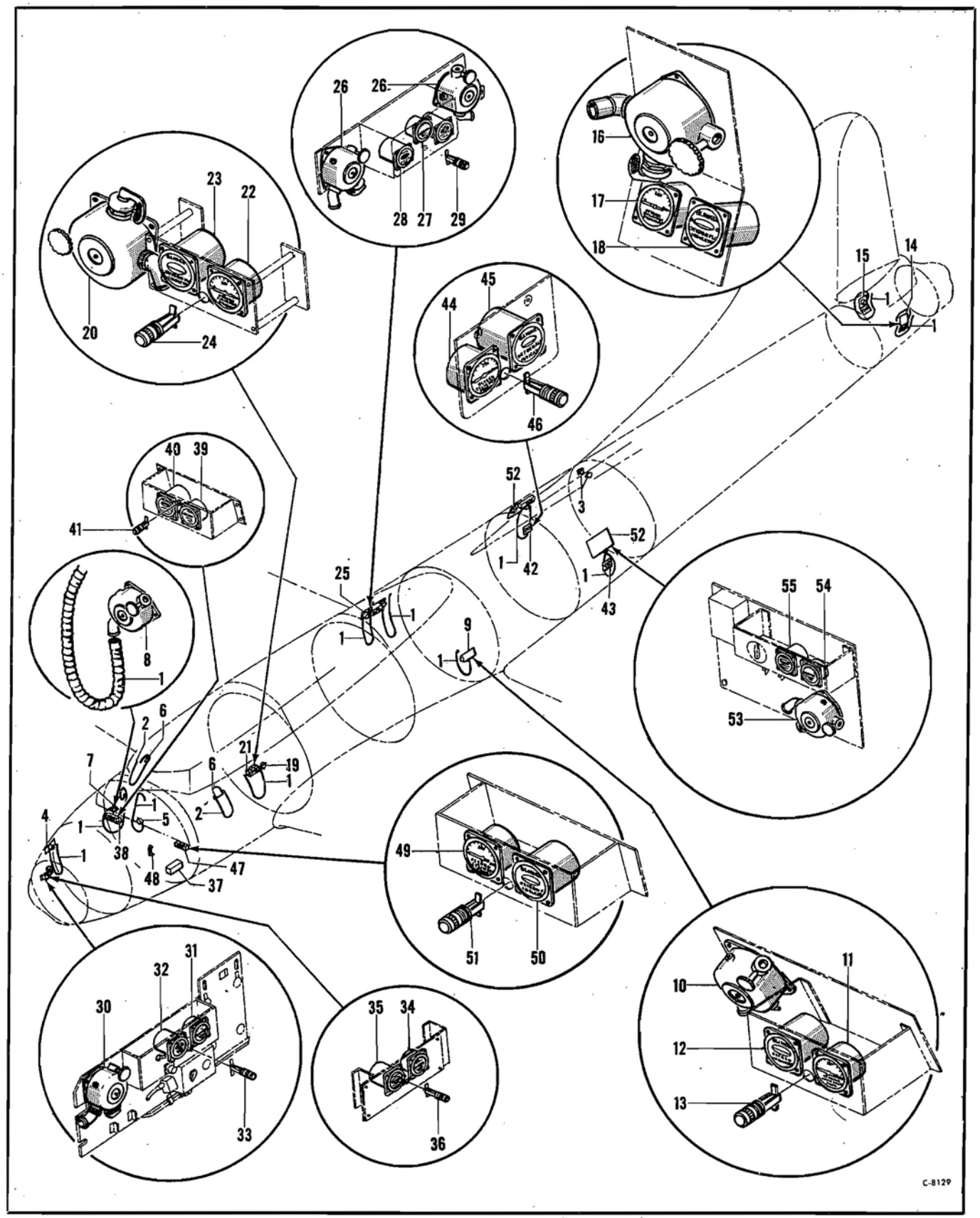

Figure 133—Oxygen System Control Panels

RESTRICTED
PUBLISHED BY AVIALOGS.COM

FUSELAGE

Oxygen System Control Panels

Figure & Index No.	Part Number	1 2 3 4 5 6 7 Nomenclature	Usage Code	Units Per Assy.
		Oxygen System Control Panels		
	55-7365	Installation—Oxygen tubing	All	NP
133-1	AN6003-6	Tube Assembly—Oxygen mask to regulator GFE	All	11
2	AN6003-4	Tube Assembly—Oxygen mask to regulator GFE	All	2
3	AN6004-1	Regulator—Diluter demand oxygen	OA	2
	6-13160	Installation—Oxygen regulator	AB	NP
	6-13699	Installation—Oxygen regulator	All	NP
	6-12867	Installation—Oxygen regulator	All	NP
	6-12867-1	Installation—Oxygen regulator	All	NP
	6-19371	Installation—Oxygen regulator	All	NP
4	6-13160-1	Panel Assembly—Oxygen regulator (used on 6-13160)	AB	1
5	6-13699-1	Regulator Assembly—Oxygen (used on 6-13699)	NO	1
	6-13699-3	Regulator Assembly—Oxygen (used on 6-13699)	PP	1
6	6-12867-7	Bracket Assembly—Oxygen regulator (used on 6-12867 and 6-12867-1)	All	1
7	6-19371-1	Regulator Assembly—Oxygen (used on 6-19371)	XL	1
8	AN6004-1	Regulator—Diluter demand oxygen GFE	All	1
	6-13101	Installation—Oxygen equipment bracket	All	NP
9	6-12633-3	Bracket Assembly	XB	1
	6-12633-7	Bracket Assembly	XN	1
10	AN6004-1	Regulator—Diluter demand oxygen GFE	All	1
11	AN6021-1A	Gage—Low pressure oxygen GFE	All	1
12	NO NUMBER	Indicator—Oxygen flow (Spec 40389) (Type A-1) GFE	All	1
13	42B3593-2	Lamp Assembly—Indicator GFE	XB	1
	AN3121-2	Lamp—T3 1-4 single-contact GFE	XN	1
	9-5876	Installation—Oxygen controls panel	All	NP
	9-5876-1	Installation—Oxygen controls panel	XL	NP
14	9-5876-13	Panel Assembly—Oxygen controls (used on 9-5876)	All	1
15	9-5876-19	Panel Assembly—Oxygen controls (used on 9-5876-1)	UL	1
	9-5876-23	Panel Assembly—Oxygen controls (used on 9-5876-1)	XM	1
16	AN6004-1	Regulator—Diluter demand oxygen GFE	All	1
17	NO NUMBER	Gage—Oxygen pressure (Spec 27368) (Type K-1) GFE	All	1
18	AN6029-1	Indicator—Oxygen flow GFE	All	1
	9-5523	Installation—Oxygen equipment bracket	XL	NP
19	9-5523-8	Regulator Assembly—Oxygen	All	1
20	AN6004-1	Regulator—Diluter demand oxygen GFE	All	1
21	9-5523-7	Panel Assembly—Oxygen equipment	VL	1
	9-5523-11	Panel Assembly—Oxygen equipment	XN	1
22	AN6021-1A	Gage—Low pressure oxygen GFE	All	1
23	AN6029-1	Indicator—Oxygen flow GFE	All	1
24	42B3593-2	Lamp Assembly—Indicator GFE	VL	1
	AN3121-313	Lamp—T3 1-4 single-contact GFE	XN	1
	15-16139	Installation—Oxygen regulator panel	XL	NP
25	15-16139-1	Panel Assembly—Oxygen regulator	VL	1
	15-16139-7	Panel Assembly—Oxygen regulator	XN	1
26	AN6004-1	Regulator—Diluter demand oxygen GFE	All	2
27	AN6021-1A	Gage—Low pressure oxygen GFE	All	1
28	AN6029-1	Indicator—Oxygen flow GFE	All	2
29	42B3593-2	Lamp Assembly—Indicator GFE	VL	1
	AN3121-313	Lamp—T3 1-4 single-contact GFE	XN	1
	15-13876	Installation—Bombardiers equipment panel (see fig. 132)	AL	NP
	15-13876-1	Panel Assembly—Bombardier equipment	XK	1
	15-13876-10	Panel Assembly—Bombardier equipment	AN	1
	15-13876-13	Panel Assembly—Bombardier equipment	VN	1
	15-13876-12	Panel Assembly—Bombardier equipment	MP	1
30	AN6004-1	Regulator—Diluter demand oxygen GFE	All	1
31	AN6021-1A	Gage—Low pressure oxygen GFE	All	1
32	AN6029-1	Indicator—Oxygen flow GFE	All	1
33	42B3593-2	Lamp Assembly—Indicator GFE	YK	1
	AN3121-313	Lamp—T3 1-4 single-contact	YK	1
	7-2014	Installation—Oxygen panel	AB	NP
	7-2014-7	Panel Assembly	All	1
34	NO NUMBER	Gage—Oxygen pressure (Spec 27368) (Type K-1) GFE	All	1
35	NO NUMBER	Indicator—Oxygen flow (Spec 40427) (Type A-3) GFE	All	1
36	42B3593-2	Lamp Assembly—Indicator GFE	All	1
	AN3121-313	Lamp—T3 1-4 single-contact GFE	All	1
	6-13839	Installation—Oxygen gages panel	JB	NP
	9-9177	Installation—Oxygen gages panel	XL	NP
37	6-13839-3	Panel Assembly—Oxygen gages (used on 6-13839)	JB	1
38	9-9177-1	Panel Assembly—Oxygen gages (used on 9-9177)	VL	1
	9-9177-2	Panel Assembly—Oxygen gages (used on 9-9177)	XN	1
39	AN6021-1A	Gage—Low pressure oxygen GFE	All	1
40	AN6029-1	Indicator—Oxygen flow GFE	All	1
41	42B3593-2	Lamp Assembly—Indicator GFE	XB	1
	AN3121-313	Lamp—T3 1-4 single-contact GFE	XB	1
	6-12648	Installation—Oxygen instrument panel	OA	NP
	6-12648-1	Installation—Oxygen instrument panel	OA	NP
42	6-12648-7	Panel Assembly—Oxygen instrument (used on 6-12648)	All	1
43	6-12648-6	Panel Assembly—Oxygen instrument (used on 6-12648-1)	All	1
44	AN6021-1	Gage—Low pressure oxygen GFE	All	1
45	NO NUMBER	Indicator—Oxygen flow (Spec 40427) (Type A-3) GFE	All	1
46	42B3593-2	Lamp Assembly—Indicator GFE	All	1
	AN3121-313	Lamp—T3 1-4 single-contact GFE	All	1
	9-9184	Installation—Navigators oxygen gages panel	WL	NP
	9-9872	Installation—Navigators oxygen gages bracket	WP	NP
47	9-9184-1	Panel Assembly—Navigators oxygen gages (used on 9-9184)	VL	1
	9-9184-2	Panel Assembly—Navigators oxygen gages (used on 9-9184)	UN	1
48	9-9872-1	Bracket Assembly—Navigators oxygen gages (used on 9-9872)	WP	1
49	NO NUMBER	Gage—Oxygen pressure (Spec 27368) (Type K-1) GFE	All	1
50	AN6029-1	Indicator—Oxygen flow GFE	All	1
51	42B3593-2	Lamp Assembly—Indicator GFE	VL	1
	AN3121-313	Lamp—T3 1-4 single-contact GFE	VL	1
52	15-13096-6	Panel Assembly—Waist gunners (see fig. 132)	CJ	Ref
	15-13096-13	Panel Assembly—Waist gunners (see fig. 132)	YN	Ref
	15-13096-14	Panel Assembly—Waist gunners (see fig. 132)	WQ	Ref
53	AN6004-1	Regulator—Diluter demand oxygen GFE	KJ	1
54	NO NUMBER	Gage—Oxygen pressure (Spec 27368) (Type K-1) GFE	KJ	1
55	NO NUMBER	Indicator—Oxygen flow (Spec 40427) (Type A-3) GFE	KJ	1

PUBLISHED BY AVIALOGS.COM

FUSELAGE

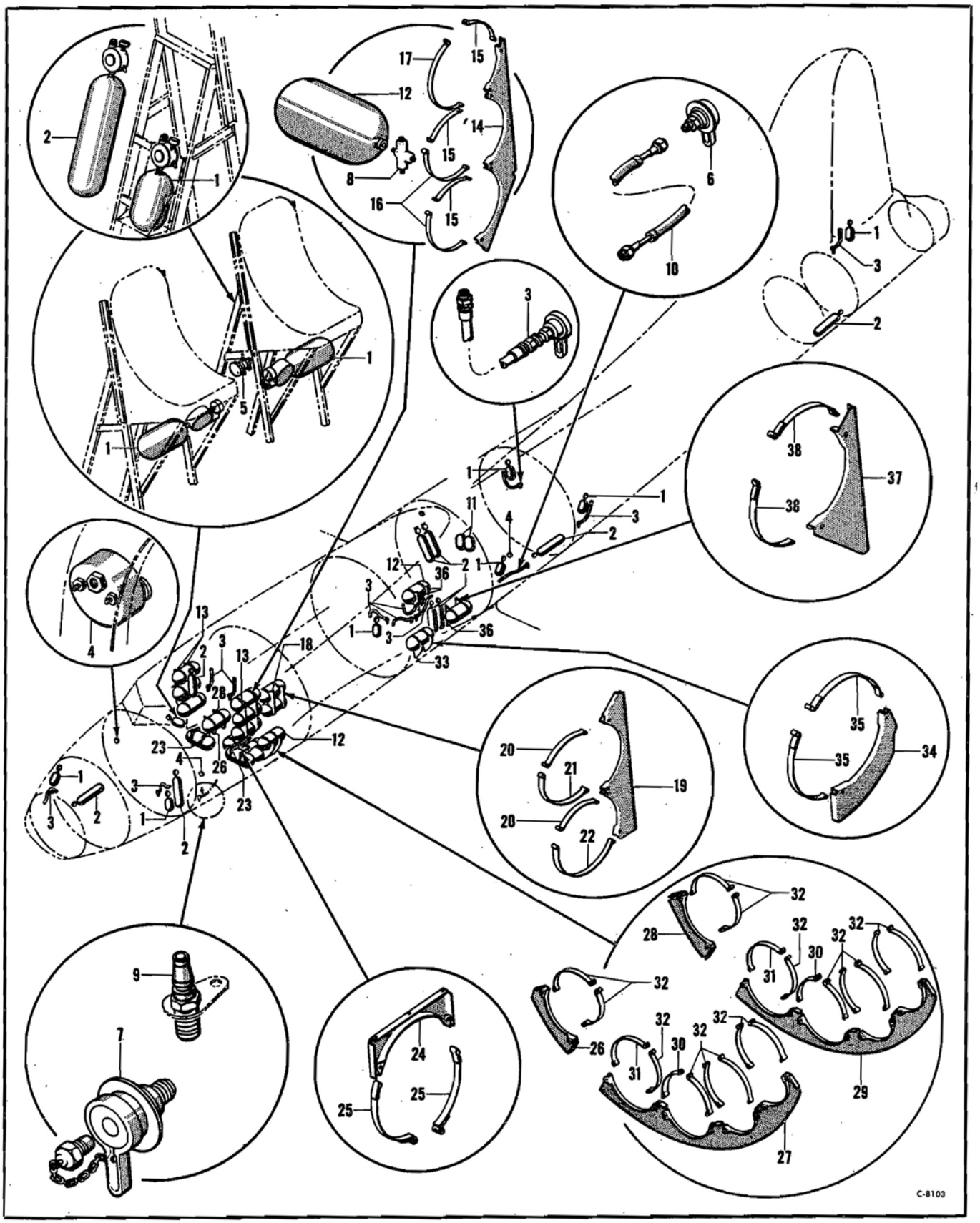

Figure 134—Miscellaneous Oxygen Equipment

PUBLISHED BY AVIALOGS.COM

FUSELAGE

Miscellaneous Oxygen Equipment

Figure & Index No.	Part Number	1 2 3 4 5 6 7 Nomenclature	Usage Code	Units Per Assy.
		Miscellaneous Oxygen Equipment		
	55-7365	Installation—Oxygen tubing	All	NP
134-1	AN6020-1	Cylinder and Regulator Assembly—Portable oxygen GFE	LC	10
2	44C7367	Cylinder and Regulator Assembly—Portable oxygen GFE	MP	10
3	AN6041-1	Recharger Assembly—Portable oxygen	All	11
4	NO NUMBER	Signal Assy—Oxygen pressure (Spec 32376) (Type G-1) GFE	SC	4
	15-16593	Installation—Oxygen shut-off valve	HM	NP
	15-16593-1	Valve Assembly—Oxygen shut-off	GM	1
	15-16593-3	Valve Assembly—Oxygen shut-off	RP	1
5	NO NUMBER	Valve—Oxygen shut-off (Spec 40386) GFE	GM	1
	15-16593-2	Valve—Oxygen shut-off	RP	1
6	1660-197	Valve—Filler (Schrader)	U	1
7	1660	Valve—Filler (Schrader)	All	1
8	2181	Valve—Dual check (Schrader)	All	18
	3-19279	Installation—Oxygen adapter	All	NP
	3-19279-1	Adapter Assembly—Oxygen	All	1
9	42A6950	Adapter—Oxygen GFE	All	1
10	3-14230	Hose Assembly—Flexible metal	U	1
11	NO NUMBER	Bottle—Oxygen (Spec 94-40330) (Type F-1) GFE	U	2
	15-7522	Installation—Oxygen bottle	All	NP
12	NO NUMBER	Cylinder—Oxygen (Spec 40321) (Type G-1) GFE	All	18
	15-7533-1	Installation—Oxygen cylinder cradle (LH)	All	NP
	15-7533-2	Installation—Oxygen cylinder cradle (RH)	All	NP
	15-7533-3	Installation—Oxygen cylinder cradle (LH)	All	NP
13	15-7533-8	Cradle Assembly—Oxygen cylinder (used on 15-7533-1 and 15-7533-2)	All	2
14	15-7533-11	Cradle	All	1
15	3-20139-12	Strap Assembly	ZC	3
	6-22008-2	Strap Assembly	HQ	3
16	3-20139-17	Strap Assembly	ZC	2
	6-22008-12	Strap Assembly	HQ	2
17	3-20139-20	Strap Assembly	ZC	1
	6-22008-18	Strap Assembly	HQ	1
18	15-17533-6	Cradle Assembly—Oxygen cylinder (used on 15-7533-3)	All	2
19	15-17533-7	Cradle	EA	1
	15-17533-12	Cradle	QH	1
20	3-20139-11	Strap Assembly	ZC	2
	6-22008	Strap Assembly	HQ	2
21	3-20139-18	Strap Assembly	ZC	1
	6-22008-14	Strap Assembly	HQ	1
22	3-20139-19	Strap Assembly	ZC	1
	6-22008-16	Strap Assembly	HQ	1
	9-3441	Installation—Oxygen cylinder cradle	All	NP
23	9-3441-1	Cradle Assembly	All	4
24	9-3441-3	Cradle	All	1
25	3-20139-14	Strap Assembly	ZC	2
	6-22008-6	Strap Assembly	HQ	2
	15-7373-25	Installation—Oxygen cylinder bracket (see fig. 71)	All	NP
26	15-7373-17	Support—Forward	All	1
	15-7373-26	Support Assembly—Forward	All	1
27	15-7373-19	Support—Forward	All	1
28	15-7373-20	Support—Rear	XA	1
	15-7373-28	Support—Rear	PK	1
	15-7373-27	Support Assembly—Rear	All	1
29	15-7373-21	Support—Rear	All	1
30	3-20139-13	Strap Assembly	ZC	2
	6-22008-4	Strap Assembly	HQ	2
31	3-20139-16	Strap Assembly	ZC	2
	6-22008-10	Strap Assembly	HQ	2
32	3-20139-15	Strap Assembly	ZC	16
	6-22008-8	Strap Assembly	HQ	16
	15-7577	Installation—Oxygen cylinder bracket (see fig. 71)	All	NP
33	15-7577-1	Bracket Assembly	All	2
34	15-7577-3	Bracket	All	1
35	3-20139-15	Strap Assembly	ZC	2
	6-22008-8	Strap Assembly	HQ	2
	15-7588-1	Installation—Oxygen cylinder cradle (see fig. 73)	All	NP
	15-7588-2	Installation—Oxygen cylinder cradle (see fig. 73)	All	NP
36	15-7588-3	Cradle Assembly	All	2
37	15-7588-5	Cradle	All	1
38	3-20139-14	Strap Assembly	ZC	2
	6-22008-6	Strap Assembly	HQ	2

PUBLISHED BY AVIALOGS.COM

FUSELAGE

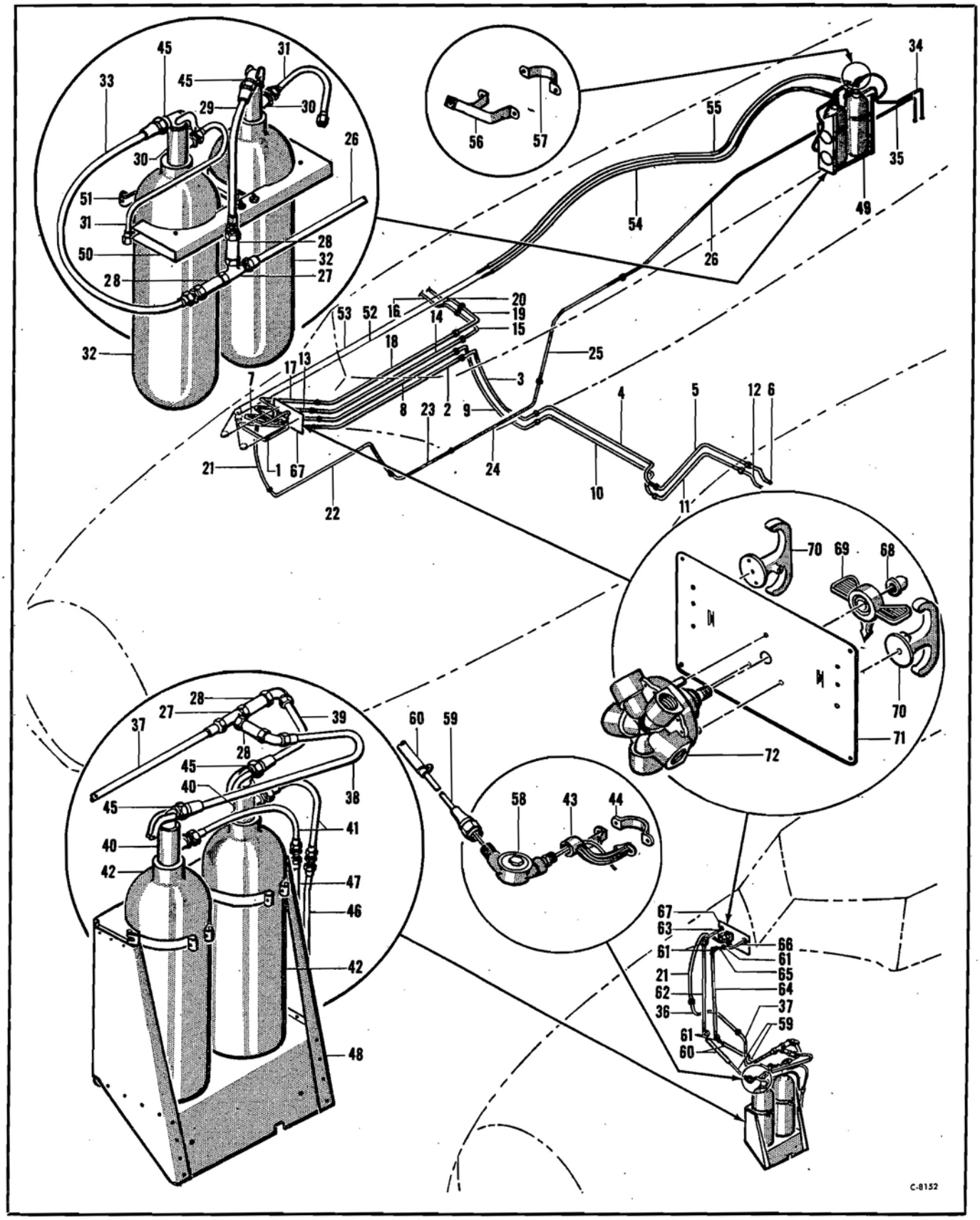

Figure 135—Engine Fire Extinguisher and Control

PUBLISHED BY AVIALOGS.COM

FUSELAGE

Engine Fire Extinguisher and Control

Figure & Index No.	Part Number	1 2 3 4 5 6 7 Nomenclature	Usage Code	Units Per Assy.
		Engine Fire Extinguisher and Control		
	65-5679	Installation—Engine fire extinguisher	LI	NP
135-1	65-5679-571	Tube Assembly (to engine no. 1)	LI	1
2	65-5679-562	Tube Assembly (to engine no. 1)	LI	1
3	65-5679-573	Tube Assembly (to engine no. 1)	KI	1
	65-5679-598	Tube Assembly (to engine no. 1)	XM	1
4	65-5679-574	Tube Assembly (to engine no. 1)	KI	1
	65-5679-599	Tube Assembly (to engine no. 1)	XM	1
5	65-5679-557	Tube Assembly (to engine no. 1)	LI	1
6	65-5679-558	Tube Assembly (to engine no. 1) (see fig. 51)	LI	Ref
7	65-5679-554	Tube Assembly (to engine no. 2)	LI	1
8	65-5679-563	Tube Assembly (to engine no. 2)	LI	1
9	65-5679-564	Tube Assembly (to engine no. 2)	KI	1
	65-5679-596	Tube Assembly (to engine no. 2)	XM	1
10	65-5679-565	Tube Assembly (to engine no. 2)	KI	1
	65-5679-597	Tube Assembly (to engine no. 2)	XM	1
11	65-5679-556	Tube Assembly (to engine no. 2)	LI	1
12	65-5679-559	Tube Assembly (to engine no. 2) (see fig. 51)	LI	Ref
13	65-5679-592	Tube Assembly (to engine no. 3)	LI	1
14	65-5679-560	Tube Assembly (to engine no. 3)	LI	1
15	65-5679-567	Tube Assembly (to engine no. 3)	LI	1
16	65-5679-569	Tube Assembly (to engine no. 3) (see fig. 51)	LI	Ref
17	65-5679-540	Tube Assembly (to engine no. 4)	LI	1
18	65-5679-561	Tube Assembly (to engine no. 4)	LI	1
19	65-5679-568	Tube Assembly (to engine no. 4)	LI	1
20	65-5679-570	Tube Assembly (to engine no. 4) (see fig. 51)	LI	Ref
21	65-5679-537	Tube Assembly (from cylinder)	LI	1
22	65-5679-544	Tube Assembly (from cylinder)	KI	1
23	65-5679-542	Tube Assembly (from cylinder)	KI	1
24	65-5679-535	Tube Assembly (from cylinder)	KI	1
25	65-5679-522	Tube Assembly (from cylinder)	KI	1
26	65-5679-402	Tube Assembly (from cylinder)	KI	1
27	8-6-6RST-D	Tee (Parker)	LI	1
28	20122	Valve Assembly—Check (Walter Kidde Co.) GFE	LI	2
29	65-5679-400	Tube Assembly	KI	1
	65-5679-467	Cylinder Assembly—Extinguisher	KI	2
30	38B6205-1	Valve Assembly—Carbon dioxide GFE	LI	1
31	37A5751	Tube Assembly—Carbon dioxide valve safety outlet flexible GFE	LI	1
32	60870	Cylinder Assembly (Walter Kidde Co.) GFE	LI	1
33	65-5679-401	Tube Assembly	KI	1
34	65-5679-521	Tube Assembly (drain)	KI	1
35	65-5679-520	Tube Assembly (drain)	KI	1
36	65-5679-589	Tube Assembly (from cylinder)	XM	1
37	65-5679-588	Tube Assembly (from cylinder)	XM	1
38	65-5679-587	Tube Assembly (from cylinder)	XM	1
39	65-5679-590	Tube Assembly (from cylinder)	XM	1
	65-5679-595	Cylinder Assembly—Extinguisher	XM	2
40	38B6205-1	Valve Assembly—Carbon dioxide GFE	LI	1
41	37A5751	Tube Assembly—Carbon dioxide valve safety outlet flexible GFE	LI	1
42	60870	Cylinder Assembly (Walter Kidde Co.) GFE	LI	1
43	38A3408	Bracket—Carbon dioxide valve control cable GFE	XM	2
44	37A1736	Clamp—Carbon dioxide valve control cable (bracket) GFE	XM	2
45	37A6330	Sleeve—Carbon dioxide valve outlet union GFE	LI	2
46	65-5679-593	Tube Assembly (drain)	XM	1
47	65-5679-594	Tube Assembly (drain)	XM	1
	15-14623	Installation—Engine fire extinguisher bracket	XM	NP
48	15-14623-1	Bracket Assembly—Engine fire extinguisher	XM	1
49	55-5785-406	Support Assembly—Cylinder (see fig. 74)	KI	Ref
50	6-8134	Bracket Assembly—Carbon dioxide cylinder	KI	1
51	41-9916	Strap Assembly—Bracket	KI	2
	65-5715	Installation—Fire extinguisher control system	KI	NP
52	65-5715-501	Control Assembly—LH handle	KI	1
53	65-5715-502	Control Assembly—RH handle	KI	1
54	65-5715-507	Cable Assembly (LH)	KI	1
55	65-5715-508	Cable Assembly (RH)	KI	1
	3-10758	Support Assembly—Carbon dioxide bottle control	KI	2
56	3-10758-1	Bracket Assembly—Control	KI	1
57	3-10758-2	Clamp—Control	KI	1
	15-14655	Installation—Fire extinguisher control	XM	NP
58	18174	Pulley Assembly (Walter Kidde Co.)	XM	2
59	15-14655-6	Tube Assembly—Fire extinguisher	XM	2
60	3-27139	Tube Assembly—Fire extinguisher	XM	2
61	17269	Pulley Assembly (Walter Kidde Co.)	XM	5
62	15-14655-4	Tube Assembly—Fire extinguisher	XM	1
63	15-14655-1	Tube Assembly—Fire extinguisher	XM	1
64	15-14655-5	Tube Assembly—Fire extinguisher	XM	1
65	15-14655-3	Tube Assembly—Fire extinguisher	XM	1
66	15-14655-2	Tube Assembly—Fire extinguisher	XM	1
67	2CD5016	Panel Assembly—Control (American LaFrance-Foamite Corp.) GFE (see fig. 117)	LI	Ref
68	2CD2948	Nut—Control handle lock (American LaFrance-Foamite Corp.) GFE	LI	1
69	2CD2868	Handle—Control (American LaFrance-Foamite Corp.) GFE	LI	1
70	2CD5033	Handle Assembly—Pull (American LaFrance-Foamite Corp.) GFE	LI	2
71	2CD2934	Plate—Control panel name (American LaFrance-Foamite Corp.) GFE	LI	1
72	2CD5038	Valve—Selector (American LaFrance-Foamite Corp.) GFE	LI	1

PUBLISHED BY AVIALOGS.COM

FUSELAGE

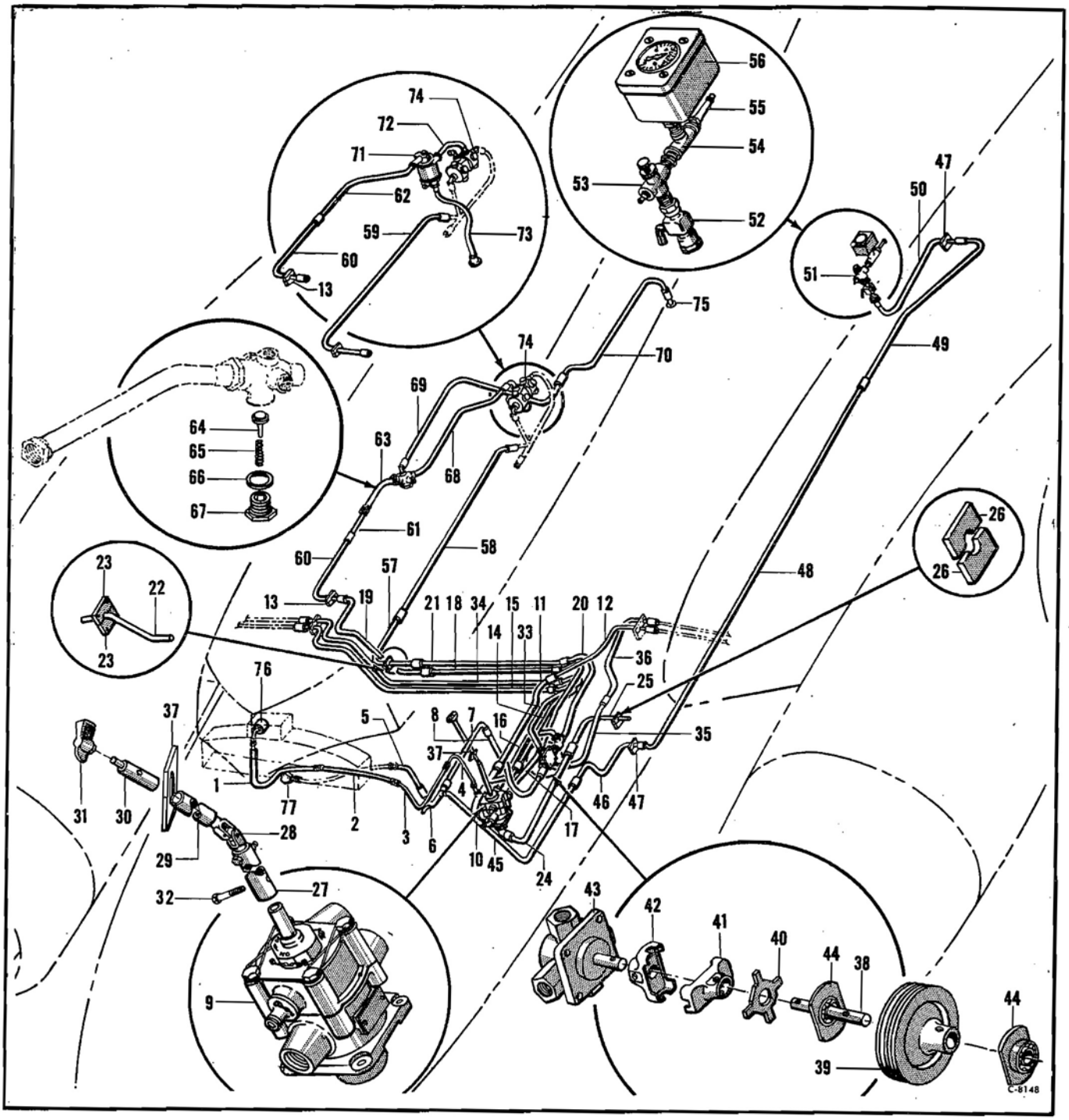

Figure 136—Vacuum System

Vacuum System

Figure & Index No.	*Part Number*	*1 2 3 4 5 6 7*	*Nomenclature*	*Usage Code*	*Units Per Assy.*
			Vacuum System		
	65-5594		Installation—Vacuum system tubing	All	NP
	15-7515		Installation—De-icer and vacuum valve	All	NP
136-1	15-7515-35		Tube Assembly	All	1
2	15-7515-34		Tube Assembly	QB	1
	15-7515-44		Tube Assembly	XM	1
3	15-7515-16		Tube Assembly	QB	1
	15-7515-52		Tube Assembly	XM	1

PUBLISHED BY AVIALOGS.COM

FUSELAGE

Vacuum System

Figure & Index No.	Part Number	1 2 3 4 5 6 7 Nomenclature	Usage Code	Units Per Assy.
	15-7515-43	Tube Assembly	XM	1
136-4	15-7515-15	Tube Assembly	All	1
5	15-7515-17	Tube Assembly	All	1
6	15-7515-29	Tube Assembly	All	1
7	15-7515-1	Tube Assembly	All	1
8	15-7515-40	Tube Assembly	All	1
	15-7515-36	Valve Assembly	All	1
9	577-2	Valve Assembly—De-icer (Eclipse) (see T.O. 03-35B-4)	All	1
10	6-9392	Manifold Assembly—Vacuum system	All	1
11	15-7515-14	Tube Assembly	All	1
12	15-7515-24	Tube Assembly	All	1
13	1-27613	Fairlead—Vacuum and de-icer (RH)	All	2
14	15-7515-12	Tube Assembly	All	1
15	15-7515-13	Tube Assembly	QB	1
	15-7515-48	Tube Assembly	XM	1
	15-7515-50	Tube Assembly	XM	1
16	15-7515-38	Tube Assembly	All	1
17	15-7515-31	Tube Assembly	All	1
18	15-7515-32	Tube Assembly	QB	1
	15-7515-46	Tube Assembly	XM	1
19	15-7515-11	Tube Assembly	QB	1
	15-7515-45	Tube Assembly	XM	1
20	15-7515-30	Tube Assembly	All	1
21	15-7515-33	Tube Assembly	QB	1
	15-7515-47	Tube Assembly	XM	1
22	15-7515-53	Tube Assembly	XM	1
23	41-9290-4	Fairlead (RH)	All	2
24	15-7515-39	Tube Assembly	All	1
25	15-7515-19	Tube Assembly	All	1
26	1-19001-13	Fairlead Assembly—1 hole (LH)	All	1
	15-7515-37	Shaft Assembly	All	1
27	51-205-2	Shaft—De-icer valve control	All	1
28	270B8	Joint—Universal (Apex)	All	1
29	51-205-1	Shaft—De-icer valve control	All	1
30	41-8959-1	Shaft—De-icer valve control	All	1
31	066654	Handle	All	1
32	AN3-10A	Bolt—Aircraft	All	4
33	15-7515-42	Tube Assembly	All	1
34	15-7515-6	Tube Assembly	QB	1
	15-7515-51	Tube Assembly	XM	1
	15-7515-49	Tube Assembly	XM	1
35	15-7515-3	Tube Assembly	All	1
36	15-7515-4	Tube Assembly	All	1
37	41-7804-1	Fairlead—Valve shaft	All	1
	15-7579	Installation—Vacuum selector valve support	All	NP
	15-7579-1	Support Assembly	All	1
38	41-4023-3-4	Shaft	All	1
39	1-18246	Drum	All	1
40	41-4234	Driver—Coupling yoke	All	1
41	41-4231	Yoke—Fuel valve coupling	All	1
42	41-4231-3	Yoke—Fuel valve coupling	All	1
43	B2-1741-1	Valve—Selector (Parker) (see fig. 137)	All	1
	15-7579-13	Bracket Assembly	All	1
	15-7579-3	Plate Assembly	All	1
	15-7579-4	Plate Assembly	All	1
44	1-16656	Housing Assembly—Bearing (used on 15-7579-3 and 15-7579-4)	EA	1
	1-29922	Bearing—Phenolic (used on 15-7579-3 and -4)	QH	1
45	65-5594-500	Tube Assembly	All	1
46	65-5594-501	Tube Assembly	All	1
47	41-9290-3	Fairlead	All	4
48	65-5594-502	Tube Assembly	QB	1
	65-5594-606	Tube Assembly	XM	1
49	65-5594-503	Tube Assembly	QB	1
	65-5594-607	Tube Assembly	XM	1
50	65-5594-601	Tube Assembly	All	1
	9-5644	Installation—Camera control gage	All	NP
51	9-5644-3	Gage Assembly	All	1
52	765-11	Cock—Shut off	All	1
53	38A6133	Valve Assembly—Vacuum	All	1
54	AN917-1	Fitting—Pipe	All	1
55	AN840-4	Adapter—Hose to pipe thread	All	1
56	AN5771-5A	Gage—Single pressure GFE	All	1
57	65-5594-599	Tube Assembly	QB	1
58	65-5594-600	Tube Assembly	QB	1
59	65-5594-604	Tube Assembly (replaces 65-5594-599 and 65-5594-600)	XM	1
60	65-5594-544	Tube Assembly	All	1
61	65-5594-520	Tube Assembly	BC	1
62	65-5594-619	Tube Assembly	NO	1
63	46-6684-405	Separator Assembly—Oil	BC	1
64	41-9962	Valve—Oil separator	BC	1
65	41-4971	Spring—Compression	BC	1
66	46-6684-8	Washer	BC	1
67	41-4972	Cap—Oil separator	BC	1
68	65-5594-571	Tube Assembly	BC	1
69	65-5594-597	Tube Assembly	OA	1
	65-5594-572	Tube Assembly	XI	1
	65-5594-608	Tube Assembly	SM	1
70	65-5594-598	Tube Assembly	OA	1
	65-5594-523	Tube Assembly	XI	1
	65-5594-609	Tube Assembly	SM	1
	9-8965	Installation—De-icer pressure separator	NO	NP
	9-8965-1	Separator Assembly	NO	1
71	E120386	Separator Assy—Oil (Eclipse) (see T.O. 03-1-5)	NO	1
72	65-5594-620	Tube Assembly	NO	1
73	65-5594-621	Tube Assembly	NO	1
74	574-2	Valve Assembly—De-icer distributor (Eclipse) (see T.O. 03-35B4) (see fig. 139)	All	Ref
75	1-18757	Fitting—Tube end	BC	1
76	AN5771-3A	Gage—Single pressure (de-icer) GFE (see fig. 109)	NO	Ref
77	3-13662	Manifold (see fig. 107)	All	Ref

PUBLISHED BY AVIALOGS.COM

FUSELAGE

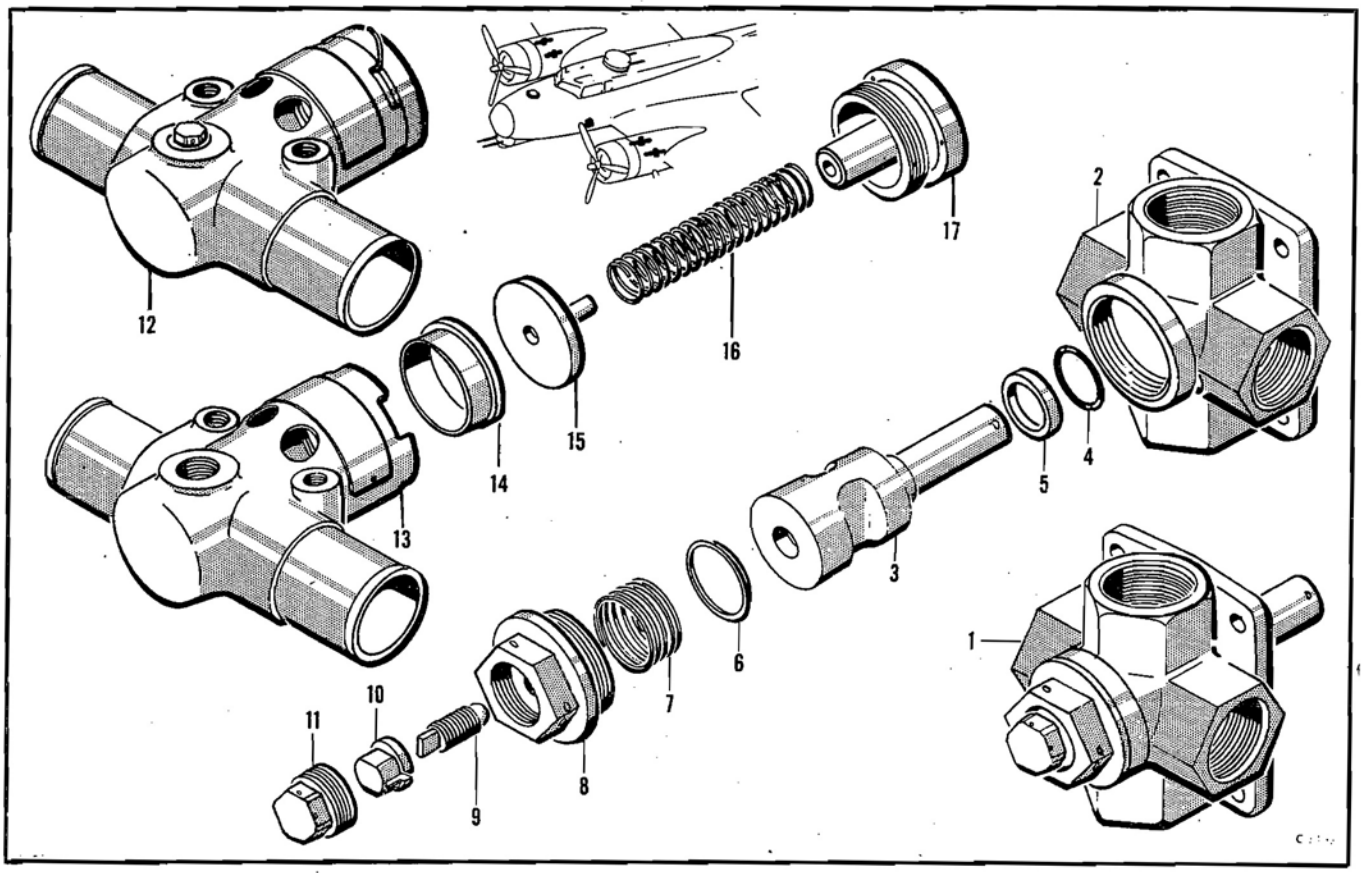

Figure 137—Vacuum Selector and Safety Valve Assemblies

Vacuum Selector and Safety Valve Assemblies

Figure & Index No.	*Part Number*	*1 2 3 4 5 6 7 Nomenclature*	*Usage Code*	*Units Per Assy.*
		Vacuum Selector and Safety Valve Assemblies		
137-1	B2-1741-1	Valve Assembly—Vacuum selector (Parker) (see fig. 136)	All	Ref
	11-642-85	Body Assembly	All	1
2	11-1638-11-4D3	Body	All	1
3	11-1140-20SS10	Plug	All	1
	11-1237-6SS2	Insert—Plug	All	1
4	4-1743-2P26	Ring—Sealing	All	1
5	4-1743-3D1	Retainer—Packing	All	1
6	12-638-2B18	Follower—Spring	All	1
7	8-441-15SS8	Spring	All	1
8	9-3038-9D1	Cap	All	1
9	9-3038-6SS10	Screw—Adjusting	All	1
10	9-3038-7D1	Plate—Lock	All	1
11	9-3038-8D1	Cap—Sealing	All	1
12	217HA	Valve Assembly—Safety (Pesco) (see fig. 52)	All	Ref
13	217-15	Body	All	1
14	217-3C	Seat—Valve	All	1
15	217-11	Valve and Stem Assembly	All	1
16	217-5J	Spring	All	1
17	217-16	Guide—Valve	All	1

PUBLISHED BY AVIALOGS.COM

FUSELAGE

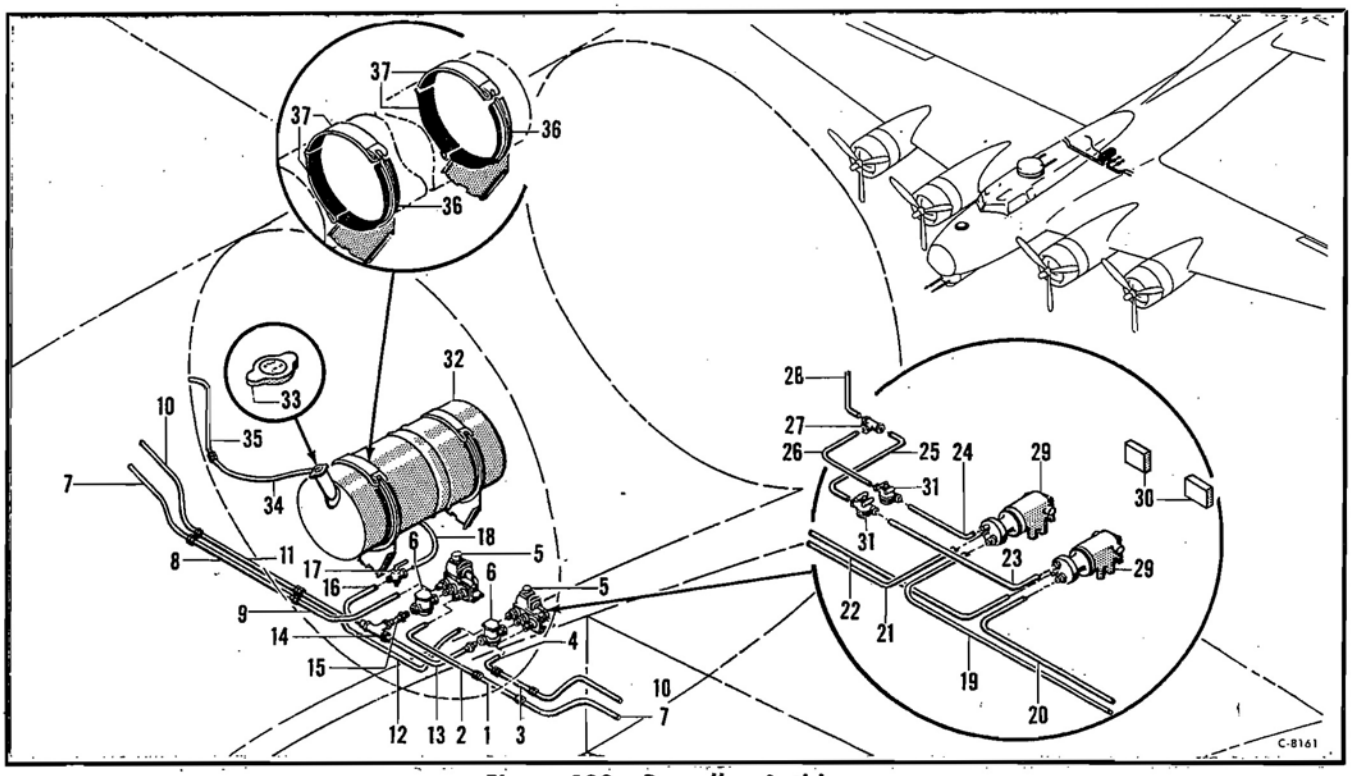

Figure 138—Propeller Anti-icer

Propeller Anti-icer

Figure & Index No.	*Part Number*	*1 2 3 4 5 6 7 Nomenclature*	*Usage Code*	*Units Per Assy.*
		Propeller Anti-icer		
	65-5660	Installation—Propeller anti-icer	All	NP
138-1	65-5660-524	Tube Assembly (to engine no. 1)	All	1
2	65-5660-502	Tube Assembly (to engine no. 1)	CB	1
3	65-5660-533	Tube Assembly (to engine no. 2)	All	1
4	65-5660-501	Tube Assembly (to engine no. 2)	CB	1
5	744-6	Pump Assembly—Propeller anti-icer (Eclipse) (see T.O. 03-1-5)	CB	2
6	712-1A	Filter Assembly—Propeller anti-icer (Eclipse)	CB	2
7	65-5660-49	Tube Assembly (to engine no. 1 and 4) (see fig. 49)	All	Ref
8	65-5660-29	Tube Assembly (to engine no. 4)	All	1
9	65-5660-504	Tube Assembly (to engine no. 4)	CB	1
10	65-5660-51	Tube Assembly (to engine no. 2 and 3) (see fig. 49)	All	Ref
11	65-5660-522	Tube Assembly (to engine no. 3)	All	1
12	65-5660-503	Tube Assembly (to engine no. 3)	CB	1
13	65-5660-409	Tube Assembly (tank to filter)	CB	1
14	811JT6D	Tee	CB	1
15	65-5660-414	Tube Assembly (tank to filter)	CB	1
16	65-5660-521	Tube Assembly (tank to filter)	CB	1
17	765-2	Cock—Drain	CB	1
18	65-5660-536	Tube Assembly (tank to filter)	CB	1
19	65-5660-554	Tube Assembly (to engine no. 1)	IL	1
20	65-5660-555	Tube Assembly (to engine no. 2)	IL	1
21	65-5660-561	Tube Assembly (to engine no. 3)	IL	1
22	65-5660-562	Tube Assembly (to engine no. 4)	IL	1
23	65-5660-556	Tube Assembly (pump to filter)	IL	1
24	65-5660-557	Tube Assembly (pump to filter)	IL	1
25	65-5660-558	Tube Assembly (tank to filter)	IL	1
26	65-5660-559	Tube Assembly (tank to filter)	IL	1
27	811JT4D	Tee	IL	1
28	65-5660-560	Tube Assembly (tank to filter)	IL	1
	9-6719	Installation—Propeller anti-icer pump	IL	NP
	9-6719-1	Pump Assembly—Anti-icer	IL	1
29	AN6100-1	Pump Assembly—Fluid metering (propeller anti-icer)	IL	2
30	CA275X	Capacitor (P. R. Mallory)	NO	2
	6-16364	Installation—Propeller anti-icer filter	IL	NP
	6-16364-1	Filter Assembly—Propeller anti-icer	IL	2
31	AN6101-1	Filter Assembly—Fluid metering pump (anti-icer)	IL	1
32	64-1332-504	Tank Assembly—Propeller anti-icing	All	1
	1-22655-2	Cap Assembly—Tank filler	All	1
33	42B3581	Cap—Tank	All	1
34	65-5660-531	Tube Assembly—Vent	All	1
35	65-5660-529	Tube Assembly—Vent	All	1
	6-8143	Installation—Anti-icing tank cradle (see fig. 66)	All	NP
36	6-8143-7	Cradle Assembly—Anti-icing tank	All	2
37	3-11991	Strap Assembly—Anti-icing tank	All	4

PUBLISHED BY AVIALOGS.COM

FUSELAGE

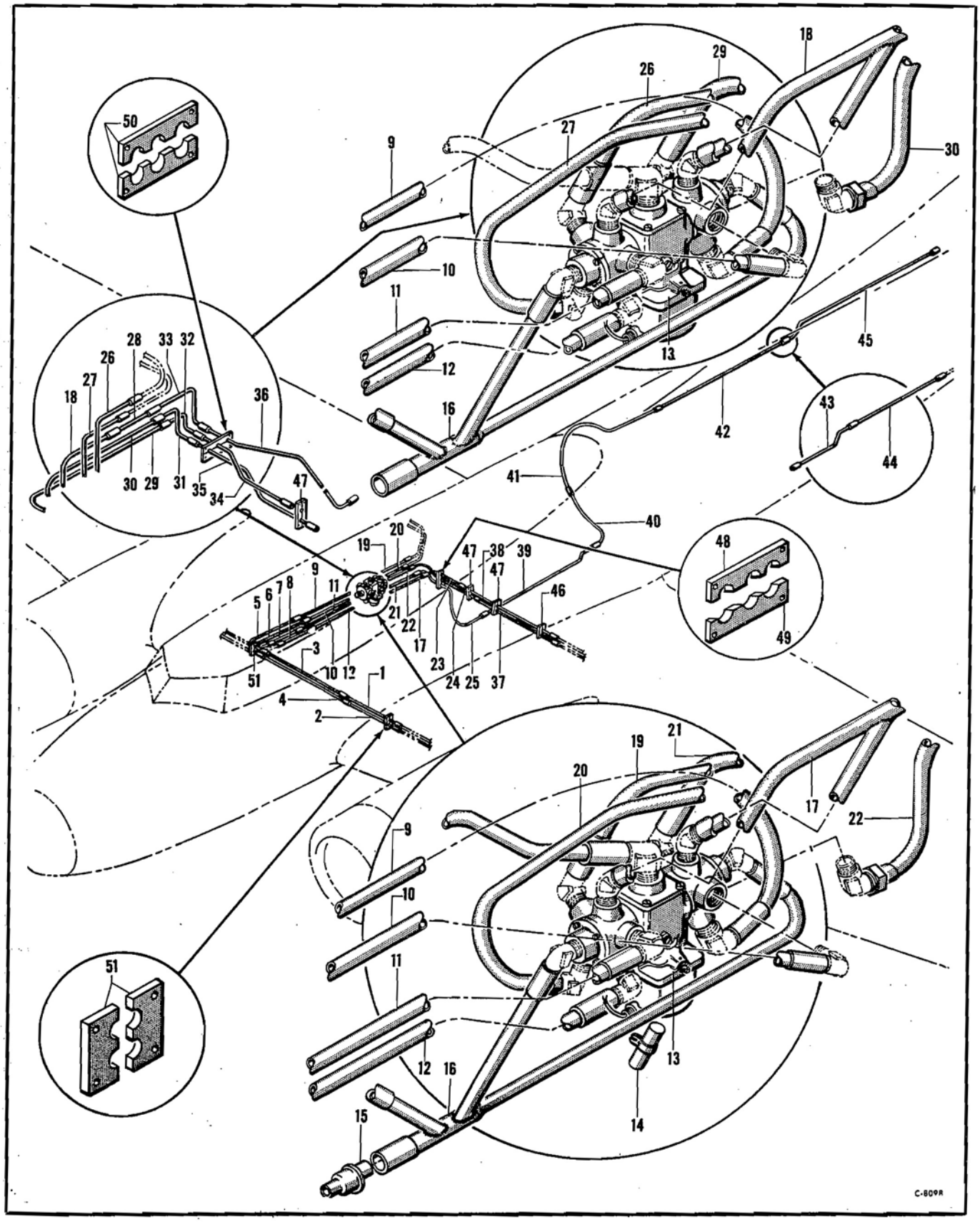

Figure 139—Fuselage De-icer System

PUBLISHED BY AVIALOGS.COM

FUSELAGE

Fuselage De-icer System

Figure & Index No.	Part Number	1 2 3 4 5 6 7 Nomenclature	Usage Code	Units Per Assy.
		Fuselage De-icer System		
	15-7600	Installation—Wing and tail de-icer	All	NP
139-1	15-7600-189	Tube	All	1
2	15-7600-187	Tube	All	1
3	15-7600-188	Tube	All	1
4	15-7600-186	Tube	All	1
5	15-7600-132	Tube	All	1
6	15-7600-125	Tube	All	1
7	15-7600-144	Tube	All	1
8	15-7600-139	Tube	All	1
9	15-7600-131	Tube	All	1
10	15-7600-193	Tube	All	1
11	15-7600-192	Tube	All	1
12	15-7600-138	Tube	All	1
	49-3133	Installation—De-icer distributor valve	All	NP
	49-3133-420	Unit Assembly	All	1
13	574-2	Valve Assembly—De-icer distributor (Eclipse) (see T.O. 03-35B-4)	All	1
14	DL445	Filter (P. R. Mallory & Co.)	All	1
15	557-5	Valve—Check (Eclipse)	All	1
16	49-3133-414	Manifold Assembly	All	1
17	49-3133-417	Manifold Assembly	QB	1
18	49-3133-422	Manifold Assembly	XM	1
19	15-7600-191	Tube	QB	1
20	15-7600-89	Tube	QB	1
21	15-7600-62	Tube	QB	1
22	15-7600-190	Tube	QB	1
23	15-7600-74	Tube	QB	1
24	15-7600-61	Tube	QB	1
25	15-7600-90	Tube	QB	1
26	15-7600-229	Tube	XM	1
27	15-7600-231	Tube	XM	1
28	15-7600-255	Tube	XM	1
29	15-7600-256	Tube	XM	1
30	15-7600-250	Tube	XM	1
31	15-7600-257	Tube	XM	1
32	15-7600-258	Tube	XM	1
33	15-7600-253	Tube	XM	1
34	15-7600-221	Tube	XM	1
35	15-7600-220	Tube	XM	1
36	15-7600-222	Tube	XM	1
37	15-7600-73	Tube	QB	1
	15-7600-224	Tube	XM	1
38	15-7600-60	Tube	QB	1
	15-7600-223	Tube	XM	1
39	15-7600-91	Tube	QB	1
	15-7600-259	Tube	XM	1
40	15-7600-92	Tube	All	1
41	15-7600-93	Tube	All	1
42	15-7600-94	Tube	QB	1
43	15-7600-248	Tube	XM	1
44	15-7600-246	Tube	XM	1
45	15-7600-95	Tube	QB	1
	15-7600-263	Tube	XM	1
46	51-1095	Fairlead Assembly—1 in. diameter 2 tube	All	1
47	51-1094	Fairlead—1 in. diameter 2 tube	All	4
48	51-1096-1	Fairlead—1 in. diameter 3 tube	QB	1
49	51-1096-2	Fairlead—1 in. diameter 3 tube	QB	1
50	3-22492	Support Assembly—Tubing (2 pieces)	XM	1
51	41-8565	Fairlead Assembly—5-8 in. diameter 2 tube (2 pieces)	All	2

PUBLISHED BY AVIALOGS.COM

FUSELAGE

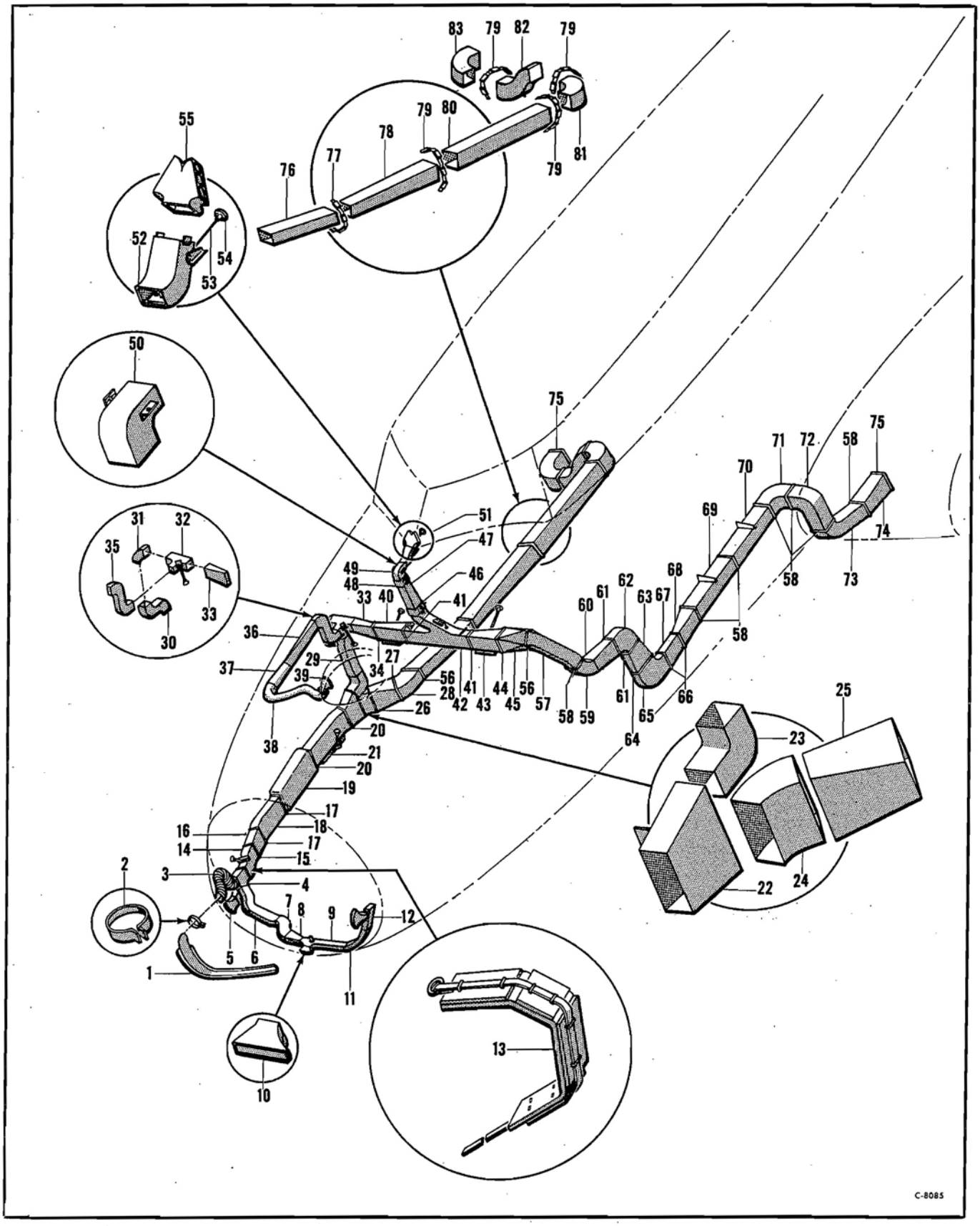

Figure 140—Forward Fuselage Heating and De-icing System

RESTRICTED
PUBLISHED BY AVIALOGS.COM

FUSELAGE

Forward Fuselage Heating and De-icing System

Figure & Index No.	Part Number	1 2 3 4 5 6 7 Nomenclature	Usage Code	Units Per Assy.
		Forward Fuselage Heating and De-icing System		
	15-12723	Installation—Heating and de-icing system	XM	NP
	15-12971	Installation—Nose defroster duct	XM	NP
	15-12972	Installation—Nose defroster outlet	RM	NP
	15-12972-8	Installation—Nose defroster outlet	IO	NP
140-1	15-12972-4	Duct Assembly—Nose defroster outlet	RM	1
	15-12972-9	Duct Assembly—Nose defroster outlet	IO	1
2	21-3339-106	Clamp—Round loop type	XM	1
3	3-23507	Hose Assembly—Air duct	XM	1
4	6-14428-9	Duct Assembly—Heat and vent	XM	1
5	3-23504	Outlet Assembly—Heat and vent	XM	1
6	6-16326-5	Duct Assembly—Heat and vent	XM	1
7	6-14420	Elbow Assembly—Heat and vent	XM	1
8	3-23470	Transition—Heat and vent	XM	1
9	6-14433-14	Tee Assembly—Heat and vent	XM	1
10	3-23509	Duct Assembly—Heat and vent	XM	1
11	6-14419-9	Elbow Assembly—Heat and vent	XM	1
12	6-14421	Duct Assembly—Nose defroster	XM	1
13	15-17138-7	Clamp Assembly—Duct joint	XP	1
	15-12779	Installation—Heat and vent duct	XM	NP
14	9-7093	Outlet Assembly—Heat and vent	XM	1
15	15-17138-7	Clamp Assembly—Duct joint	XP	1
16	3-23410	Transition Assembly	XM	1
17	15-17138-8	Clamp Assembly—Duct joint	XP	2
18	6-14370	Duct Assembly—Navigator	XM	1
19	6-17024	Transition Assembly—Heat and vent	XM	1
20	15-17138-9	Clamp Assembly—Duct joint	XP	2
21	9-7092	Outlet Assembly—Heat and vent	XM	1
22	6-14460	Transition Assembly—RH cabin air	QM	1
	6-16399	Elbow Assembly—Cabin air	QM	1
23	3-23549	Elbow Assembly—Station 2E	QM	1
24	6-14459	Elbow Assembly—RH cabin	QM	1
25	3-23543	Transition—RH cabin air	QM	1
26	15-12779-2	Duct Assembly—Weld	NO	1
27	15-17138-14	Clamp Assembly—Duct joint	XP	1
28	6-14458	Elbow Assembly—RH cabin air	XM	1
29	3-23550	Duct Assembly—Station 2E	XM	1
30	6-14461	Elbow Assembly—Cabin heat	XM	1
31	3-23551	Elbow Assembly—Station 2D	XM	1
32	9-7553	Tee Assembly—Astrodome heat	XM	1
33	3-26013	Transition—Heat and vent	XM	1
34	15-17138-2	Clamp Assembly—Duct joint	XP	1
	15-13856	Installation—Astrodome duct	XM	NP
35	6-16967	Duct Assembly—Heat and vent	XM	1
36	9-7556	Transition Assembly	XM	1
37	3-23846-1	Transition Assembly	XM	1
38	3-20213-2	Hose Assembly—Air duct	XM	1
39	6-12875-3	Outlet Assembly—Defroster	XM	1
	15-12774	Installation—Pilots heat duct	XM	NP
40	9-7084-1	Outlet Assembly—Pilots heat	XM	1
41	15-17138-7	Clamp Assembly—Duct joint	XP	1
42	9-7380	Tee Assembly—Pilots defroster	XM	1
43	9-7084	Outlet Assembly—Pilots heat	XM	1
44	15-17138-14	Clamp Assembly—Duct joint	XM	1
45	6-14374	Transition—Pilots heat	XM	1
	9-7381	Installation—Pilots defroster duct	XM	NP
46	3-24503-1	Clamp Assembly—Defroster duct	XM	1
47	3-24487	Transition—Heat and vent	XM	1
48	3-24503	Clamp Assembly—Defroster duct	XM	1
49	41-8395	Elbow Assembly—Defroster duct	VM	1
50	41-8395-6	Elbow Assembly—Defroster duct	CQ	1
	6-10474	Installation—Pilots defroster	XM	NP
51	6-10474-2	Duct Assembly—Pilots defroster	XM	1
	6-9481-12	Elbow Assembly	XM	1
52	6-9481-9	Elbow Assembly	XM	1
53	1-19655-1	Rod	XM	1
54	1-8579	Knob	XM	1
55	6-10430	Outlet	XM	1
56	15-17138-14	Clamp Assembly—Duct joint	XP	2
	15-12782	Installation—Duct station 2D-4 LH	XM	NP
57	9-7096	Elbow Assembly—Heat and vent	XM	1
58	15-17138-14	Clamp Assembly—Duct joint	XP	8
59	3-22484	Elbow Assembly—Heat and vent	XM	1
60	6-14375	Transition Assembly—Heat and vent	XM	1
61	15-17138-11	Clamp Assembly—Duct joint	XP	2
62	6-14376	Elbow Assembly—Heat and vent	XM	1
63	6-14377	Transition Assembly—Heat and vent	XM	1
64	15-17138-5	Clamp Assembly—Duct joint	XP	1
65	6-14378	Elbow Assembly—Heat and vent	XM	1
66	15-17138-4	Clamp Assembly—Duct joint	XP	2
67	3-11426	Duct Assembly—Heat and vent	XM	1
68	3-23423-5	Transition Assembly—Heat and vent	XM	1
69	3-23422-9	Duct Assembly—Heat and vent	XM	1
70	3-23422-8	Duct Assembly—Heat and vent	XM	1
71	6-14379-12	Elbow Assembly—Heat and vent	XM	1
72	6-14480	Elbow Assembly—Heat and vent	XM	1
73	6-14306	Elbow Assembly—Heat and vent	XM	1
74	6-14380	Transition Assembly—Heat and vent	XM	1
75	15-17138-15	Clamp Assembly—Duct joint	XP	2
	15-12947	Installation—Duct Station 4-3 RH	XM	NP
76	6-14452-1	Duct—RH cabin air	XM	1
77	15-17138-14	Clamp Assembly—Duct joint	XP	1
78	6-14453	Transition Assembly—RH cabin air	XM	1
79	15-17138-15	Clamp Assembly—Duct joint	XP	4
80	6-14454	Duct Assembly—RH cabin air	XM	1
81	6-14455	Elbow Assembly—RH cabin air	XM	1
82	6-14456	"S" Assembly—RH cabin air	XM	1
83	6-14457	Elbow Assembly—RH cabin air	XM	1

PUBLISHED BY AVIALOGS.COM

FUSELAGE

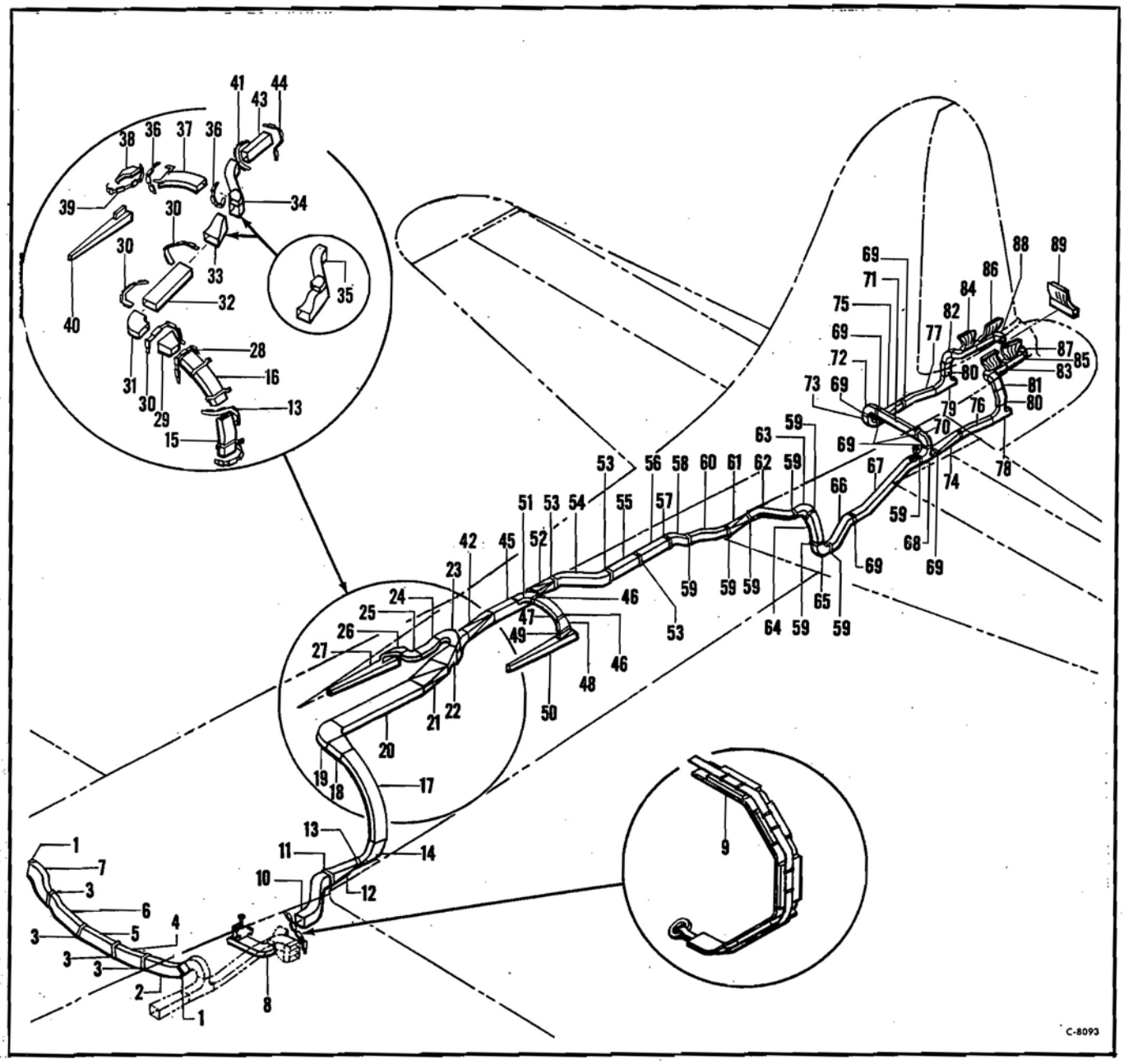

Figure 141—Aft Fuselage Heating and De-icing System

Aft Fuselage Heating and De-icing System

Figure & Index No.	*Part Number*	*1 2 3 4 5 6 7 Nomenclature*	*Usage Code*	*Units Per Assy.*
		Aft Fuselage Heating and De-icing System		
	15-12723	Installation—Heating and de-icing system	XM	NP
141-1	15-17138-8	Clamp Assembly—Duct joint	XP	2
	15-12711	Installation—Equalizer duct	XM	NP
2	6-14270-10	Duct Assembly—Equalizer	XM	1
3	15-17138-8	Clamp Assembly—Duct joint	XP	4
4	6-14270-9	Duct Assembly—Equalizer	XM	1
5	6-14309	Duct Assembly—Equalizer	XM	1
6	6-14343	Duct Assembly—Equalizer	XM	1
7	6-14344	Elbow Assembly—Equalizer	XM	1
	9-7264	Installation—Radio compartment outlet	XM	NP
8	9-7264-1	Outlet Assembly	XM	1
9	15-17138-15	Clamp Assembly—Duct joint	XM	1
	15-13208	Installation—Heat and vent duct	XM	NP
10	9-7374	Elbow Assembly—Heat and vent	XM	1
11	15-17138-15	Clamp Assembly—Duct joint	XP	1
12	6-16277	Transition Assembly—Heat and vent	XM	1

RESTRICTED
PUBLISHED BY AVIALOGS.COM

FUSELAGE

Aft Fuselage Heating and De-icing System

Figure & Index No.	Part Number	1 2 3 4 5 6 7 Nomenclature	Usage Code	Units Per Assy.
141–13	15-17138-12	Clamp Assembly—Duct joint	XP	3
14	6-16276	Elbow Assembly—Heat and vent	XM	1
15	9-7375-9	Duct Assembly—Heat and vent	CO	1
16	9-7375-14	Duct Assembly—Heat and vent	CO	1
	15-16185	Installation—Heat and vent duct	PM	NP
17	15-16185-11	Duct Assembly	PM	1
18	15-16185-1	Transition Assembly	PM	1
19	6-16339	Elbow Assembly—Heat and vent	PM	1
20	15-16185-2	Duct Assembly	PM	1
21	6-16346	Transition Assembly—Heat and vent	PM	1
22	15-16185-7	Transition Assembly	PM	1
23	9-6715	Elbow Assembly—Heat and vent	PM	1
24	6-16340	Duct Assembly—RH waist gun	PM	1
25	3-24636	Duct Assembly—RH waist gun	PM	1
26	6-16341	Duct Assembly—RH waist gun	PM	1
27	14-3695	Defroster Assembly—RH waist gun	PM	1
28	15-17138-12	Clamp Assembly—Duct joint	XP	1
	15-13083	Installation—Heat and vent duct	CO	NP
29	6-16342-6	Transition Assembly—Heat and vent	CO	1
30	15-17138-6	Clamp Assembly—Duct joint	XP	3
31	6-16339	Elbow Assembly—Heat and vent	CO	1
32	6-16350-10	Duct Assembly—Heat and vent	CO	1
33	6-16355-5	Transition Assembly—Heat and vent	BO	1
34	9-7945	Duct Assembly—Heat and vent	BO	1
35	15-13083-2	Duct Assembly—Weld	HO	1
36	15-17138-2	Clamp Assembly—Duct joint	XP	2
37	6-18201	Duct Assembly—Heat and vent	CO	1
38	6-16341	Duct Assembly—RH waist gun	CO	1
39	15-17138-1	Clamp Assembly—Duct joint	XP	1
40	14-3695	Defroster Assembly—RH waist gun	CO	1
41	15-17138-14	Clamp Assembly—Duct joint	XP	1
	14-3655	Installation—Heat and vent duct	XM	NP
42	3-24613	Transition Assembly—Heat and vent	PM	1
43	3-27014	Transition Assembly—Heat and vent	CO	1
44	15-17138-14	Clamp Assembly—Duct joints	XP	1
45	9-7358	Duct Assembly—Heat and vent	QM	1
	9-7358-6	Duct Assembly—Heat and vent	HO	1
46	15-17138-2	Clamp Assembly—Duct joint	XP	2
47	6-16332	Elbow Assembly—Heat and vent	XM	1
48	3-24612	Transition Assembly—Heat and vent	XM	1
49	15-17138	Clamp Assembly—Duct joint	XP	1
50	14-3694	Defroster Assembly—LH waist gun	XM	1
51	15-17138-7	Clamp Assembly—Duct joint	XP	1
52	3-24611	Transition Assembly—Heat and vent	XM	1
53	15-17138-10	Clamp Assembly—Duct joint	XP	3
54	6-16331	Elbow Assembly—Heat and vent	XM	1
55	6-14255	Duct Assembly—Heat and vent	XM	1
56	6-14256	Duct Assembly—Heat and vent	XM	1
57	15-17138-10	Clamp Assembly—Duct joint	XP	1
	15-12712	Installation—Heat and vent duct	XM	NP
58	6-14275	Duct Assembly—Heat and vent	XM	1
59	15-17138-10	Clamp Assembly—Duct joint	XP	9
60	6-15265	Duct Assembly—Heat and vent	XM	1
61	6-15274	Transition Assembly—Heat and vent	XM	1
62	6-15279	Duct Assembly—Heat and vent	XM	1
63	6-14276	Elbow Assembly—Heat and vent	XM	1
64	6-14498	Duct Assembly—Heat and vent	XM	1
65	3-23111	Elbow Assembly—Heat and vent	XM	1
66	6-14489	Duct Assembly—Heat and vent	XM	1
67	8-2785	Duct Assembly—Damper	XM	1
68	6-14488	Tee Assembly—Heat and vent	XM	1
69	15-17138-3	Clamp Assembly—Duct joint	XP	8
70	6-14253	Elbow Assembly—Heat and vent	XM	1
71	6-14232	Duct Assembly—Heat and vent	XM	1
72	6-14253-7	Elbow Assembly—Heat and vent	XM	1
73	3-23094	Elbow Assembly—Heat and vent	XM	1
74	6-15273-1	Transition Assembly—Heat and vent	XM	1
75	6-15273	Transition Assembly—Heat and vent	XM	1
76	3-23087	Duct Assembly—Heat and vent	XM	1
77	3-23087-1	Duct Assembly—Heat and vent	XM	1
	15-9004	Installation—Tail turret defroster	LM	NP
78	6-14301	Elbow Assembly—Defroster	XM	1
79	6-14301-1	Elbow Assembly—Defroster	XM	1
80	3-15173	Duct Assembly—Defroster	XM	2
81	3-19542	Duct Assembly—Defroster	XM	1
82	3-19542-1	Duct Assembly—Defroster	XM	1
83	14-3288	Duct Assembly—Defroster	XM	1
84	14-3288-1	Duct Assembly—Defroster	XM	1
85	14-3289	Duct Assembly—Defroster	XM	1
86	14-3289-1	Duct Assembly—Defroster	XM	1
87	6-10795	Elbow Assembly—Defroster	XM	1
88	6-10795-1	Elbow Assembly—Defroster	XM	1
89	9-4648	Defroster Assembly—Rear gunner	XM	1

PUBLISHED BY AVIALOGS.COM

FUSELAGE

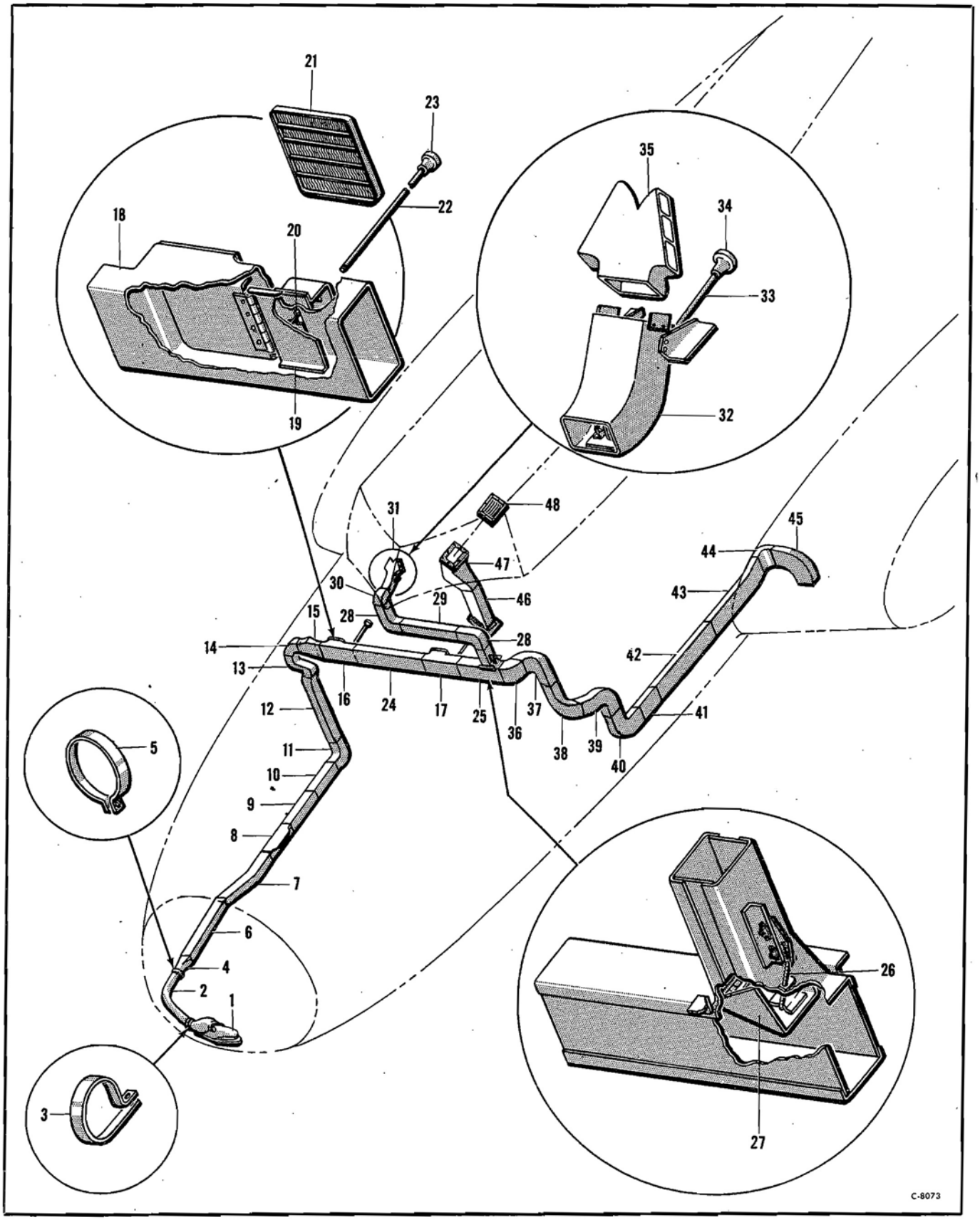

Figure 142—Fuselage Forward Heating and Ventilating System

PUBLISHED BY AVIALOGS.COM

FUSELAGE

Forward Fuselage Heating and Ventilating System

Figure & Index No.	Part Number	1 2 3 4 5 6 7 Nomenclature	Usage Code	Units Per Assy.
		Forward Fuselage Heating and Ventilating System		
	55-7368	Installation—Heating and ventilating	QB	NP
	14-3630	Installation—Bombers window defroster	QB	NP
	14-3630-1	Duct Assembly—Bombers window defroster	J	1
142-1	14-3630-4	Duct Assembly—Bombers window defroster	LF	1
	14-3631	Installation—Bombers window duct	QB	NP
2	3-20651	Transition—Heating duct	QB	1
3	2980-40	Clamp—Hose (Tinnerman)	QB	1
4	3-20650	Hose Assembly—Air duct	QB	1
5	2981-40	Clamp—Hose (Tinnerman)	QB	1
	15-11412	Installation—Heating and ventilating duct	QB	NP
6	15-11412-6	Duct Assembly—Heating and ventilating	QB	1
7	15-11412-1	Duct Assembly—Heating and ventilating	QB	1
	6-13921	Installation—Navigators air outlet	QB	NP
8	6-13921-1	Duct Assembly—Navigators air	QB	1
	6-13916	Installation—Navigators duct	QB	NP
9	6-13916-1	Duct Assembly—Navigators	QB	1
	9-2951	Installation—Bomber duct	QB	NP
10	9-2951-7	Duct Assembly—Bomber	QB	1
11	9-2951-12	Duct Assembly—Bomber	QB	1
	3-13627	Installation—Bomber duct	QB	NP
12	3-13627-1	Duct Assembly—Bomber	QB	1
	6-7887	Installation—Heating and ventilating duct	QB	NP
13	3-11477	Duct Assembly—Heating and ventilating	QB	1
14	51-255	Elbow Assembly—Air duct	QB	1
	3-12018	Installation—Heating and ventilating duct	QB	NP
15	3-12018-1	Duct Assembly—Heating and ventilating	QB	1
	55-5924	Installation—Pilots air duct	QB	NP
16	46-7622-1	Elbow Assembly—Pilots air duct	QB	1
17	46-7622	Elbow Assembly—Pilots air duct	QB	1
18	46-7622-3	Duct Assembly (used on 46-7622-1)	QB	1
	46-7622-2	Duct Assembly (used on 46-7622)	QB	1
	46-7622-403	Shutter Assembly	QB	1
19	41-7982	Shutter Assembly—Pilots air duct	QB	1
20	1-18371	Rod—Shutter control	QB	1
21	41-7983	Grill—Pilots air duct	QB	1
22	1-19701-1	Rod—Pilots heat control (used with 46-7622-1)	BA	1
	1-19701	Rod—Pilots heat control (used with 46-7622)	BA	1
	1-19701-3	Rod—Pilots heat control (used with 46-7622-1)	AH	1
	1-19701-2	Rod—Pilots heat control (used with 46-7622)	AH	1
	1-19701-5	Rod—Pilots heat control (used with 46-7622-1)	EL	1
	1-19701-2	Rod—Pilots heat control (used with 46-7622)	EL	1
23	1-18579	Knob—Plastic	QB	2
24	41-7952-1	Duct—Heating and ventilating	QB	1
25	46-7624	Elbow Assembly—Air duct	QB	1
	46-7624-1	Duct Assembly—Air duct	QB	1
26	41-7985	Rod—Shutter control	QB	1
	46-7624-404	Duct Assembly—Spot weld	QB	1
27	41-7979	Shutter Assembly—Defroster	QB	1
	9-3714	Installation—Defroster air duct	QB	NP
28	41-8385	Elbow Assembly	QB	2
29	41-7952-7	Duct	QB	1
30	41-8395	Elbow Assembly—Defroster duct	QB	1
	6-10474	Installation—Pilots defroster	QB	NP
31	6-10474-2	Duct Assembly—Pilots defroster	QB	1
	6-9481-12	Elbow Assembly	QB	1
32	6-9481-9	Elbow Assembly	QB	1
33	1-19655-1	Rod—Defroster control	QB	1
34	1-18579	Knob—Plastic	QB	1
35	6-10430	Defroster—Pilots outlet	QB	1
	6-7799	Installation—Heating and ventilating duct	QB	NP
36	3-11388-5	Duct Assembly—Heating and ventilating	QB	1
37	3-11388	Duct Assembly—Heating and ventilating	QB	1
38	3-11410	Duct Assembly—Heating and ventilating	QB	1
39	3-11424	Duct Assembly—Heating and ventilating	QB	1
	15-7384	Installation—Heating duct	QB	NP
40	3-11425	Duct Assembly—Heat and vent	QB	1
41	3-11426	Duct Assembly—Heat and vent	QB	1
42	15-7384-20	Duct Assembly	QB	1
43	15-7384-13	Duct Assembly	QB	1
44	15-7384-8	Elbow Assembly	QB	1
45	15-7384-1	Elbow Assembly	QB	1
	9-3084	Installation—Pilots air vent	QB	NP
46	3-11413	Duct Assembly—Air vent	QB	1
47	6-8152	Transition Assembly—Pilots air vent	QB	1
48	51-150	Grill—Pilots air vent	QB	1

PUBLISHED BY AVIALOGS.COM

FUSELAGE

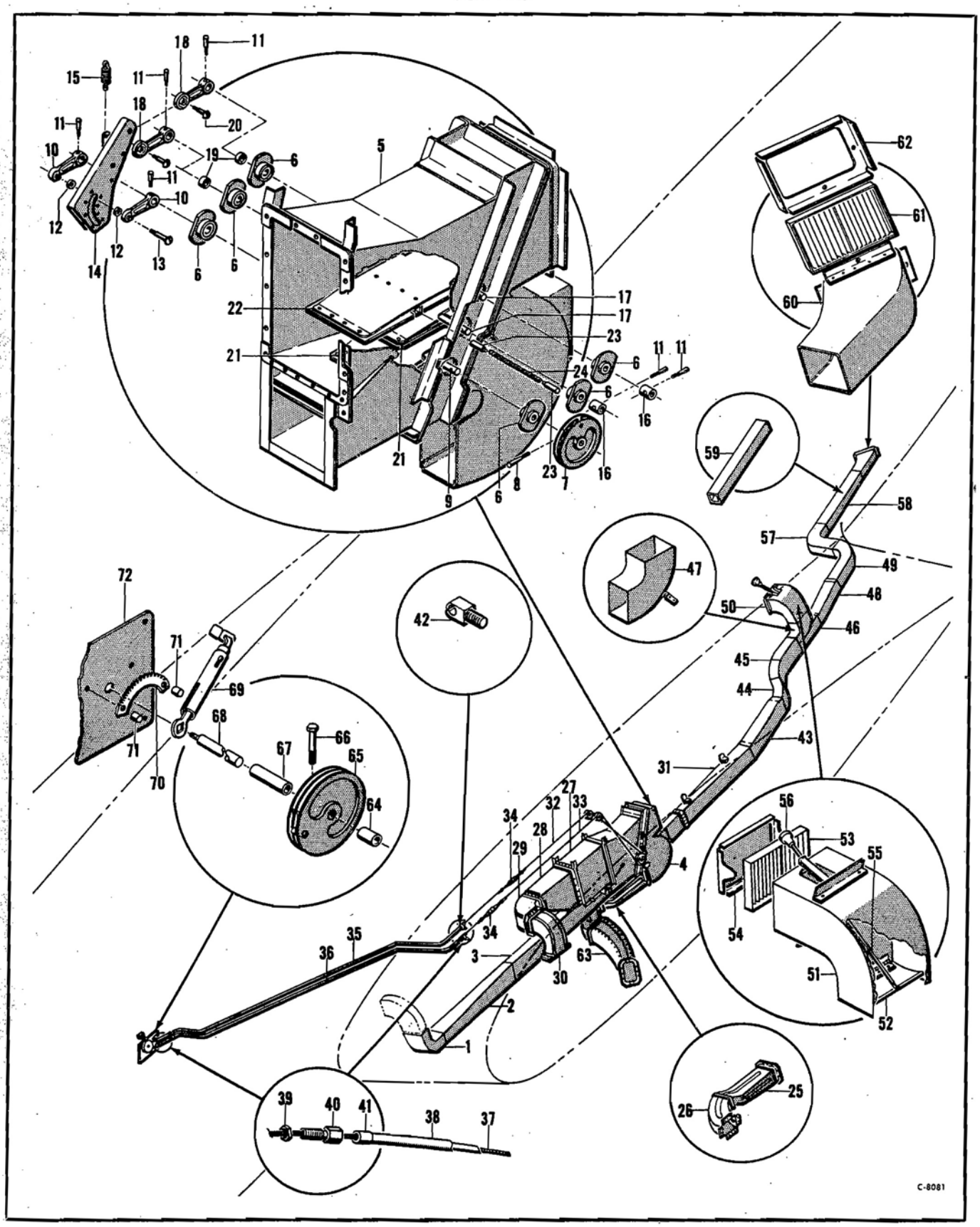

Figure 143—Aft Fuselage Heating and Ventilating System

PUBLISHED BY AVIALOGS.COM

FUSELAGE

Aft Fuselage Heating and Ventilating System

Figure & Index No.	Part Number	1 2 3 4 5 6 7 Nomenclature	Usage Code	Units Per Assy.
		Aft Fuselage Heating and Ventilating System		
	55-7368	Installation—Heating and ventilating	QB	NP
	65-6705	Installation—Cabin heating unit and cable	QB	NP
143-1	3-12577	Elbow Assembly—Heating	QB	1
2	3-12576	Transition Assembly—Heating	QB	1
3	6-8659	Duct Assembly—Heating and ventilating	QB	1
4	55-6704	Unit Assembly—Cabin air control	QB	1
5	55-6704-400	Duct Assembly—Cabin air control	QB	1
	55-6704-402	Control Assembly—Cabin air control	QB	1
6	1-16656	Housing Assembly—Bearing	EA	6
	1-16656-1	Housing—Bearing	EA	1
	AN201K8A	Bearing—Metal shielded ball	EA	1
	1-29922	Bearing—Phenolic	OH	6
7	3-13923	Drum—3-4 cable	QB	1
8	AN386-1-9	Pin—Threaded taper	QB	1
9	1-16668-7-24	Shaft—1-2 OD aluminum alloy	QB	1
10	1-22651	Lever—Damper control	QB	2
11	AN386-1-6	Pin—Threaded taper	QB	6
	AN975-3	Washer—Taper pin	QB	7
12	BAC1603-10	Spacer—1-8 in. long	QB	2
13	AN23-21	Bolt—Clevis	QB	1
14	6-8655	Link Assembly—Control arm	QB	1
15	41-4931	Spring—Tension	QB	1
16	1-16669	Collar—Valve shaft	QB	2
17	1-16668-6-29	Shaft—1-2 OD aluminum	QB	2
18	41-4069	Arm Assembly—Damper valve control	QB	2
19	BAC1608-21	Spacer	QB	2
	21-3894-24-13	Washer	QB	4
20	AN23-12	Bolt—Clevis	QB	2
21	3-12574	Vane Assembly—Cabin air control	QB	2
22	7-1655	Vane Assembly—Cabin air control	QB	1
23	1-21953	Block—Laminated phenolic	QB	2
24	1-21955	Spring—Brake	QB	1
	15-6703	Duct Assembly—Cold air	QB	1
25	15-6703-1	Duct Assembly—Cold air	QB	1
26	15-6703-10	Duct Assembly—Cold air	QB	1
27	1928E	Radiator Assembly (McQuay)	QB	1
28	9-3269	Duct Assembly—Cabin air	QB	1
29	6-8657	Elbow Assembly—Cabin air duct	QB	1
30	9-3267	Elbow Assembly—Cabin air	QB	1
31	6-8658	Duct Assembly—Heating and ventilating	QB	1
32	BAC1807-49-3R	Cable Assembly	QB	1
33	BAC1807-58-0R	Cable Assembly	QB	1
34	AN155-6L	Barrel—Turnbuckle	QB	2
35	55-6705-403	Control Assembly—Cabin heating	QB	1
36	55-6705-400	Control Assembly—Cabin heating	QB	1
37	BAC1807-120-0L	Cable Assembly (used on 55-6705-403)	QB	1
	BAC1807-108-0L	Cable Assembly (used on 55-6705-400)	QB	1
38	55-6705-401	Tube—Cabin heating	QB	1
39	AN316-4R	Nut—Aircraft check	QB	2
40	AN8005-1	Stop—Control cable	QB	2
41	AN8004-1	Cap—Control cable	QB	2
42	41-9163	Post—3-32 flexible cable casing	QB	4
	55-7599	Installation—Heating duct	QB	NP
43	55-7599-1	Duct Assembly—Heating	QB	1
44	55-7599-6	Elbow Assembly—Heating	QB	1
45	55-7599-400	Elbow Assembly—Heating	QB	1
46	9-3688	Elbow Assembly—Air duct	CB	1
47	9-9156	Elbow Assembly—Air duct	EL	1
48	3-11330	Duct Assembly—Gunners air	CB	1
49	55-7599-402	Elbow Assembly—Heating	CB	1
	9-3661	Installation—Air outlet elbow	QB	NP
50	9-3661-1	Elbow Assembly—Air outlet	QB	1
51	9-3661-11	Duct Assembly—Air outlet	QB	1
52	3-13934	Damper Assembly—Air duct	QB	1
53	1-19055	Grille—Air outlet	QB	1
54	1-19054	Cover—Grille	QB	1
55	1-20038	Rod—Air control	QB	1
56	1-20040	Knob—Plastic	QB	1
	14-2056	Installation—Heating duct	CB	NP
57	14-2056-21	Elbow Assembly—Heating	CB	1
58	14-2056-14	Duct Assembly—Heating	OA	1
59	14-2056-23	Duct Assembly—Heating	UI	1
60	14-2056-20	Elbow Assembly—Heating	OA	1
61	1-18245	Grille—Air outlet	OA	1
62	1-18244	Cover—Grille	QB	1
63	15-6702	Duct Assembly—Cold air	QB	1
	9-3705	Installation—Cabin air control	QB	NP
64	BAC1608-57	Spacer	QB	1
65	3-13923	Drum—3-32 cable	QB	1
66	AN3-14A	Bolt—Aircraft	QB	1
	AN365-1032	Nut—Self-locking	QB	1
67	BAC1608-119	Spacer	QB	1
68	1-18844	Shaft—1-2 OD	QB	1
69	41-8065	Handle Assembly—Damper control	QB	1
	AN960D416	Washer—Plain	QB	1
	AN365-428	Nut—Self-locking	QB	1
70	41-8064	Sector—Control lever	QB	1
71	BAC1603-30	Spacer	QB	2
72	3-13910	Name Plate	QB	1
	85-6691	Installation—Glycol system (see fig. 54)	QB	NP

PUBLISHED BY AVIALOGS.COM

FUSELAGE

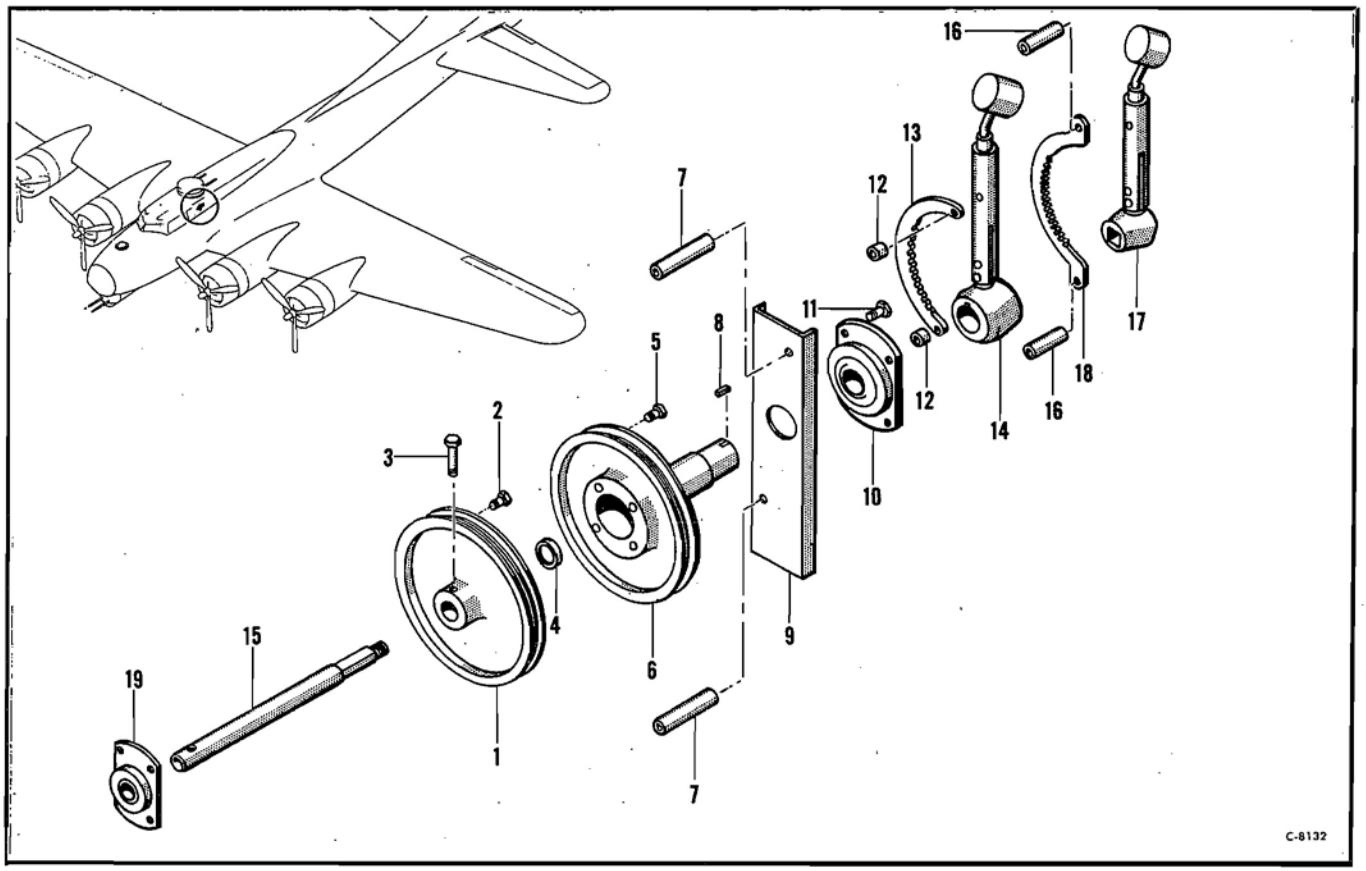

Figure 144—Cabin Heat Stand

Cabin Heat Stand

Figure & Index No.	Part Number	1 2 3 4 5 6 7 Nomenclature	Usage Code	Units Per Assy.
		Cabin Heat Stand		
	15-13013	Installation—Cabin heat stand (see fig. 69)	XM	NP
	15-13013-3	Drum Assembly	XM	1
144-1	6-14364	Drum—Cabin heat control	XM	1
2	AN3-6	Bolt—Aircraft	XM	1
3	AN3-13A	Bolt—Aircraft	XM	1
4	BAC1608-17	Spacer	XM	1
	15-13013-2	Drum Assembly	XM	1
5	AN3-6	Bolt—Aircraft	XM	1
6	6-14397	Shaft Assembly—Cabin heat control	XM	1
	3-23419	Drum Assembly—Cabin heat control	XM	1
	AN201K8A	Bearing—Ball	XM	1
7	BAC1603-136	Spacer	XM	2
8	BAC1002-6	Key—5-32 square	XM	1
9	15-13013-1	Channel	XM	1
10	3-22475	Housing Assembly—Bearing	XM	1
	AN201K12A	Bearing—Ball	XM	1
11	AN3-4A	Bolt—Aircraft	XM	4
12	BAC1603-32	Spacer	XM	2
13	3-23417	Sector—Cabin heat control unit	XM	1
14	3-22495	Lever Assembly—Cabin heat control	XM	1
	AN201K8A	Bearing—Ball	XM	1
15	3-23825	Shaft—Cabin heat control	XM	1
16	BAC1603-84	Spacer	XM	2
17	3-23801	Lever Assembly—Cabin heat control	XM	1
18	3-22479	Sector—Cabin heat control unit	XM	1
	15-13012	Installation—Support cabin heat (see fig. 69)	XM	NP
	15-13012-2	Support Assembly	XM	1
19	41-2476	Housing Assembly—Bearing	XM	1
	41-2476-3	Housing	XM	1
	AN201K8A	Bearing—Ball	XM	1

PUBLISHED BY AVIALOGS.COM

FUSELAGE

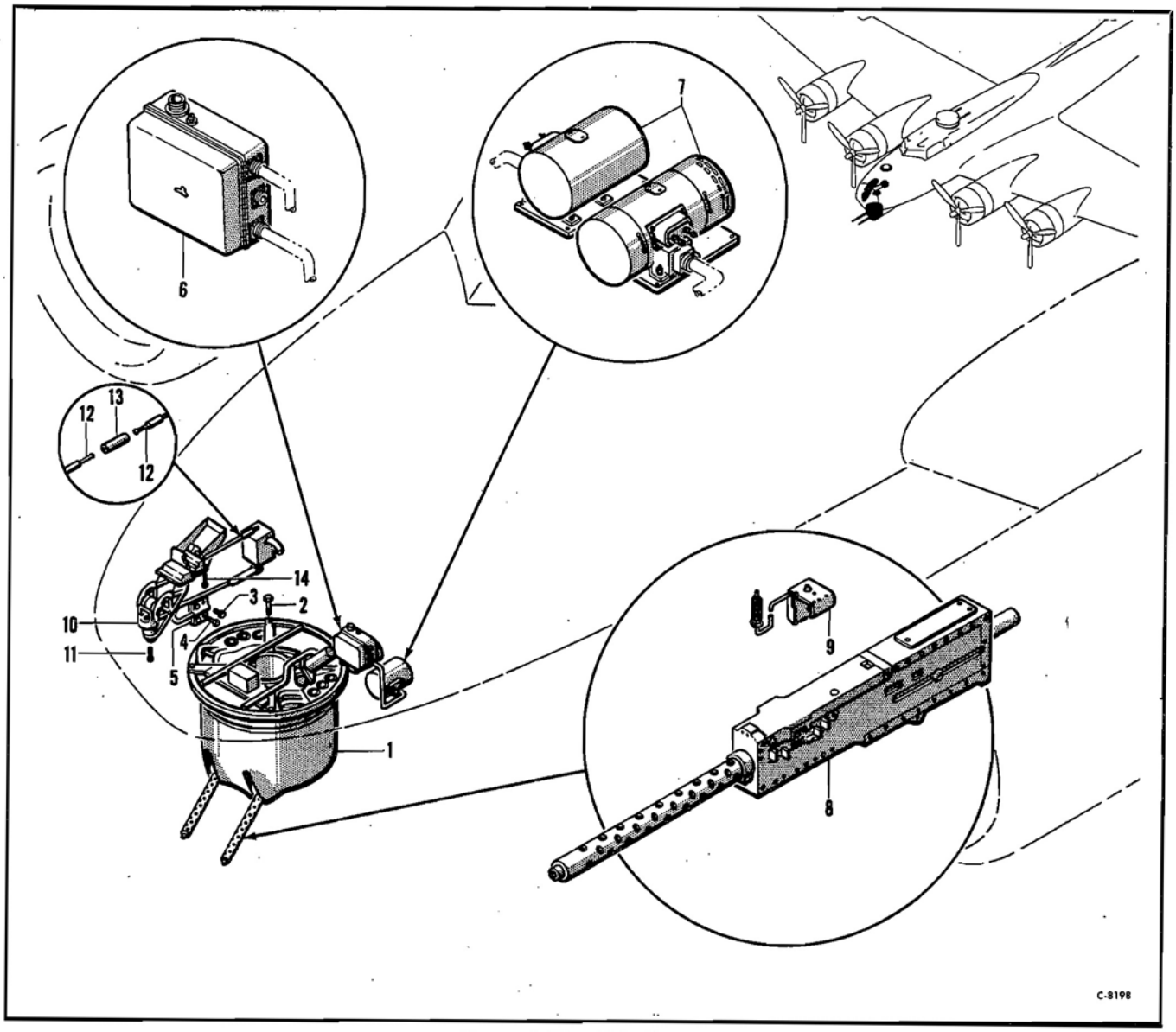

Figure 145—Chin Turret

Chin Turret

Figure & Index No.	*Part Number*	*1 2 3 4 5 6 7 Nomenclature*	*Usage Code*	*Units Per Assy.*
	15-11382	Installation—Chin turret	All	NP
145-1	82500	Turret Assembly—Chin (Bendix) GFE (T.O. 11-45AA-3)	JD	1
	83400	Turret Assembly—Chin (Bendix) (Type A-16A) GFE (T.O. 11-45AA-3)	DR	1
2	AN6-13A	Bolt—Aircraft	All	4
	AN960D16	Washer—Plain	All	4
	AN365-624	Nut—Self-locking	All	4
3	AN4-16A	Bolt—Aircraft	All	2
4	AN4-17A	Bolt—Aircraft	All	2
	AN960-416	Washer—Plain	All	2
	AN960-416L	Washer—Plain	All	2
5	3-24592	Spacer—Controller support	All	1
6	82822	Box—Resistor (Bendix) GFE (on 82500 and 83400)	All	NP
7	81174	Amplidyne (Bendix) GFE (on 82500 and 83400)	All	NP
8	M2	Gun—50 caliber machine GFE (see T.O. 11-1-8)	All	2
9	44B25259	Heater Assembly—Electric gun (Spec 24946) (Type J-4) GFE	All	2
10	659060	Sight (Sperry) (Type K-13) GFE (see T.O. AN 11-35A-17)	DR	1
11	AN500-10-10	Screw—Fillister head	DR	3
12	A50	Tip—Sta-Kon disconnect (Thomas and Betts)	All	2
13	NO. 7	Coupler—Sta-Kon disconnect (Thomas and Betts)	All	1
14	3-20722	Bolt—1-4 28 special	All	1
	AN316-4R	Nut—Aircraft check	All	4

PUBLISHED BY AVIALOGS.COM

FUSELAGE

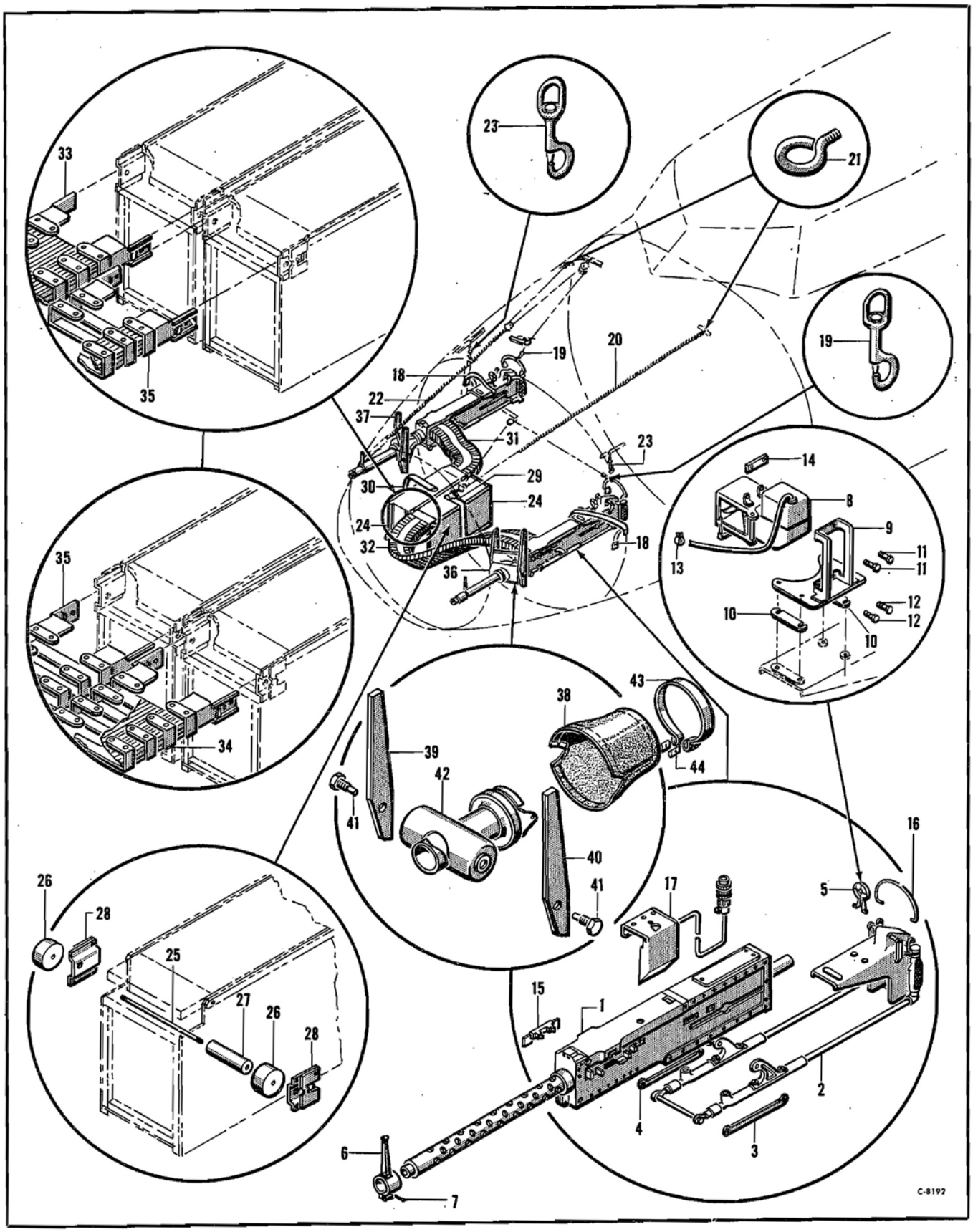

Figure 146—Cheek Guns and Equipment

RESTRICTED
PUBLISHED BY AVIALOGS.COM

FUSELAGE

Cheek Guns and Equipment

Figure & Index No.	Part Number	1 2 3 4 5 6 7 Nomenclature	Usage Code	Units Per Assy.
		Cheek Guns and Equipment		
	15-13870	Installation—Cheek gun 50 caliber LH	JI	NP
	15-13878	Installation—Cheek gun 50 caliber RH	JI	NP
146-1	M2	Gun—50 caliber machine GFE (see T.O. 11-1-8)	JI	1
2	NO NUMBER	Adapter—Gun mount (Type E-11) GFE	JI	1
3	43A10876	Link GFE	JI	1
4	43A10877	Link GFE	JI	1
5	42B8318	Sight—Gun ring (Type E-11) GFE	EI	1
	AN500-10-5	Screw—Fillister head	EI	2
6	42A8317	Sight Assembly—Gun post (Type A-11) GFE	EI	1
7	AN3-12	Bolt—Aircraft	EI	2
	AN310-3	Nut—Aircraft castle	EI	2
	9-9897-1	Installation—Reflector sight (used on 15-13870)	JP	NP
	9-9897	Installation—Reflector sight (used on 15-13878)	JP	NP
	9-9897-3	Sight Assembly—LH	JP	1
	9-9897-2	Sight Assembly—RH	JP	1
8	44B12175	Sight Assembly—Gun (Type N-8A) GFE (see AN11-35-91)	JP	1
9	6-20680	Bracket Assembly—Sight support	JP	1
10	3-31181	Shim—Reflector sight	JP	6
11	AN4-5A	Bolt—Aircraft	JP	2
12	AN4-6A	Bolt—Aircraft	JP	2
	AN364-428	Nut—Self-locking	JP	4
13	755-5-2-8	Clamp—Cushioned (Adel)	JP	1
14	3-32102	Spacer—Reflector sight	JP	2
	AN500-10R8	Screw—Fillister head	JP	4
15	43A6953R	Mount Assembly—Ammunition RH (used on 15-13870) (Type C-3A) GFE	JI	1
	43A6953L	Mount Assembly—Ammunition LH (used on 15-13878) (Type C-3A) GFE	JI	1
16	3-19996	Bail Assembly—Shock cord	WH	1
	3-19996-2	Bail Assembly—Shock cord	YL	1
17	NO NUMBER	Heater—Gun breech (used on 15-13870) (Spec 24864) (Type J-1 LH) GFE	JI	1
	NO NUMBER	Heater—Gun breech (used on 15-13878) (Spec 24864) (Type J-1 RH) GFE	JI	1
	6-20629	Installation—Cheek gun stowage support LH	JI	NP
	6-20677	Installation—Cheek gun stowage support RH	JI	NP
18	3-30187	Strap Assembly	JI	1
	AN520-10R12	Screw—Round head	JI	1
	15-13869	Installation—Cheek guns stabilizer	JI	NP
	15-13869-1	Stabilizer Assembly—LH gun	JI	1
	15-13869-2	Stabilizer Assembly—RH gun	JI	1
	15-13869-5	Cable Assembly (LH gun)	JI	1
	15-13869-11	Cable Assembly (RH gun)	JI	1
19	225	Snap—Halyard (North & Judd)	JI	1
20	3-26005	Spring—Tension (LH gun)	JI	1
21	3-26029	Bolt—Eye	JI	1
	15-13869-10	Bracket Assembly—Stabilizer (RH gun)	JI	1
22	3-26004	Spring—Tension	JI	1
	15-13869-7	Stowage Assembly—Nose gun	JI	2
23	225	Snap—Halyard (North & Judd)	JI	1
	15-13854	Installation—Cheek guns box	JI	NP
24	15-13853	Box Assembly—Cheek guns ammunition	JI	2
25	1-30403-1	Rod—Ammunition box roller	JI	1
	AN960-416	Washer—Plain	JI	4
26	3-26047	Roller—Ammunition box	JI	2
27	3-21396-1	Roller—Ammunition box	JI	1
28	3-20562	Support Assembly—Ammunition track	JI	2
	9-7557	Pan Assembly—Cheek guns	XH	1
	9-7557-2	Pan Assembly—Cheek guns	XM	1
29	3-26023	Strap Assembly—Ammunition box	JI	1
30	3-26023-1	Strap Assembly—Ammunition box	JI	1
	6-16971	Cover Assembly—Ammunition box	JI	2
31	6-16324-5	Chute Assembly—Flexible ammunition	XH	1
32	6-16324-6	Chute Assembly—Flexible ammunition	XH	1
33	6-16324-7	Chute Assembly—Flexible ammunition	OM	1
34	6-16324-9	Chute Assembly—Flexible ammunition	RN	1
35	6-16324-8	Chute Assembly—Flexible ammunition	XM	1
	LLB50G1	Adapter—Gun end (Smoot-Holman) GFE	JI	1
	LLB50M3	Adapter—Box end (Smoot-Holman) GFE	JI	1
	LLB50-34	Chute (Smoot-Holman) (used on 6-16324-5) GFE	JI	1
	LLB50-68	Chute (Smoot-Holman) (used on 6-16324-6) GFE	JI	1
	LLB50-80	Chute (Smoot-Holman) (used on 6-16324-7) GFE	JI	1
	LLB50-91	Chute (Smoot-Holman) (used on 6-16324-9) GFE	JI	1
	LLB50-46	Chute (Smoot-Holman) (used on 6-16324-8) GFE	JI	1
36	9-7545	Mount Assembly—Cheek gun (LH) (see fig. 65)	AL	Ref
37	9-7545-1	Mount Assembly—Cheek gun (RH) (see fig. 65)	AL	Ref
38	9-7525	Boot—K-5 gun mount	AL	1
39	6-16910	Support—Gun mount (LH)	LH	1
	6-16910-1	Support—Gun mount (RH)	AL	1
40	6-16910-2	Support—Gun mount (LH)	AL	1
	6-16910-3	Support—Gun mount (RH)	AL	1
41	3-26003	Bolt—5-8 18 special	AL	2
42	6-16899	Mount Assembly—K-5	AL	1
	43G10872	Mount—Gun (Type K-5) GFE	AL	1
43	3-25310	Clamp—K-5 mount boot	AL	1
	AN520-10R24	Screw—Round head	AL	1
44	1-27935-1	Spacer—Support strap	AL	2

PUBLISHED BY AVIALOGS.COM

FUSELAGE

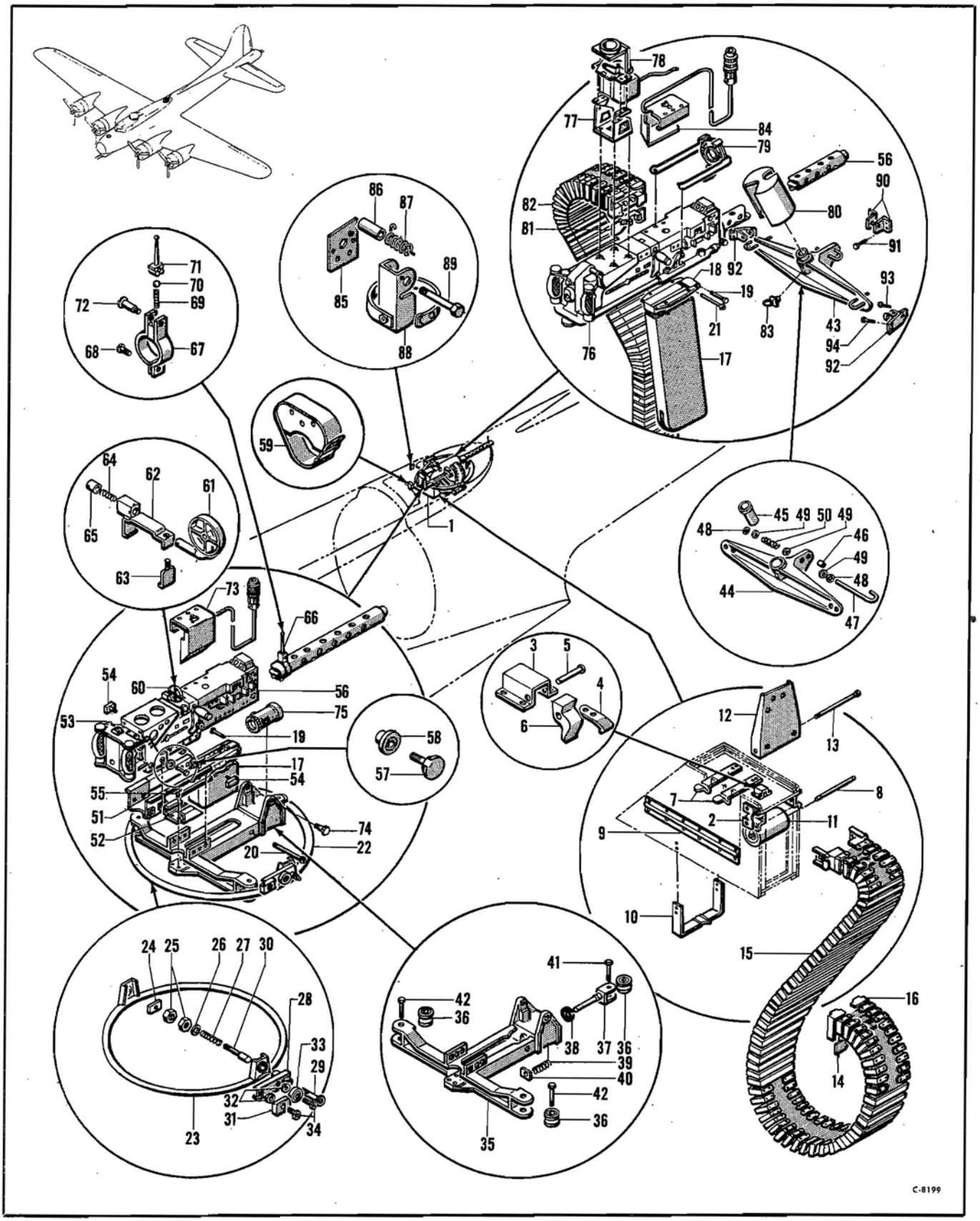

Figure 147—Radio Compartment Gun

RESTRICTED
PUBLISHED BY AVIALOGS.COM

FUSELAGE

Radio Compartment Gun

Figure & Index No.	Part Number	1 2 3 4 5 6 7 Nomenclature	Usage Code	Units Per Assy.
		Radio Compartment Gun		
	14-3290	Installation—Top gun ammunition box	DD	NP
147-1	14-3286	Box Assembly—Ammunition top gun	DD	1
2	3-20562	Support Assembly—Ammunition track	DD	2
	4-3286-10	Catch Assembly	DD	1
3	35A3896	Housing	DD	1
4	35A3898	Spring	DD	1
5	35A3899	Pin	DD	1
6	35A3897	Lever	DD	1
7	1-29960	Latch—Ammunition box	DD	2
8	1-28072-1	Rod—Roller ammunition box	DD	1
9	14-3286-35	Hinge (make from AN251-3)	DD	1
10	1-22707-18	Strap Assembly—3-4 wide (Spec AC6-185C) (Type 2B) (Sturges Mfg. Co.)	DD	1
11	3-13675	Roller Assembly—Ammunition box	DD	1
12	6-13193	Bracket—Ammunition box support	DD	1
13	1-28368	Bolt—3-16 stud	DD	1
14	43A6953R	Mount Assembly (Type C3A) GFE	AJ	1
15	6-16324	Chute Assembly—Flexible ammunition	WB	1
	LLB50-46	Chute (Smoot-Holman) GFE	WB	1
	LLB50G1	Adapter (Smoot-Holman) GFE	WB	1
	LLB50M3	Adapter (Smoot-Holman) GFE	WB	1
16	37B2675-1	Adapter (Type C2) GFE	OA	1
	15-10411	Installation—Upper gun	SD	NP
	15-16076	Installation—Radio compartment gun	PN	NP
17	6-15203	Container Assembly—Case ejection	SD & PN	1
18	6-19349	Adapter Assembly—Case container	PN	1
19	3-20848	Pin—Safety	SD & PN	1
20	3-21881	Pin Assembly—Ejection case	SD	1
21	3-21881-2	Pin Assembly—Ejection case	PN	1
22	15-10412	Mount Assembly—Upper gun	SD	1
	15-10412-2	Ring Assembly	SD	1
23	9-3379	Ring Assembly—Gun mount	SD	1
24	1-18145	Handle—Gun mount lock	SD	2
25	AN316-10R	Nut—Aircraft check	SD	4
26	1-18144	Spacer—Gun mount lock	SD	2
27	1-18160	Spring—Compression	SD	2
28	3-13379	Carriage Assembly—Gun mount	SD	2
29	1-18147	Spring—Retainer gun mount lock	SD	2
30	1-18146	Pin—Gun mount lock	SD	2
31	1-17014	Slide—Gun mount	SD	2
32	1-18143	Spacer—Carriage guide	SD	4
33	AN201K10A	Bearing—Ball	SD	2
34	1-18148	Pin—Gun mount carriage	SD	4
	15-10412-3	Support Assembly	SD	1
35	15-10409	Support Assembly—Gun mount	SD	1
	1-18338	Bushing—Gun mount	SD	1
	1-27745	Bushing—Gun mount	SD	1
36	1-18067	Roller Assembly—Gun ring	SD	3
	AN201K4A	Bearing—Ball	SD	2
	BAC1604-68	Spacer—1-4 bolt	SD	1
37	3-19280	Yoke Assembly—Gun mount	SD	1
38	1-18298-8	Buffer—Armor plate	SD	1
39	1-18065	Spring—Compression	SD	1
40	1-27185	Filler—Spring seat	SD	1
41	AN4-24	Bolt—Aircraft	SD	1
42	AN4-25	Bolt—Aircraft	SD	2
43	9-8973	Mount Assembly—Radio compartment gun	PN	1
44	15-15486	Mount—Radio compartment gun	PN	1
45	3-28769	Bushing—Gun mount	PN	1
46	3-28769-1	Bushing—Gun mount	PN	3
47	3-28796	Pin—Gun mount	PN	3
48	NAS51-37	Ring—Retainer	PN	6
49	AN960-616	Washer—Plain	PN	9
50	3-28797	Spring—Compression	PN	3
51	6-13184	Frame Assembly—50 caliber gun	SD	1
52	DS6769	Slide—Box top gun (Edgewater Steel Co.)	SD	1
53	DS6764	Adapter—Handle frame (Edgewater Steel Co.)	SD	1
54	DS6351	Slide (Edgewater Steel Co.)	SD	2
55	AN3-10A	Bolt—Aircraft	SD	4
56	M2	Gun—50 caliber GFE	SD & PN	1
57	DS6357	Bolt—Frame mount (Edgewater Steel Co.)	SD	4
58	DS6356	Washer (Edgewater Steel Co.)	SD	4
59	3-19291	Bracket Assembly—Gun stowage	SD	1
	1-22707-18	Strap Assembly—3-4 wide (Spec AC6-185C) (Type 2B) (Sturges Mfg. Co.)	SD	1
60	3-19579	Sight Assembly—Folding ring	SD	1
61	3-19580	Ring Assembly—Gun sight	SD	1
62	1-16365	Clamp Assembly—Gun sight	SD	1
63	1-16366	Hook—Gun sight clamp	SD	1
64	1-16373	Spring—Compression	SD	1
65	1-16382	Sleeve—Spring retaining	SD	1
66	3-19578	Sight Assembly—Folding post	SD	1
67	3-19577	Clamp Assembly—Gun sight	SD	1
68	AN515-8-8	Screw—Round head	SD	1
69	1-27726	Spring—Compression	SD	1
70	3-19578-1	Ball—3-16 diameter	SD	1
71	1-27706	Post—Gun sight	SD	1
72	AN22-12	Bolt—Clevis	SD	1
73	15-10411-4	Heater—Gun breech (Spec 24864) (Type J4) GFE	SD	1
74	DS6355	Screw—Cap (Edgewater Steel Co.)	SD	2
75	41B2679	Adapter—Gun mount (Type E10) GFE	SD	1
76	NO NUMBER	Adapter Assembly (Type E11) GFE	PN	1
77	44D4853	Mount Assembly—Gun sight GFE	PN	1
78	44B12175	Sight Assembly—Gun (Type N8A) GFE	PN	1
79	42D19090	Adapter Assembly—Gun mount (Type C19) GFE	PN	1
80	44J11614	Mount Assembly—Gun (Type K6) GFE	PN	1
81	43A6953L	Mount—LH ammunition track (Type C3A) GFE	PN	1
82	6-16324-1	Chute Assembly—Flexible ammunition	PN	1
	LLB50-46	Chute (Smoot-Holman) GFE	PN	1
	LLB50G1	Adapter (Smoot-Holman) GFE	PN	1
	LLB50M3	Adapter (Smoot-Holman) GFE	PN	1
83	3-28805	Lock Assembly—Gun mount	PN	1

PUBLISHED BY AVIALOGS.COM

FUSELAGE

Radio Compartment Gun

Figure & Index No.	Part Number	1 2 3 4 5 6 7 Nomenclature	Usage Code	Units Per Assy.
	3-28806	Plunger—Gun mount lock	PN	1
	83-1	Ring—Key (Seattle Hardware Co.)	PN	1
147-84	44B25259	Heater Assembly (Type J4) GFE	MN	1
	NO NUMBER	Heater—Gun breech (Spec 24864) (Type J1)	AO	1
	55-6612	Installation—Top gun emplacement fairing (see fig. 67)	All	NP
	6-19359	Installation—Gun stowage latch	PN	NP
85	3-28869	Plate Assembly—Gun stowage	PN	1
86	3-28870	Spacer—Gun stowage latch	PN	1
87	3-28871	Spring—Torsion	PN	1
88	3-30111	Latch Assembly—Gun stowage	PN	1
	3-28868	Latch—Gun stowage	PN	1
89	AN4-21A	Bolt—Aircraft	PN	1
	15-16028	Installation—Gun mount fitting	PN	NP
90	3-28790	Fitting—Gun mount	PN	2
91	AN4-6A	Bolt—Aircraft	PN	4
92	9-8951	Fitting—Gun mount	PN	2
93	AN4-11A	Bolt—Aircraft	PN	2
94	AN4-14A	Bolt—Aircraft	PN	4

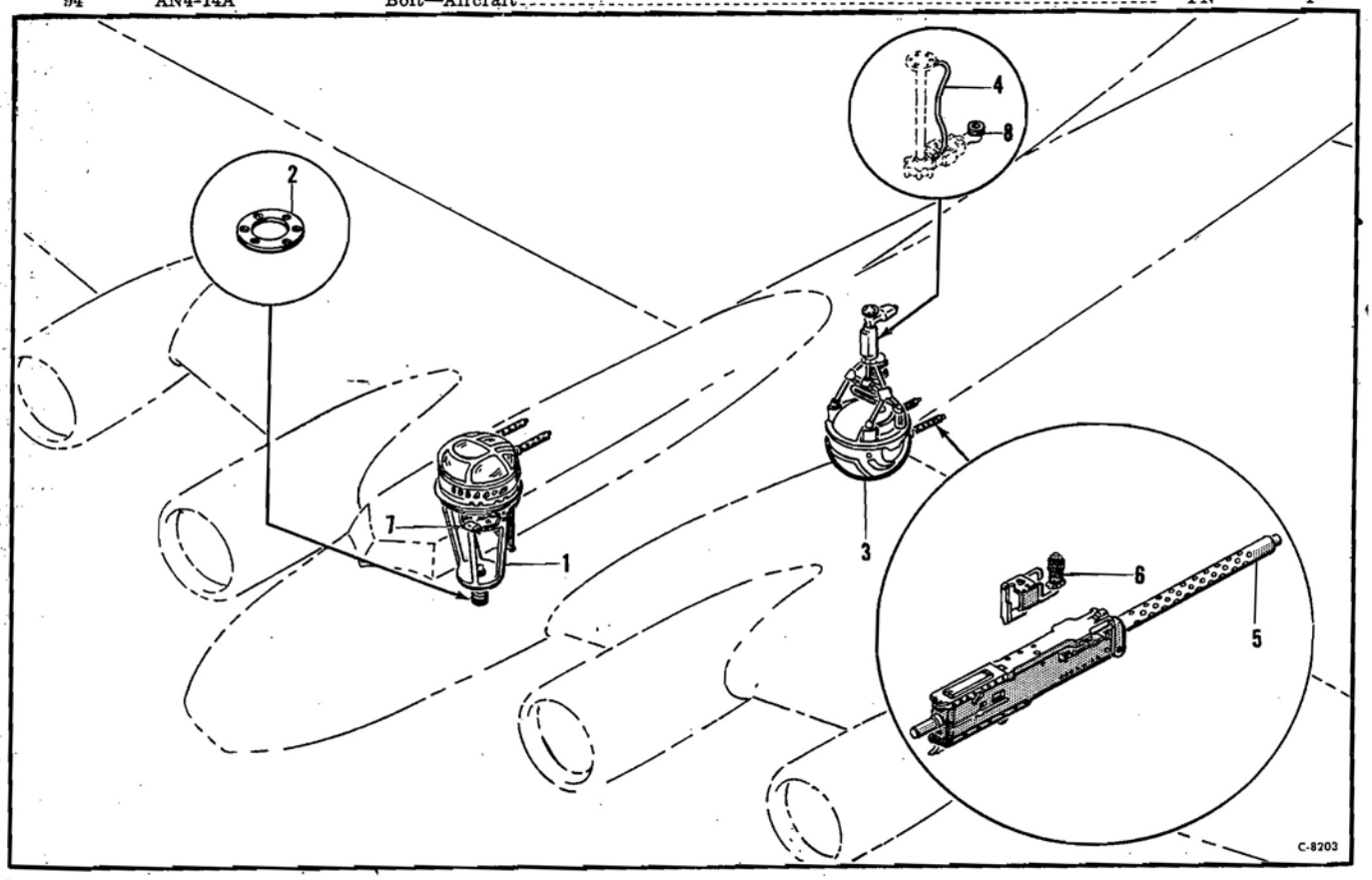

Figure 148—Power Turrets

Power Turrets

Figure & Index No.	Part Number	1 2 3 4 5 6 7 Nomenclature	Usage Code	Units Per Assy.
		Power Turrets		
	55-7521	Installation—Power turret	All	NP
148-1	SP2475	Turret Assembly—Upper (Type A1A) (Sperry) GFE	DC	1
	SP4720	Turret Assembly—Upper (Type A1B) (Sperry) GFE	OO	1
2	55-7521-11	Shim	All	AR
	55-7521-12	Shim	All	AR
	55-7521-13	Shim	All	AR
	55-7521-400	Shim	All	AR
3	645849J	Turret Assembly—Lower (Type A-2) (Sperry) GFE	U	1
	30126	Turret Assembly—Lower (Type A2A) (Sperry) GFE	OG	1
4	55-7521-410	Ground Assembly	OG	1
5	M2	Gun—50 caliber machine GFE	All	4
6	44B25259	Heater Assembly—Electric gun (lower turret) (Spec 24946) (Type J-4) GFE	ZE	2
	97-5103-12S35	Receptacle (American Phenolic Corp.)	MN	2
7	7545	Plug (Harvey Hubbell)	QE	1
8	066424	Nipple	IQ	1

PUBLISHED BY AVIALOGS.COM

FUSELAGE

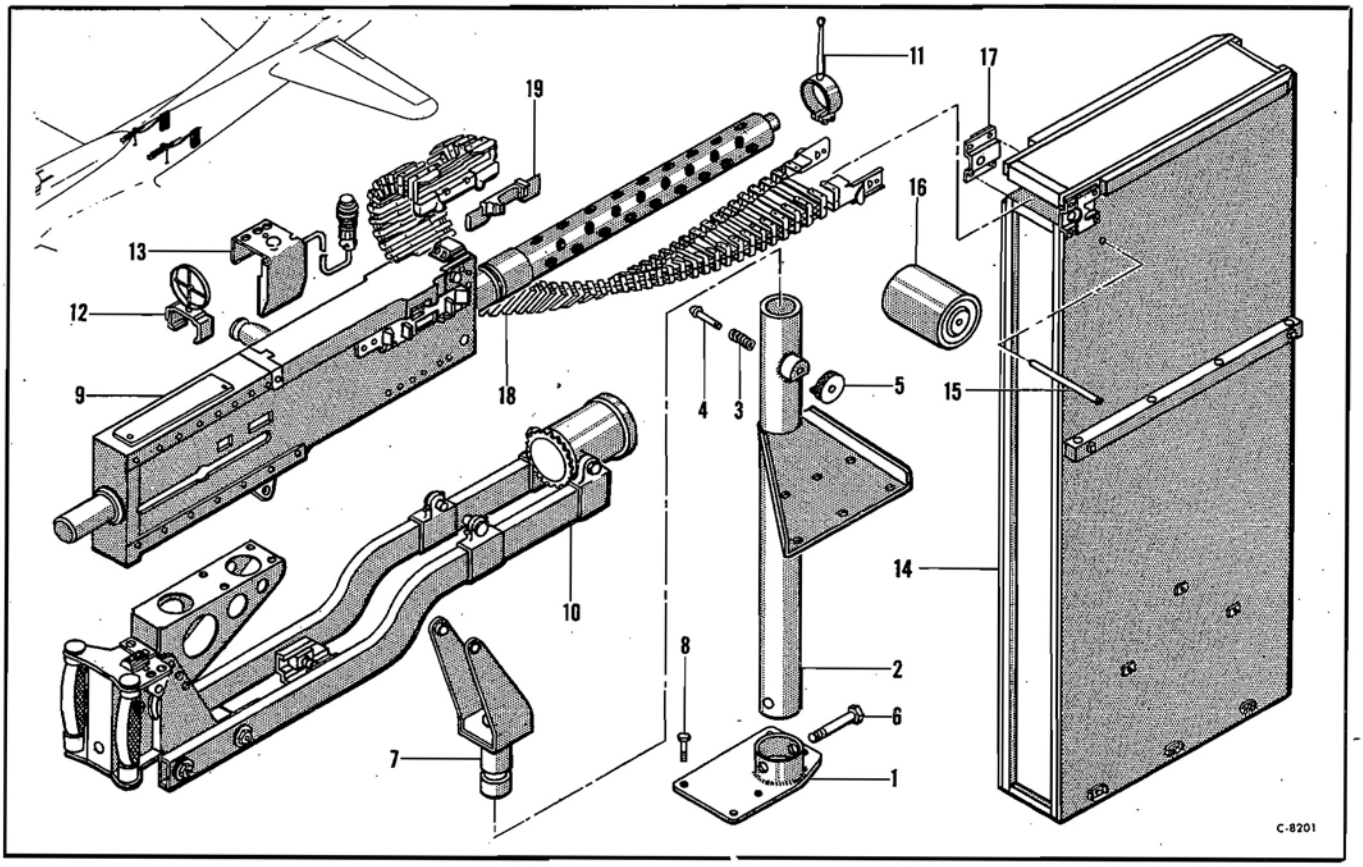

Figure 149—Waist Guns

Waist Guns

Figure & Index No.	Part Number	1 2 3 4 5 6 7 Nomenclature	Usage Code	Units Per Assy.
		Waist Guns		
	15-8785	Installation—Side gun (LH)	T	NP
	15-8785-1	Installation—Side gun (RH)	T	NP
	15-8785-5	Mount Assembly (LH)	T	1
	15-8785-6	Mount Assembly (RH)	T	1
149-1	1-22622	Base Assembly—Side gun mount LH	T	1
	1-22622-1	Base Assembly—Side gun mount RH	T	1
	6-10737	Post Assembly—Gun mount LH	T	1
	6-10737-1	Post Assembly—Gun mount RH	T	1
	6-10737-2	Post Assembly (LH)	T	1
2	6-10737-3	Post Assembly (RH)	T	1
3	1-22609	Spring—Gun mount	T	1
4	1-22610	Plunger—Gun mount	T	1
5	1-22613	Knob Assembly—Gun mount	T	1
6	NAS56A31	Bolt—Close tolerance	T	1
	AN365-624	Nut—Self-locking	T	1
7	6-10736	Yoke Assembly—Gun mount	T	1
	1-22621	Bushing—Gun mount	T	2
8	AN3-5A	Bolt—Aircraft	T	5
	AN365-1032	Nut—Self-locking	T	5
9	M2	Gun—50 caliber machine GFE (see T.O. 11-1-8)	T	1
10	41K3650	Adapter (Type E-8) GFE	T	1
11	37A5810	Sight (Type A-5) GFE	T	1
12	37A5811	Sight (Type B-11) GFE	T	1
13	NO NUMBER	Heater—Gun breech (LH) (Spec 24864) (Type J-1 RH) GFE	T	1
	NO NUMBER	Heater—Gun breech (RH) (Spec 24864) (Type J-1 LH) GFE	T	1
	15-10606	Installation—Side guns ammunition box	OA	NP
14	15-10605	Box Assembly—Side guns ammunition (LH)	J	1
	15-13098	Box Assembly—Side guns ammunition (LH)	KF	1
	15-10605-1	Box Assembly—Side guns ammunition (RH)	J	1
	15-13098-1	Box Assembly—Side guns ammunition (RH)	KF	1
15	1-28072	Rod—Roller ammunition box	J	1
	1-30403	Rod—Roller ammunition box	KF	1
16	3-13797	Roller Assembly—Ammunition box	OA	1
17	3-20562	Support Assembly—Ammunition track	OA	2
18	6-16324-1	Chute Assembly—Flexible ammunition	OA	2
	LLB50G1	Adapter—Gun end (Smoot-Holman) GFE	OA	1
	LLB50M3	Adapter—Box end (Smoot-Holman) GFE	OA	1
	LLB50-46	Chute (Smoot-Holman) GFE	OA	1
19	39B3905L	Adapter (Type C-3) GFE	OA	1
	39B3905R	Adapter (Type C-3) GFE	OA	1

PUBLISHED BY AVIALOGS.COM

FUSELAGE

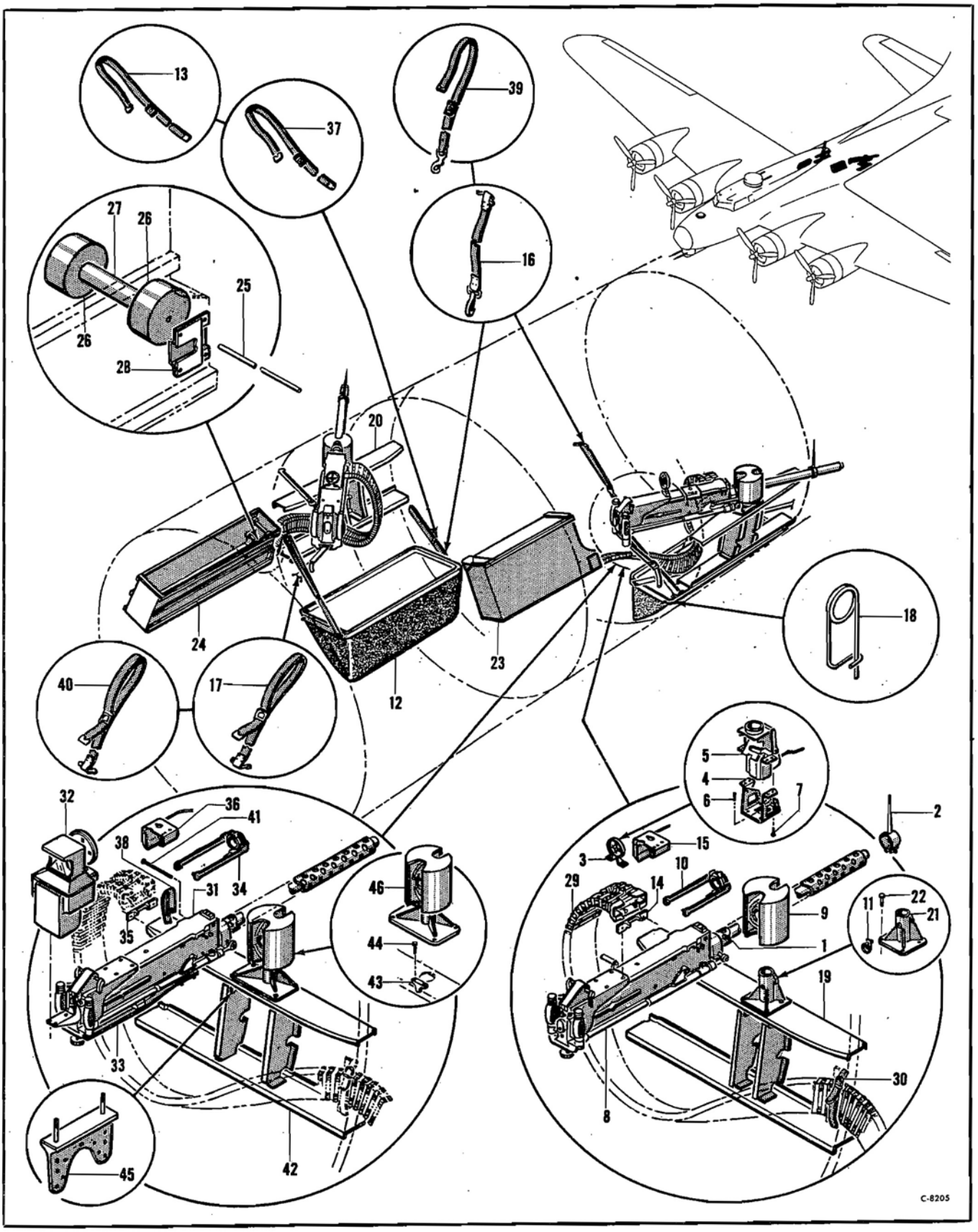

Figure 150—Waist Guns

RESTRICTED
PUBLISHED BY AVIALOGS.COM

FUSELAGE

Waist Guns

Figure & Index No.	Part Number	1 2 3 4 5 6 7 Nomenclature	Usage Code	Units Per Assy.
		Waist Guns		
	15-13954	Installation—50 caliber waist gun	JJ	NP
150-1	M2	Gun—50 caliber machine (see T.O. 11-1-8)	JJ	2
2	43B15240	Sight Assembly—Gun post (Type A-12) GFE	DJ	2
	AN500-10-20	Screw—Fillister head	DJ	4
3	42B8318	Sight—Gun ring (Type B-13)	DJ	2
	AN3-13A	Bolt—Aircraft	DJ	2
	3-27000-1	Spacer—Gun ring sight	DJ	2
4	44D4853	Mount Assembly—Gunsight (Type C-5) GFE	HO	2
5	44B12175	Sight Assembly—Gun (Type N-8A)	HO	2
6	AN500-10-10	Screw—Fillister head	HO	8
7	AN4-5A	Bolt—Aircraft	HO	8
8	NO NUMBER	Adapter Assembly (Type E-11) GFE	JJ	2
9	44J4367	Mount Assembly—Gun (Type K-6) GFE	AJ	2
	44J11614	Mount Assembly—Gun (Type K-6A) GFE	ON	2
	6-22010	Mount Assembly—Waist guns	QP	2
	44J1164	Mount Assembly (Type K-6A) GFE	QP	1
10	42D19090	Adapter Assembly—Gun mount (Type C-19) GFE	FJ	2
	44D25364	Adapter Assembly—Gun mount (Type C-19A) GFE	QP	2
11	3-26079	Lock Assembly—Gun mount	JJ	2
	AN515-10R4	Screw—Round head	JJ	2
12	15-13958	Container Assembly—Link and case	QK	2
13	3-26118	Strap Assembly—Web	QK	2
14	37B2675	Mount—Ammunition (LH) (Type C-2) GFE	TI	1
	43A6953L	Mount—Ammunition (LH) (Type C-3A) GFE	ZK	1
	37B2675-1	Mount—Ammunition (RH) (Type C-2) GFE	TI	1
	43A6953R	Mount—Ammunition (RH) (Type C-3A) GFE	ZK	1
15	NO NUMBER	Heater—Gun breech (Type J-1 LH) GFE	LJ	1
	NO NUMBER	Heater—Gun breech (Type J-1 RH) GFE	LJ	1
	44B25259	Heater Assembly (Type J-4) GFE	MN	2
16	3-27011	Strap Assembly—Gun stowage	JJ	2
17	3-27012	Strap Assembly—Gun stowage	JJ	2
	AN510-10R10	Screw—Flat head	JJ	8
18	3-20848	Pin—Safety retaining	JJ	4
	AN365-1032	Nut—Self-locking	JJ	2
19	9-6481-2	Support Assembly—Gun mount LH (see fig. 79)	JJ	Ref
20	9-6482-2	Support Assembly—Gun mount RH (see fig. 79)	JJ	Ref
21	6-17023	Support Assembly—Gun mount	JJ	1
22	AN5-10A	Bolt—Aircraft	JJ	4
	15-13247	Installation—Waist gun ammunition box LH	KJ	NP
	15-13248	Installation—Waist gun box RH	KJ	NP
23	15-13085	Box Assembly—Gun ammunition LH	KJ	1
24	15-13264	Box Assembly—Waist gun ammunition RH	KJ	1
25	1-30403-2	Rod—Ammunition box roller	KJ	2
26	3-21396	Roller—Ammunition box	KJ	4
27	3-21396-1	Roller—Ammunition box	KJ	2
28	3-20562	Support Assembly—Ammunition track	KJ	2
29	6-16324-4	Chute Assembly—Flexible ammunition (LH)	KJ	1
	6-16324-3	Chute Assembly—Flexible ammunition (RH)	KJ	1
	LLB50G1	Adapter—Gun end (Smoot-Holman) GFE	KJ	1
	LLB50M3	Adapter—Box end (Smoot-Holman) GFE	KJ	1
	LLB50-80	Chute—Flexible ammunition (LH) (Smoot-Holman) GFE	KJ	1
	LLB50-76	Chute—Flexible ammunition (RH) (Smoot-Holman) GFE	KJ	1
30	1-22707-28	Strap Assembly—3-4 wide	KJ	1
	15-18376	Installation—50 caliber waist gun	WQ	NP
31	M2	Gun—50 caliber machine GFE (see T.O. 11-1-8)	WQ	2
32	659060	Sight (Sperry) (Type K-13) GFE (see AN11-35A-17)	WQ	2
33	7-44-6631	Adapter Assembly (Type E-13) GFE	WQ	2
	3-32557	Screw—Number 10 special	WQ	2
	3-32557-1	Screw—Number 10 special	WQ	4
34	44D25364	Adapter Assembly—Gun mount (Type C19A) GFE	WQ	2
35	43A6953L	Mount—Ammunition (Type C-3A) (LH) GFE	WQ	1
	43A6953R	Mount—Ammunition (Type C-3A) (RH) GFE	WQ	1
36	44B25259	Heater Assembly (Type J-4) GFE	WQ	2
	15-13958	Container Assembly—Link and case	WQ	2
37	3-26118	Strap Assembly—Web	WQ	2
38	6-22681	Deflector—Flexible cable	WQ	2
39	6-22090	Strap Assembly—Gun stowage	WQ	2
40	3-27012	Strap Assembly—Gun stowage	WQ	1
	AN510-10R10	Screw—Flat head	WQ	2
41	3-34255	Bolt—9-16 special	WQ	2
42	12-1199-1	Mount Assembly—Waist gun LH (see fig. 79)	WQ	Ref
	12-1198-1	Mount Assembly—Waist gun RH (see fig. 79)	WQ	Ref
	9-10696	Beam Assembly—Waist gun LH	WQ	1
	9-10695	Beam Assembly—Waist gun RH	WQ	1
43	3-32815	Stop—K-7 gun mount	WQ	1
44	AN4-6A	Bolt—Aircraft	WQ	2
	6-22016	Web Assembly—Waist gun LH	WQ	1
	6-22015	Web Assembly—Waist gun RH	WQ	1
	6-22016-3	Web Assembly—Waist gun LH	WQ	1
	6-22015-3	Web Assembly—Waist gun RH	WQ	1
45	3-32824	Fitting Assembly—Gun mount support	WQ	1
	AN365-524	Nut—Self-locking	WQ	4
46	6-22114	Mount—Waist gun (make from mount assembly 659289 Type K-7 Sperry)	WQ	1

PUBLISHED BY AVIALOGS.COM

FUSELAGE

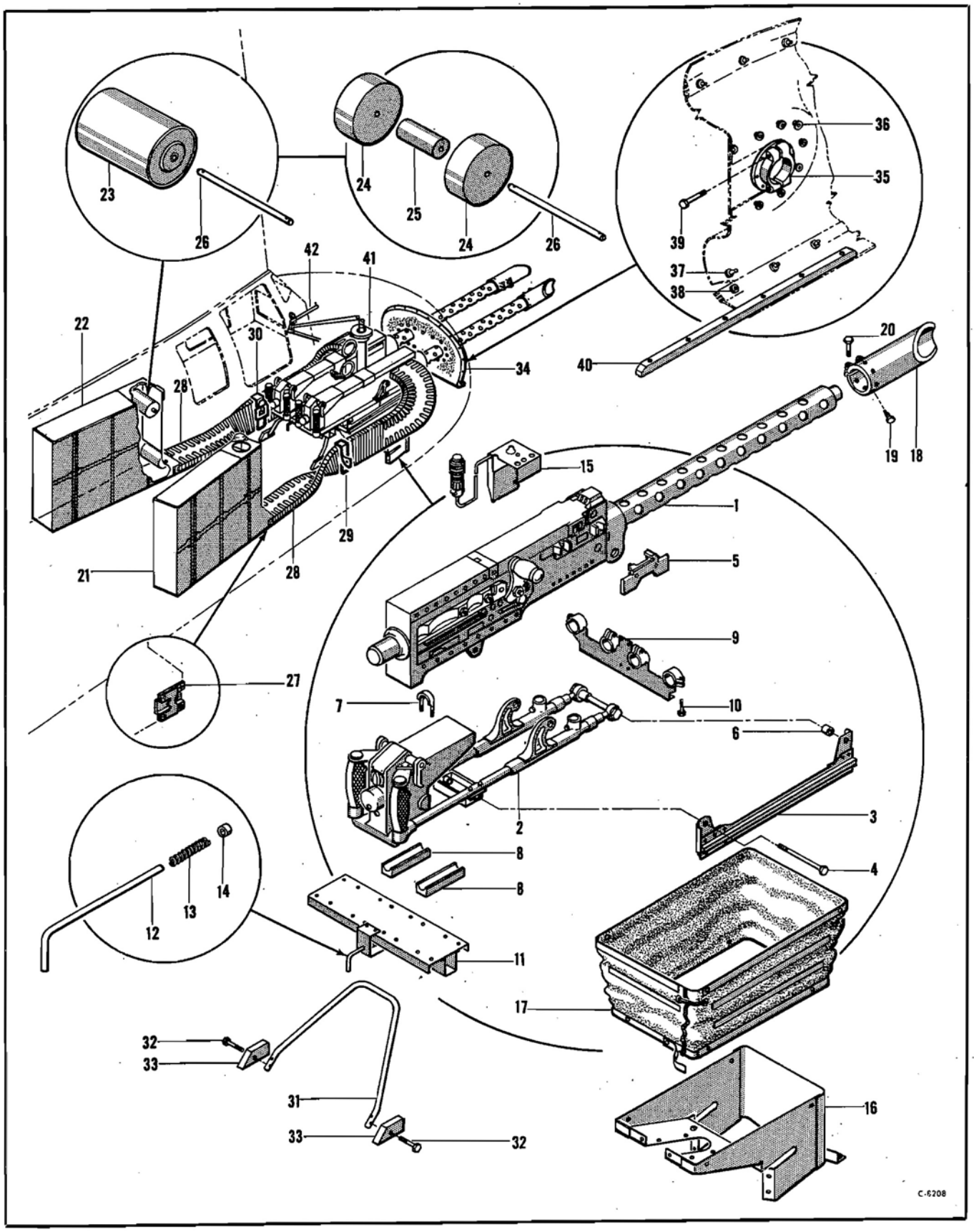

Figure 151—Tail Gun Equipment

RESTRICTED
PUBLISHED BY AVIALOGS.COM

FUSELAGE

Tail Gun Equipment

Figure & Index No.	Part Number	1 2 3 4 5 6 7 Nomenclature	Usage Code	Units Per Assy.
		Tail Gun Equipment		
	9-3610	Installation—Rear gun	PB	NP
151-1	M2	Gun—50 caliber machine	PB	2
2	NO NUMBER	Adapter Assembly (Spec 24730) (Type E-11) GFE	PB	2
3	3-13532	Support Assembly—Ammunition feed (LH gun)	PB	1
	3-13532-1	Support Assembly—Ammunition feed (RH gun)	PB	1
4	NAS57S435	Bolt—Close tolerance	PB	2
5	37B2675-1	Mount—Ammunition (Type C-2) (LH gun)	OA	1
	43A6953R	Mount Assembly (Type C3A RH) (LH gun)	WI	q
	37B2675-1	Mount—Ammunition (Type C-2) (RH gun)	OA	1
	43A6953L	Mount Assembly (Type C3A LH) (RH gun)	WI	1
6	1-18169-38	Spacer—9-16 bolt	PB	2
7	BAC543-12-16	Clamp—Tube strap	PB	8
	AN365-1032	Nut—Self-locking	PB	16
8	1-18407	Spacer—Rear gun	PB	4
	6-9589	Support Assembly—Rear gun	PB	1
9	6-9589-1	Weld Assembly	PB	1
10	AN3-7A	Bolt—Aircraft	PB	4
	AN365-1032	Nut—Self-locking	PB	4
11	6-13378	Channel Assembly—Rear gun stowage	PB	1
12	1-27399	Lever—Rear gun stowage	PB	1
13	1-27603	Spring—Compression	PB	1
14	1-27602	Collar—Rear gun stowage	PB	1
15	NO NUMBER	Heater—Gun breech (Spec 24864) (Type J-1 LH) (LH gun)	PB	1
	NO NUMBER	Heater—Gun breech (Spec 24864) (Type J-1 RH) (RH gun)	PB	1
	15-7777	Installation—Tail gun chute	PB	NP
16	15-7776	Chute Assembly—Tail gun	PB	1
17	15-7775	Hopper Assembly—Tail gun	PB	1
	6-9622	Installation—50 caliber gun stabilizer	PB	NP
18	3-14078	Stabilizer Assembly—50 caliber gun (LH gun)	PB	1
	3-14078-1	Stabilizer Assembly—50 caliber gun (RH gun)	PB	1
19	1-20065	Bolt—5-16 24 special	PB	4
20	AN4-13	Bolt—Aircraft	PB	4
	AN310-4	Nut—Aircraft castle	PB	4
	15-7524	Installation—Ammunition box and track (LH)	PB	NP
	15-7524-1	Installation—Ammunition box and track (RH)	PB	NP
21	15-7486	Box Assembly—50 caliber ammunition (LH)	PB	1
22	15-7486-1	Box Assembly—50 caliber ammunition (RH)	PB	1
23	3-13797	Roller Assembly—Ammunition box	OA	2
24	3-21396	Roller—Ammunition box	KJ	4
25	3-21396-1	Roller—Ammunition box	KJ	2
26	1-30403	Rod—Roller ammunition box	PB	2
27	3-20562	Support Assembly—Ammunition box	PB	2
28	6-16324-2	Chute Assembly—Flexible ammunition	PB	1
	LLB50G1	Adapter—Gun end (Smoot-Holman) GFE	PB	1
	LLB50M3	Adapter—Box end (Smoot-Holman) GFE	PB	1
	LLB50-63	Chute (Smoot-Holman) GFE	PB	1
29	3-21907	Strap Assembly—Flexible chute (LH)	PB	1
30	3-21907-1	Strap Assembly—Flexible chute (RH)	PB	1
	15-7360-83	Enclosure Assembly—Rear gun (see fig. 81)	PB	Ref
	15-7360-90	Enclosure Assembly—Rear gun (see fig. 81)	KM	Ref
	15-7360-84	Shell Assembly—Lower	PB	1
	9-3680	Installation—Rear gun stowage support	PB	NP
31	6-9446	Brace Assembly—Rear gun stowage	PB	1
32	AN3-16	Bolt—Aircraft	PB	2
33	9-3680-2	Spacer	PB	2
	AN310-3	Nut—Aircraft castle	PB	2
	15-7520	Installation—Tail gun cover	All	NP
34	15-7520-35	Cover Assembly—Tail gun	All	1
	15-7520-33	Cover Assembly	All	1
35	1-18295	Collar—Tail gun cover	All	4
36	AN227-8B	Stud—Wire spring clamp type	All	16
	AN227-9B	Eyelet—Wire spring clamp type	All	16
	15-7520-36	Frame Assembly	All	1
37	AN227-19BL	Stud—Large curtain type post	All	22
	AN227-20B	Plate—Large curtain type	All	22
38	AN227-15BS	Socket—Large curtain type	All	22
	AN227-16B	Plate—Large curtain type	All	22
39	AN3-13A	Bolt—Aircraft	All	4
40	1-24206	Block—Tail gun rub	WI	1
41	15-7518-1	Mount Assembly—Rear gun (see fig. 80)	PB	Ref
42	15-7516	Installation—Rear gun sight (see fig. 152)	PB	NP

PUBLISHED BY AVIALOGS.COM

FUSELAGE

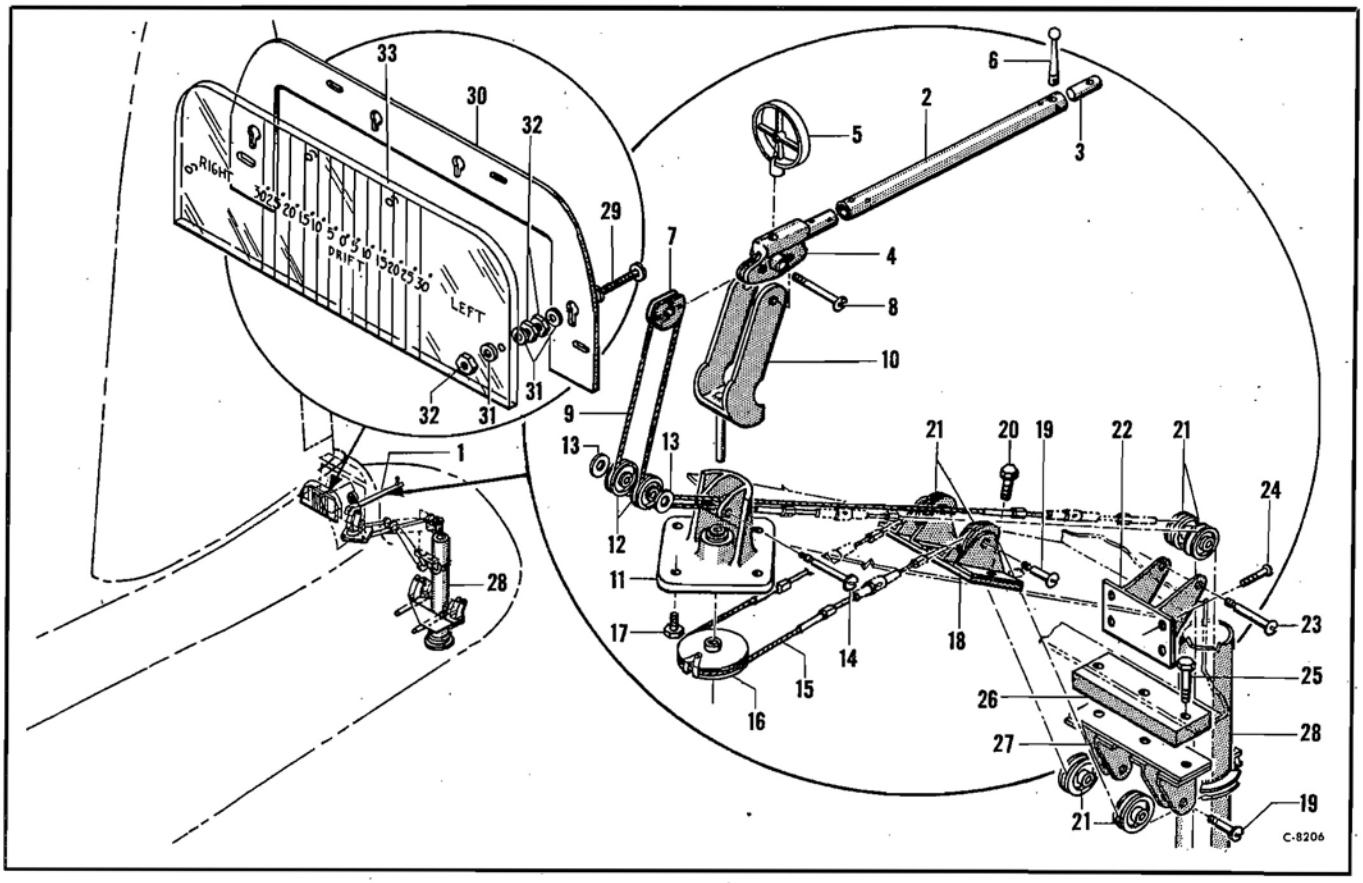

Figure 152—Tail Gun Sighting Equipment

Tail Gun Sighting Equipment

Figure & Index No.	Part Number	1 2 3 4 5 6 7 Nomenclature	Usage Code	Units Per Assy.
		Tail Gun Sighting Equipment		
	55-7377	Fuselage Assembly (see fig. 71)	All	Ref
	15-7360-83	Enclosure Assembly—Tail gun (see fig. 81)	PB	Ref
	15-7516	Installation—Rear gun sight	PB	NP
152-1	3-13519-5	Sight Assembly—Rear gun	PB	1
2	3-13519-2	Tube	PB	1
3	3-13519-1	Plug	PB	1
4	1-18296-4	Fitting—Rear gun sight	PB	1
5	1-22607	Sight Assembly—Gun ring	PB	1
6	1-18302	Bead—Rear gun sight	PB	1
7	1-26403-2	Quadrant—Rear gun sight	PB	1
8	AN3-15	Bolt—Aircraft	PB	1
9	3-13519-3	Cable Assembly	PB	1
	15-7516-1	Mount Assembly	PB	1
10	1-19087-4	Yoke Assembly—Sight mount	PB	1
11	1-18280	Support Assembly—Gun sight	PB	1
	AN201K4A	Bearing—Ball	PB	2
12	AN210-1A	Pulley—Anti-friction bearing control	PB	2
13	41-5951-40-13	Washer	PB	2
14	AN23-22	Bolt—Clevis	PB	1
15	15-7516-4	Pulley Assembly—Rear gun sight	PB	1
16	1-19083	Pulley Assembly	PB	1
17	AN3-5A	Bolt—Aircraft	PB	4
18	1-18263	Bracket Assembly—Control pulley	PB	1
19	AN23-13	Bolt—Clevis	PB	4
20	AN3-5A	Bolt—Aircraft	PB	3
21	AN210-1A	Pulley—Anti-friction bearing control	PB	6
22	1-18253	Bracket—Control pulley	PB	1
23	AN23-17	Bolt—Clevis	PB	1
24	AN520-10R8	Screw—Round head	PB	4
25	AN3-11A	Bolt—Aircraft	PB	3
26	1-18319	Spacer—Micarta	PB	1
27	1-18264	Bracket Assembly—Control pulley	PB	1
	15-7518	Installation—Rear gun mount	PB	NP
28	15-7518-1	Mount Assembly (see fig. 80)	PB	1
	15-10422	Installation—Rear gunners azimuth scale	PB	NP
29	AN526-1032-24	Screw—Truss head	PB	4
30	6-13181	Support—Azimuth scale	PB	1
31	AN960-10L	Washer—Plain	PB	16
32	AN364-1032	Nut—Self-locking	PB	12
33	6-13183	Scale—Azimuth	PB	1

RESTRICTED
PUBLISHED BY AVIALOGS.COM

PUBLISHED BY AVIALOGS.COM

FUSELAGE

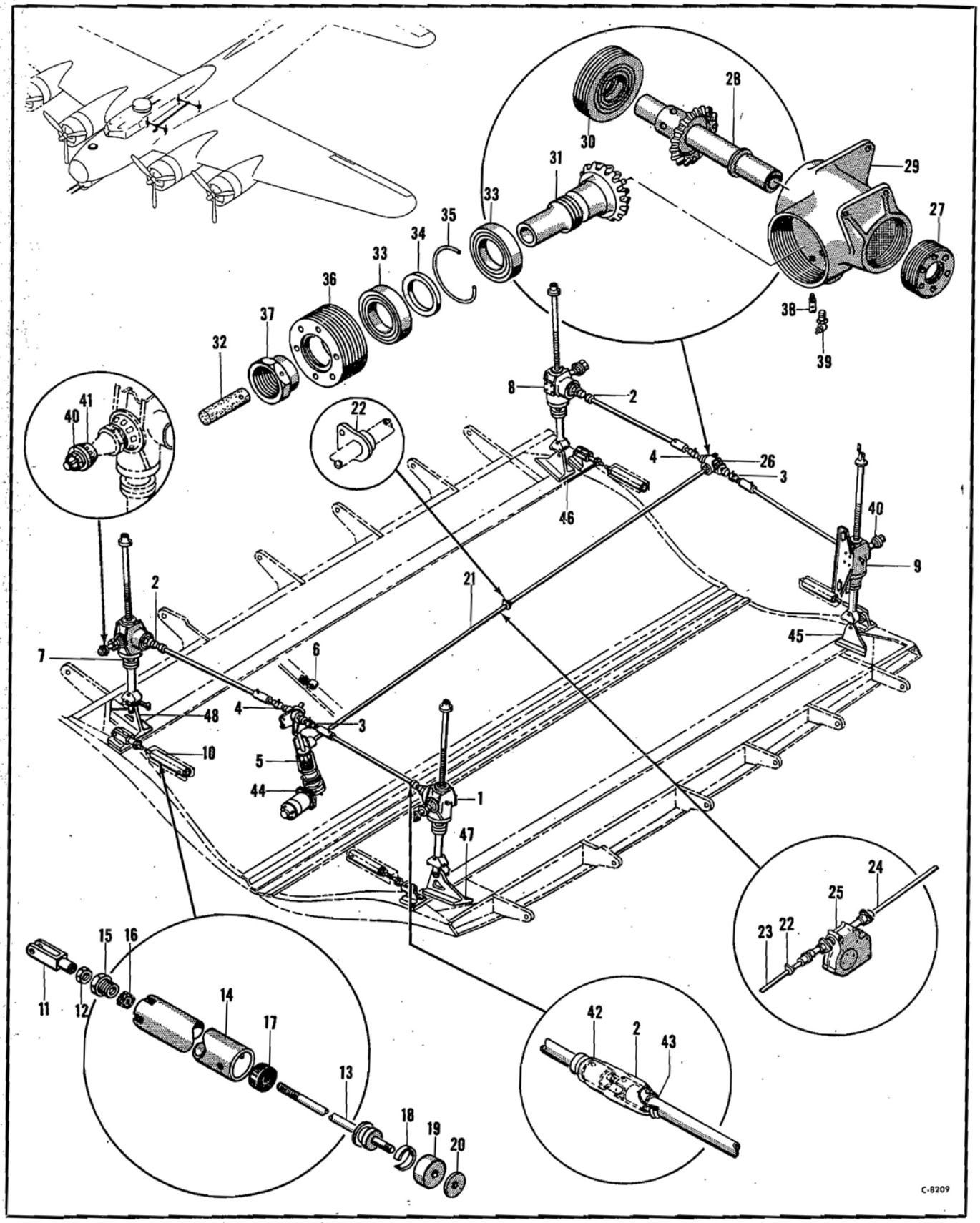

Figure 154—Bomb Door Control

PUBLISHED BY AVIALOGS.COM

FUSELAGE

Bomb Door Control

Figure & Index No.	Part Number	1 2 3 4 5 6 7 Nomenclature	Usage Code	Units Per Assy.
		Bomb Door Control		
	65-4139-501	Installation—Bomb door control (see fig. 159)	All	NP
154-1	65-4127-504	Screw Assembly—Bomb door controls (see fig. 155)	All	1
	53-7977	Shaft Assembly—Bomb door controls	All	2
	53-7977-1	Shaft Assembly—Bomb door controls	All	2
2	53-7977-502	Joint Assembly	All	1
3	53-7977-503	Joint Assembly (used on 53-7977 only)	All	1
4	53-7977-504	Joint Assembly (used on 53-7977-1 only)	All	1
	270B16	Joint—Universal (used on 53-7977-502, -503 and -504)	OB	1
	44B6540	Joint—Universal (used on 53-7977-502, -503 and -504)	IM	1
	41-7811	Bushing—Univ joint adap (used on 53-7977-503 and -504)	All	1
	65-4101-502	Installation—Bomb door control gear	All	NP
5	65-4101-504	Gear Assembly (see fig. 156)	All	1
6	21-9587-5	Support Assembly—Bomb door crank	All	1
	A1317-1	Bearing—Oilite (Chrysler)	All	1
7	65-4127-503	Screw Assembly—Bomb door controls (see fig. 155)	All	1
8	65-4127-506	Screw Assembly—Bomb door controls (see fig. 155)	All	1
9	65-4127-508	Screw Assembly—Bomb door controls (see fig. 155)	OA	1
	65-4127-505	Screw Assembly—Bomb door controls (see fig. 155)	KJ	1
	6-8345-18	Installation—Bomb door check LH	All	NP
	6-8345-19	Installation—Bomb door check RH	All	NP
10	6-8345-20	Check Assembly	All	1
11	51-1107	Bolt—5-16 clevis	All	1
12	AN316-5R	Nut—Aircraft check	All	1
13	51-872-5	Rod Assembly—Bomb door check	All	1
14	6-8345-3	Cylinder Assembly—Weld	All	1
15	51-873	Nut—Packing	All	1
16	117	Packing (Garlock)	All	1
17	51-1108-36-10	Washer—1-2 neoprene	All	1
18	6-8345-15	Spring—Expander	All	1
19	48-9-808A	Washer—Cup (Graton and Knight Co.)	All	1
20	21-6588-80-21	Washer—.188 steel	All	1
21	41-6608	Shaft Assembly—Bomb door controls	OA	1
22	41-9882	Bearing Assembly—Bomb door controls	All	1
	A542	Bearing (Fafnir)	All	1
23	3-24426	Shaft Assembly—Bomb door controls	KJ	1
	3-24424	Shaft—Coupling	KJ	1
24	3-24426-1	Shaft Assembly—Bomb door controls	KJ	1
	3-24424	Shaft—Coupling	KJ	1
25	15-13091	Installation—Bomb door limit switch (see fig. 157)	KJ	NP
	59-2018	Installation—Bomb door controls gear	All	NP
26	59-2018-500	Gear Assembly	All	1
27	21-9492	Bearing Assembly—Bomb door controls	All	1
	S8K	Bearing (Fafnir)	All	1
28	41-7995	Shaft Assembly—Bomb door controls	All	1
	43-7863-2	Gear—Bomb door controls set	All	1
29	46-4869	Housing—Bomb door controls	All	1
30	21-9491	Bearing Assembly—Bomb door controls	All	1
	S10K	Bearing (Fafnir)	All	1
31	41-7949	Gear—Bomb door controls	All	1
32	59-2018-400	Plug	All	1
	51-477	Bearing Assembly—Bomb door controls	All	1
33	S12FT	Bearing (Fafnir)	All	2
34	3-20792	Spacer—Bearing	All	1
35	3-23098	Ring—Retainer	All	1
36	51-476	Retainer Assembly—Bomb door controls	All	1
37	41-7956	Nut—1 1-4 12 special	All	1
38	51-778	Screw—Set	HA	3
	AN565B10-4	Screw—Headless set	JI	3
39	AN286-4	Fitting—Lubricator	All	1
40	41-9868	Seal—Bearing	All	4
41	A4050	Cone (Timken Roller Bearing Co.)	All	4
	21-9751-16	Installation—Universal grease boot	VI	NP
42	21-9751-8A	Boot	VI	1
43	41-7811	Bushing—Joint adapter	All	8
44	1073-1A	Motor—Bomb door (Eclipse) (see T.O. 03-1-5) (see fig. 113)	MB	Ref
	1073-1B	Motor—Bomb door (Eclipse) (see T.O. 03-1-5) (see fig. 113)	FM	Ref
45	3-11771	Fitting Assembly—Bomb door front (LH) (see fig. 72)	All	Ref
46	3-11771-1	Fitting Assembly—Bomb door front (RH) (see fig. 72)	All	Ref
47	3-11770	Fitting Assembly—Bomb door rear (LH) (see fig. 72)	All	Ref
48	3-11770-1	Fitting Assembly—Bomb door rear (RH) (see fig. 72)	All	Ref

PUBLISHED BY AVIALOGS.COM

FUSELAGE

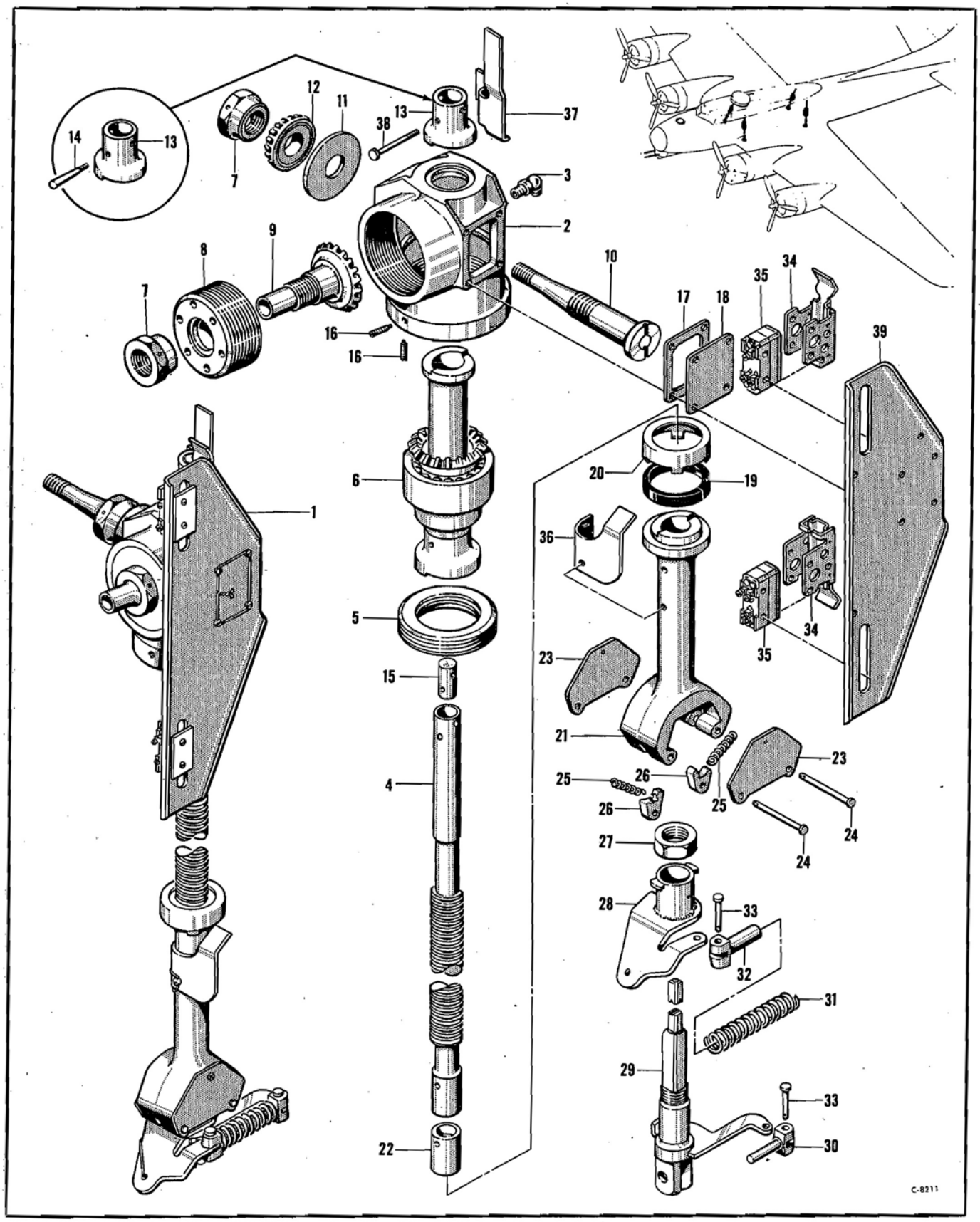

Figure 155—Bomb Door Controls Screw Assembly

PUBLISHED BY AVIALOGS.COM

FUSELAGE

Bomb Door Controls Screw Assembly

Figure & Index No.	Part Number	1 2 3 4 5 6 7 Nomenclature	Usage Code	Units Per Assy.
	65-4127-503	Screw Assembly—Bomb door controls (see fig. 154)	All	Ref
	65-4127-504	Screw Assembly—Bomb door controls (see fig. 154)	All	Ref
	65-4127-506	Screw Assembly—Bomb door controls (see fig. 154)	All	Ref
155-1	65-4127-508	Screw Assembly—Bomb door controls (see fig. 154)	OA	Ref
	65-4127-505	Screw Assembly—Bomb door controls (see fig. 154)	KJ	Ref
	46-4911	Housing Assembly—Bomb door controls (used on 65-4127-504 and -506)	All	1
2	46-4911-1	Housing Assy—Bomb door controls (used on 65-4127-503, -508 and -505)	All	1
	46-4911-2	Housing (used on 46-4911)	All	1
	46-4911-3	Housing (used on 46-4911-1)	All	1
	46-4911-4	Washer	All	1
3	AN286-4	Fitting—Lubricator	All	1
4	3-15109-2	Screw—Bomb door control (LH thread) (used on 65-4127-504, -508 and -505)	All	1
	3-15109-3	Screw—Bomb door control (RH thread) (used on 65-4127-503 and -506)	All	1
5	41-9892	Retainer Assembly—Bomb door controls	All	1
6	43-7935-400	Nut Assembly—Bomb door control (used on 65-4127-504, -508 and -505)	All	1
	43-7935-401	Nut Assembly—Bomb door control (used on 65-4127-503 and 506)	All	1
	3-7934-1	Gear—Bomb door controls	All	1
	5207	Bearing—Ball (Fafnir)	All	1
7	41-8267	Nut—Special	All	2
8	21-9672	Bearing Assembly—Bomb door controls	All	1
	5205	Bearing—Ball (Fafnir)	All	1
9	3-7934-2	Gear Assembly—Bomb door controls	All	1
10	21-9683	Shaft—Bomb door controls	All	1
11	21-9824	Seal Assembly—Bomb door controls	All	1
12	07087	Cone—Roller bearing	All	1
13	21-9677	Stop—Bomb door controls (used on 65-4127-504, -508 and -505)	All	1
	21-9677-1	Stop—Bomb door controls (used on 65-4127-503 and -506)	All	1
14	AN386-1-8	Pin—Threaded taper (used on all but 65-4127-508)	All	2
15	65-4127-500	Plug	All	1
16	51-778	Screw—Set	HA	2
	AN565B10-4	Screw	JI	2
17	65-4127-6	Gasket	All	1
18	21-9682	Plate—Bomb door controls	All	1
	AN500A10-6	Screw—Fillister head (used on all but 65-4127-508)	All	4
	41-7584	Stop Assembly—Bomb door control (used on 65-4127-504, -508 and -505)	All	1
	41-7584-1	Stop Assembly—Bomb door control (used on 65-4127-503 and -506)	All	1
19	41-7584-2	Washer—Shock	All	1
20	41-7584-3	Cover	All	1
21	6-7198	Fitting—Bomb door controls (used on 41-7584)	All	1
	6-7198-1	Fitting—Bomb door controls (used on 41-7584-1)	All	1
22	41-6826	Guide—Bomb door controls	All	1
	AN502-416-4	Screw—Drilled fillister head	All	6
23	41-6659	Plate—Bomb door control	All	2
	AN500-8-4	Screw—Fillister head	All	2
24	AN393-55	Pin—Flat head	All	2
25	21-9886	Spring—Compression	All	2
	21-9862	Catch—Bomb door controls (used on 65-4127-504 and -506)	All	2
26	21-9862-1	Catch—Bomb door controls (used on 65-4127-503, -508 & -505)	All	2
27	41-6825	Nut—7-8 14 special	All	1
	3-9778	Collar Assembly—Bomb door controls (used on 65-4127-504 and -506)	All	1
28	3-9778-1	Collar Assembly—Bomb door controls (used on 65-4127-503, -508 and -505)	All	1
	6-8130	Terminal Assembly—Bomb door controls (used on 65-4127-504 and -506)	All	1
29	6-8130-1	Terminal Assembly—Bomb door controls (used on 65-4127-503, -508 and -505)	All	1
30	21-9861	Guide—Bomb door controls	All	1
31	21-9678	Spring—Compression	All	1
32	21-9860	Guide—Bomb door controls	All	1
33	AN392-25	Pin—Flat head	All	2
	6-11999	Installation—Bomb door switch (used on 65-4127-508)	OA	NP
	6-11999-3	Switch Assembly	OA	2
34	9-10831	Actuator (Micro Switch)	OA	1
35	WZR31	Switch (Micro Switch)	OA	1
36	1-25568-1	Striker—Limit switch	OA	1
	AN505-416-6	Screw—Flat head	OA	2
37	1-25567-1	Striker—Limit switch	OA	1
38	NAS54A13	Bolt—Close tolerance	OA	2
39	3-17015	Bracket—Limit switch	OA	1
	AN500A10-7	Screw—Fillister head	OA	4

PUBLISHED BY AVIALOGS.COM

FUSELAGE

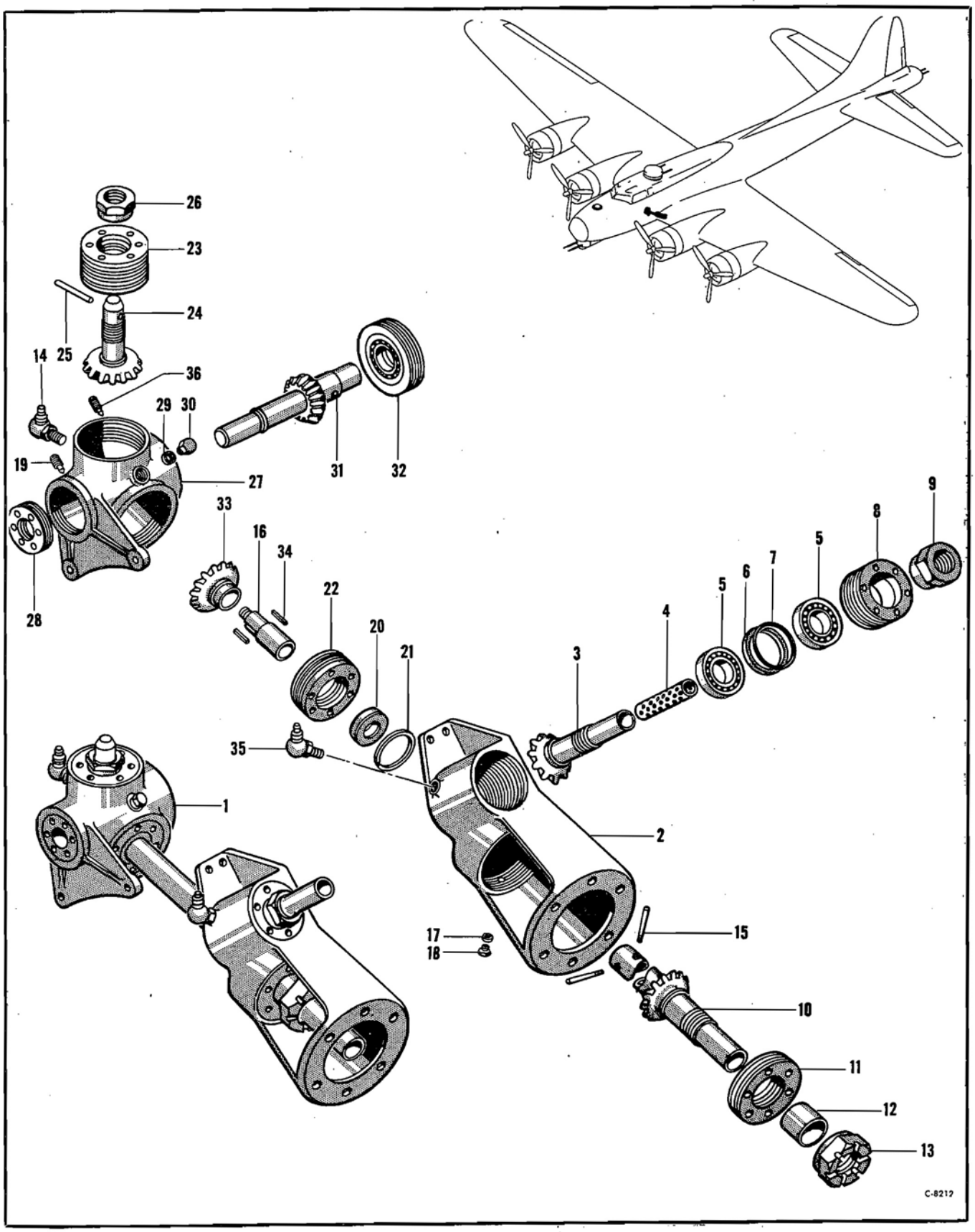

Figure 156—Bomb Door Control Gear Assembly

RESTRICTED
PUBLISHED BY AVIALOGS.COM

FUSELAGE

Bomb Door Control Gear Assembly

Figure & Index No.	Part Number	1 2 3 4 5 6 7 Nomenclature	Usage Code	Units Per Assy.
156-1	65-4101-504	Gear Assembly—Bomb door control (see fig. 154)	All	Ref
	65-4101-503	Gear Assembly	All	1
2	59-2012	Housing Assembly—Bomb door controls	All	1
3	43-7853-400	Gear—Bomb door controls set	All	1
4	65-4101-400	Plug	All	1
	51-477	Bearing Assembly—Bomb door controls	All	1
5	S12FT	Bearing (Fafnir)	All	2
6	3-20792	Spacer—Bearing	All	1
7	3-23098	Ring—Retainer	All	1
8	51-476	Retainer Assembly—Bomb door controls	All	1
9	41-7956	Nut—1 1-4 12 special	All	1
10	41-8216	Shaft Assembly—Bomb door controls	All	1
	43-7853-401	Gear	All	1
11	21-9890	Bearing Assembly—Bomb door controls	All	1
	21-9490-1	Retainer Assembly—Bomb door controls	All	1
	S12K	Bearing (Fafnir)	All	1
12	21-9457	Collar—Bearing retainer	All	1
13	AN320-20	Nut—Aircraft shear	All	1
14	AN286-4	Fitting—Lubricator	All	1
15	AN386-1-8	Pin—Threaded taper	All	2
16	41-8217-1	Terminal—Tube end	All	1
17	AN900-6	Gasket—Annular copper	All	1
18	AN905-6	Plug—Hex	All	1
19	51-778	Screw—Set	HA	2
	AN566B10-4	Screw—Headless set	AI	2
20	21-9579	Collar—Bearing retainer	All	1
21	21-6385-80-45	Shim—.032 brass washer	All	2
22	21-9880	Bearing Assembly—Bomb door controls	All	1
	21-9511-1	Retainer Assembly—Bomb door controls	All	1
	S10FT	Bearing (Fafnir)	All	1
	21-9881-1	Gear Assembly—Bomb door controls	All	1
23	21-9879	Bearing Assembly—Bomb door controls	All	1
	21-9511	Retainer Assembly—Bomb door controls	All	1
	S10FT	Bearing (Fafnir)	All	2
24	43-7863-1	Gear Assembly—Bomb door control set	All	1
25	21-9882	Pin	All	1
26	41-8267-1	Nut—Special	All	1
27	43-7870	Housing—Bomb door controls	All	1
28	21-9492	Bearing Assembly—Bomb door controls	All	1
	S8K	Bearing (Fafnir)	All	1
29	AN900-6	Gasket—Annular copper	All	1
30	AN905-6	Plug—Hex	All	1
31	41-7995	Shaft Assembly—Bomb door controls	All	1
	43-7863-2	Gear—Bomb door control set	All	1
32	21-9491	Bearing Assembly—Bomb door controls	All	1
	S10K	Bearing (Fafnir)	All	1
33	43-7863-400	Gear—Bomb door control set	All	1
34	BAC1002-10	Key—5-32 square	All	2
35	AN286-4	Fitting—Lubricator	All	1
36	51-778	Screw—Set	HA	4
	AN565B10-4	Screw—Headless set	AI	4

PUBLISHED BY AVIALOGS.COM

FUSELAGE

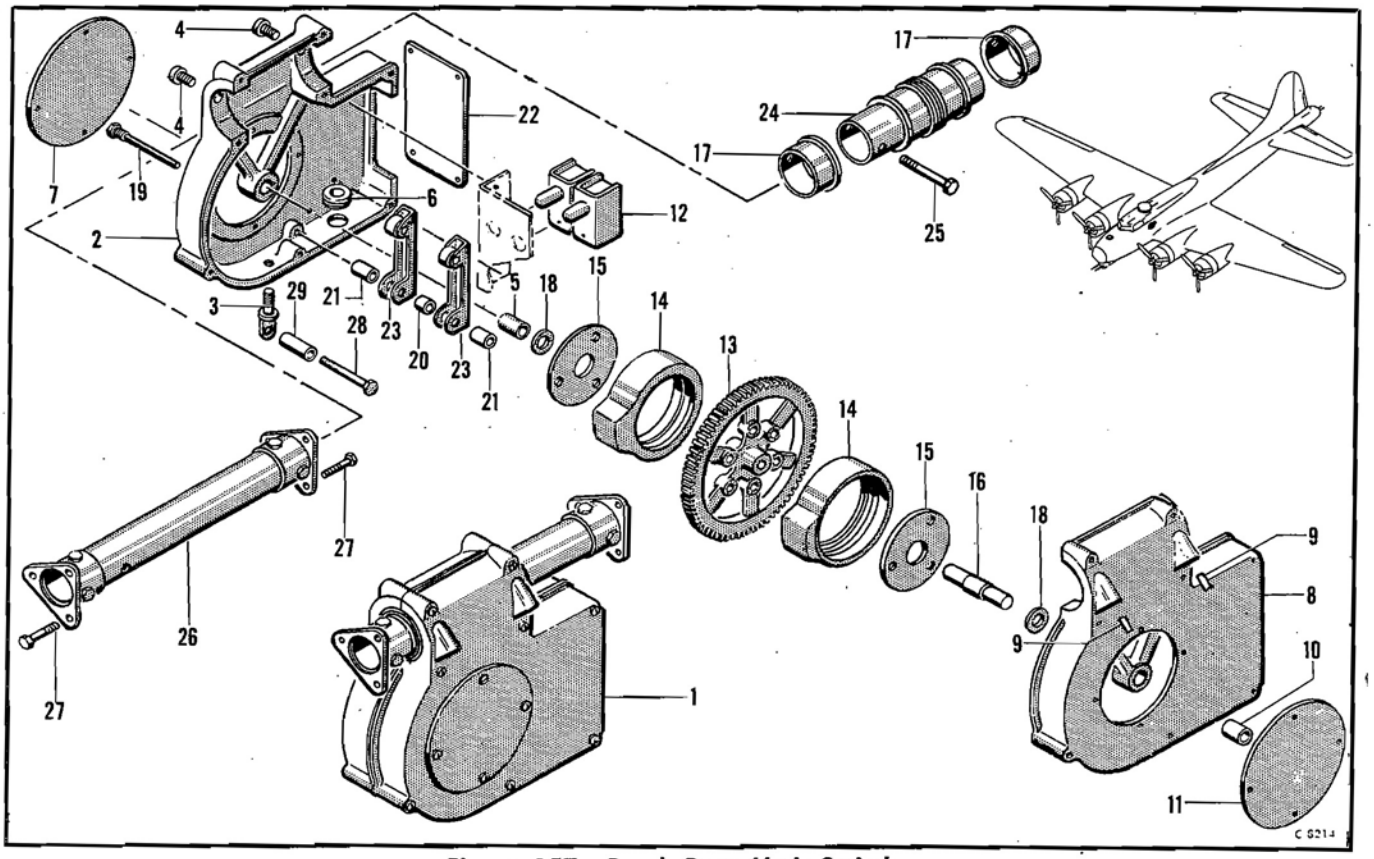

Figure 157—Bomb Door Limit Switch

Bomb Door Limit Switch

Figure & Index No.	Part Number	1 2 3 4 5 6 7 Nomenclature	Usage Code	Units Per Assy.
	15-13091	Installation—Bomb door limit switch (see fig. 154)	KJ	NP
157-1	15-13091-1	Switch Assembly	IJ	1
	15-13091-4	Switch Assembly	PQ	1
	9-5259-6	Switch Assembly—Limit	IJ	1
	9-5259-11	Switch Assembly—Limit	PQ	1
	9-5259-1	Housing Assembly	KJ	1
2	9-5258	Housing—Limit switch	KJ	1
3	AN42-4	Bolt—Eye	KJ	1
4	1-25433	Screw—Dowel	KJ	2
5	A449-1	Bushing—Oilite (Chrysler Corp.)	KJ	1
6	M19336	Grommet (Goodrich)	KJ	1
7	1-25429	Plate—Cover	KJ	1
	9-5259-2	Housing Assembly	KJ	1
8	9-5258-1	Housing—Limit switch	KJ	1
9	1-25720	Felt—Oil retainer	KJ	2
10	A449-1	Bushing—Oilite (Chrysler Corp.)	KJ	1
11	1-25429	Plate—Cover	KJ	1
	9-5259-3	Angle Assembly	IJ	1
	9-5259-10	Angle Assembly	PQ	1
12	WZ-RQ41	Switch (Micro Switch)	IJ	2
	BZ-RQ41	Switch (Micro Switch)	PQ	2
	9-5259-4	Gear Assembly	KJ	1
13	3-16601	Gear—Limit switch worm	KJ	1
14	3-18044	Cam—Limit switch	KJ	2
15	1-25426	Ring—Clamp	KJ	2
16	1-25464	Shaft—Limit switch	KJ	1
17	1-25427	Bushing—Oilite	KJ	2
18	1-25940	Washer—.031 steel	KJ	2
19	1-25463	Pin—Actuator	KJ	1
20	BAC1601-19	Spacer	KJ	1
21	A101-1	Bushing—Oilite (Chrysler Corp.)	KJ	2
22	1-25428	Plate—Cover	KJ	1
23	1-25489	Actuator Assembly—Switch	KJ	2
24	1-25430-1	Worm—Limit switch	KJ	1
25	AN3-17	Bolt—Aircraft	KJ	1
26	3-24441	Shaft Assembly—Bomb door controls	KJ	1
	3-24424-1	Coupling—Shaft	KJ	2
	AN3-20A	Bolt—Aircraft	KJ	4
27	AN3-5A	Bolt—Aircraft	KJ	6
28	AN3-16A	Bolt—Aircraft	KJ	1
29	BAC1603-68	Spacer	KJ	1

PUBLISHED BY AVIALOGS.COM

FUSELAGE

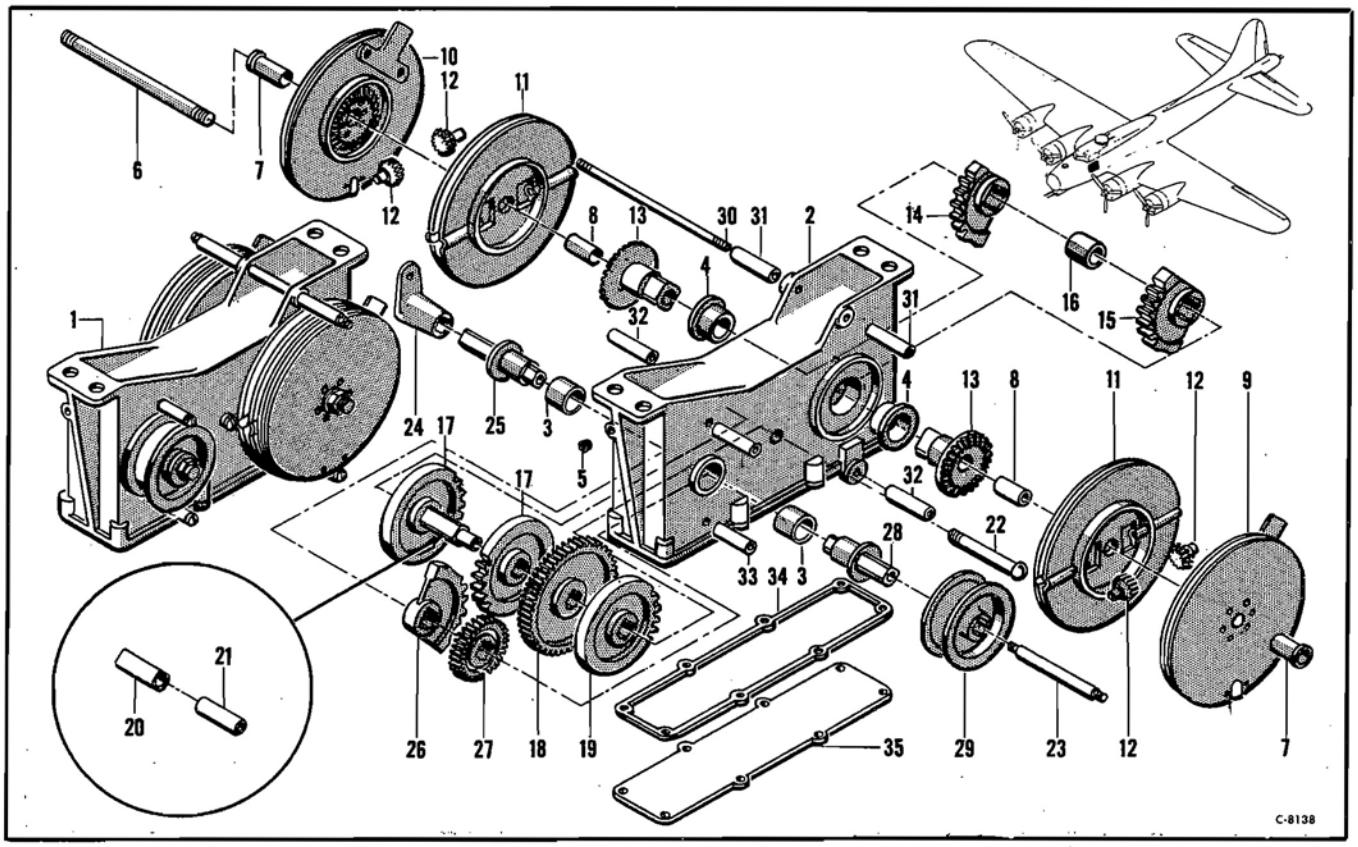

Figure 158—Bomb Control Unit Assembly

Bomb Control Unit Assembly

Figure & Index No.	Part Number	1 2 3 4 5 6 7 Nomenclature	Usage Code	Units Per Assy.
158-1	15-10967	Unit Assembly—Bomb control (see fig. 66 and 159)	HA	Ref
	9-5804	Housing Assembly—Bomb control	HA	1
2	15-10959	Housing—Bomb control	HA	1
3	9-5804-1	Bushing	HA	2
4	1-27927	Bushing—Gear control	HA	2
5	AN913-IS	Fitting—Pipe	HA	2
6	1-28200	Stud—Bomb control	HA	1
	AN310-6	Nut—Aircraft castle	HA	2
7	1-27932	Bushing—Bomb control	HA	2
8	1-30623	Sleeve—Bomb control	HA	2
9	3-19636	Sheave Assembly—Bomb control	HA	1
10	3-19636-1	Sheave Assembly—Bomb control	HA	1
11	3-19635	Sheave Assembly—Control	HA	2
	6-13530	Sheave—Control	HA	1
	1-28185	Bushing—Differential	HA	2
12	1-27918-1	Gear—Sheave control	HA	4
13	1-27928-1	Gear—Bomb control	HA	2
14	3-19597-1	Gear—Follower	HA	1
15	3-19598	Gear—Follower	HA	1
16	1-27906	Spacer—Bomb release control	HA	1
17	3-19591	Gear—Drive	HA	2
18	3-19612	Gear—Intermediate upper	HA	1
19	3-19603	Gear—Drive	HA	1
20	1-27746	Shaft	HA	1
21	BAC274CS4-104	Bushing—Bearing	HA	1
22	AN24-40	Bolt—Clevis	HA	1
	AN320-4	Nut—Aircraft shear	HA	1
23	1-28204	Stud—Main drive	HA	1
	AN310-4	Nut—Aircraft castle	HA	2
24	3-19617	Lever—Door release	HA	1
25	1-27931-1	Shaft—Release control	HA	1
26	3-19597	Gear—Follower	HA	1
27	3-19613	Gear—Intermediate lower	HA	1
28	1-27931	Shaft—Release control	HA	1
29	1-22888-1	Drum—Emergency control	HA	1
30	1-28859	Stud—Number 10-32 thread	HA	1
31	BAC1603-86	Spacer	HA	2
32	BAC1603-64	Spacer	HA	2
33	BAC1603-72	Spacer	HA	2
34	3-19877	Gasket—Bomb control housing	HA	1
35	3-19875	Cover—Bomb control housing	HA	1

PUBLISHED BY AVIALOGS.COM

FUSELAGE

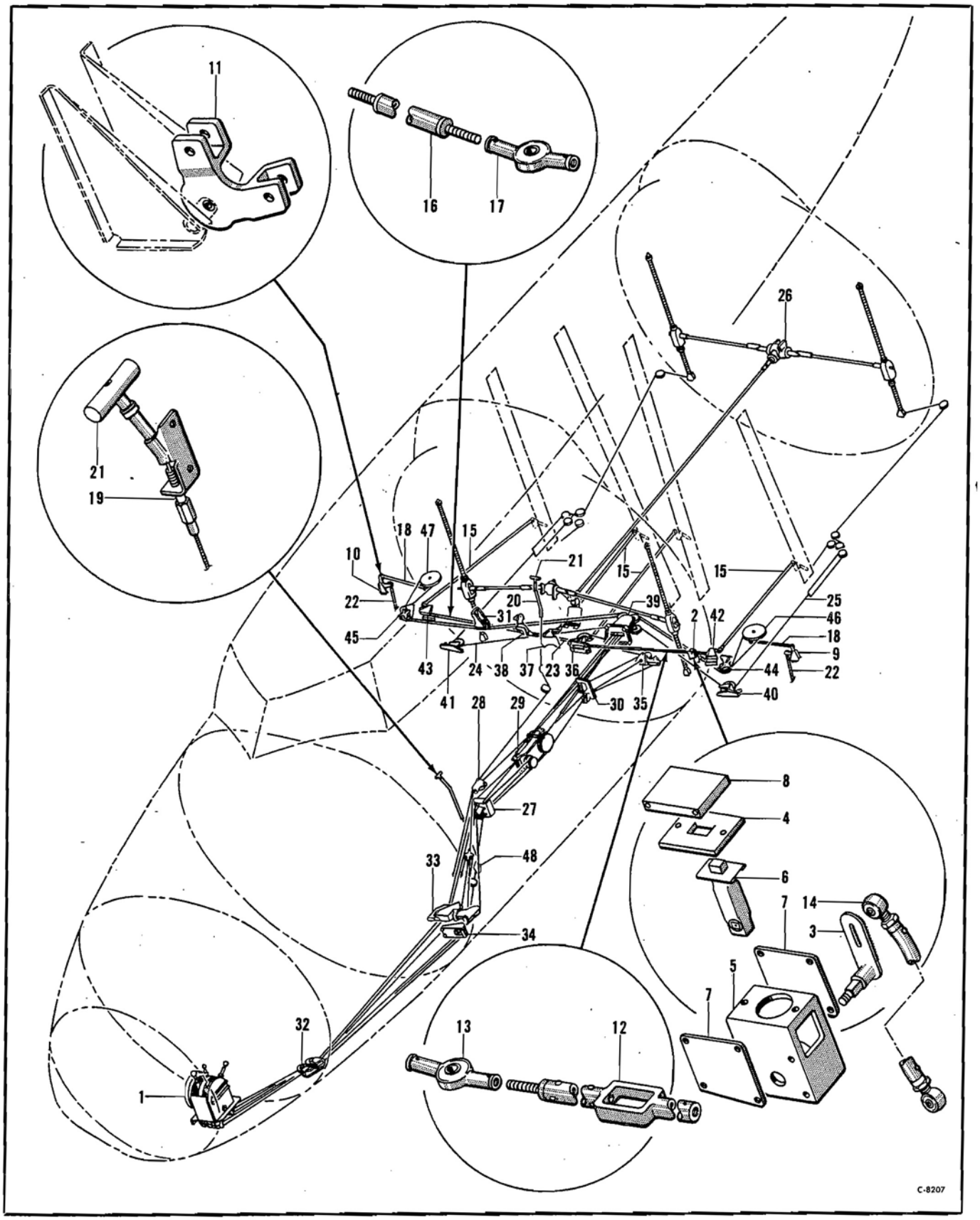

Figure 159—Bomb Rack and Door Control

PUBLISHED BY AVIALOGS.COM

FUSELAGE

Bomb Rack and Door Control

Figure & Index No.	Part Number	1 2 3 4 5 6 7 Nomenclature	Usage Code	Units Per Assy.
		Bomb Rack and Door Control		
	15-11194	Installation—Bomb rack and door control	HA	NP
	15-10626	Installation—Bombardiers stand	HA	NP
159-1	15-10626-1	Stand Assembly—Bombardiers (see fig. 153)	HA	1
	43-8148	Installation—Bomb control lock	HA	NP
2	43-8148-400	Lock Assembly—Bomb control	HA	1
3	21-9417	Crank Assembly—Bomb control lock	HA	1
4	21-6966-1	Fairlead—Bomb control	HA	1
5	41-9908	Housing—Bomb control lock	HA	1
6	4T0KD	Lock (Best Universal Lock)	HA	1
7	21-6974-1	Plate—Fairlead support	HA	2
8	21-6979	Fairlead—Bomb control	HA	1
	41-5195	Washer—Serrated	HA	1
	6-11940	Installation—Bomb control bracket (LH)	HA	NP
	6-11940-1	Installation—Bomb control bracket (RH)	HA	NP
9	6-11931-6	Bracket Assembly—Bomb control (LH)	HA	1
10	6-11931-7	Bracket Assembly—Bomb control (RH)	HA	1
11	3-16445-2	Crank Assembly—Control	HA	1
	41-239-11	Rod Assembly—Bomb control	M	1
	41-239-14	Rod Assembly—Bomb control	SF	1
12	41-239-13	Tube Assembly—Bomb control	M	1
	41-239-15	Tube Assembly—Bomb control	SF	1
13	21-5538	Coupling Assembly—Control rod	HA	1
	AN3-11	Bolt—Aircraft	HA	1
	AN23-16	Bolt—Clevis	HA	1
14	1-18323	Rod Assembly—1-2 in. control	HA	1
15	3-15521-10	Rod Assembly—5-8 in. control	HA	4
	AN23-18	Bolt—Clevis	HA	1
	AN3-11	Bolt—Aircraft	HA	4
	3-21934-1	Rod Assembly—5-8 in. control	HA	1
16	3-21934-101	Weld Assembly—Control rod	HA	1
17	21-5538	Coupling Assembly—Control rod	HA	1
18	6-11058-57	Rod Assembly—Engine control	HA	2
	AN3-12	Bolt—Aircraft	HA	2
	AN3-11	Bolt—Aircraft	HA	2
19	15-11194-19	Cable Assembly—Bomb rack and door control	HA	1
20	15-11194-1	Cable Assembly—Bomb rack and door control	HA	1
21	41B10395	Handle Assembly—Control	HA	1
22	3-16944	Bearing Assembly—Bomb control	HA	2
	AN3-11	Bolt—Aircraft	HA	2
23	1-22987-1	Pin—1-4 28 threaded	HA	1
24	15-11194-9	Cable Assembly—Control	HA	1
25	15-11194-13	Cable Assembly—Control	HA	1
26	65-4139-501	Installation—Bomb door control (see fig. 154)	HA	NP
27	15-11633-1	Bracket Assembly—Bomb control (see fig. 66)	HA	Ref
28	9-6274-1	Bracket Assembly—Emergency bomb release (see fig. 66)	HA	Ref
29	15-10967	Unit Assembly—Bomb control (see fig. 158)	HA	Ref
30	9-6265-1	Bracket Assembly—Bomb release control (see fig. 66)	HA	Ref
31	6-14798-1	Bracket Assembly—External bomb control (see fig. 66)	HA	Ref
32	9-5883	Bracket—Bomb release (see fig. 68)	HA	Ref
33	15-11622-1	Bracket Assembly—Bomb release (see fig. 68)	HA	Ref
34	15-11622-2	Bracket Assembly—Bomb release (see fig. 68)	HA	Ref
	6-14528	Control Assembly—Bomb release (see fig. 68)	HA	Ref
35	15-11641-1	Bracket Assembly—Bomb control (see fig. 68)	HA	Ref
36	15-11641-2	Bracket Assembly—Bomb control (see fig. 68)	HA	Ref
37	15-11641-3	Bracket Assembly—Bomb control (see fig. 68)	HA	Ref
	3-12090-6	Crank Assembly—Control (see fig. 68)	HA	Ref
38	15-11641-4	Bracket Assembly—Bomb control (see fig. 68)	HA	Ref
39	15-11641-5	Bracket Assembly—Bomb control (see fig. 68)	HA	Ref
40	6-14550-1	Bracket Assembly—Bomb door control (LH) (see fig. 68)	HA	Ref
41	6-14557-1	Bracket Assembly—Bomb door control (RH) (see fig. 68)	HA	Ref
42	57-992	Installation—Outboard bomb control bracket (LH) (see fig. 68)	HA	NP
43	57-992-500	Installation—Outboard bomb control bracket (RH) (see fig. 68)	HA	NP
44	6-14790-2	Bracket Assembly—External bomb control (LH) (see fig. 68)	HA	Ref
45	6-14790-3	Bracket Assembly—External bomb control (RH) (see fig. 68)	HA	Ref
46	9-6105-2	Bracket Assembly—External bomb control (LH) (see fig. 74)	HA	Ref
47	9-6105-3	Bracket Assembly—External bomb control (RH) (see fig. 74)	HA	Ref
48	9-6469-1	Bracket Assembly—Emergency bomb release (see fig. 71)	HA	Ref

PUBLISHED BY AVIALOGS.COM

FUSELAGE

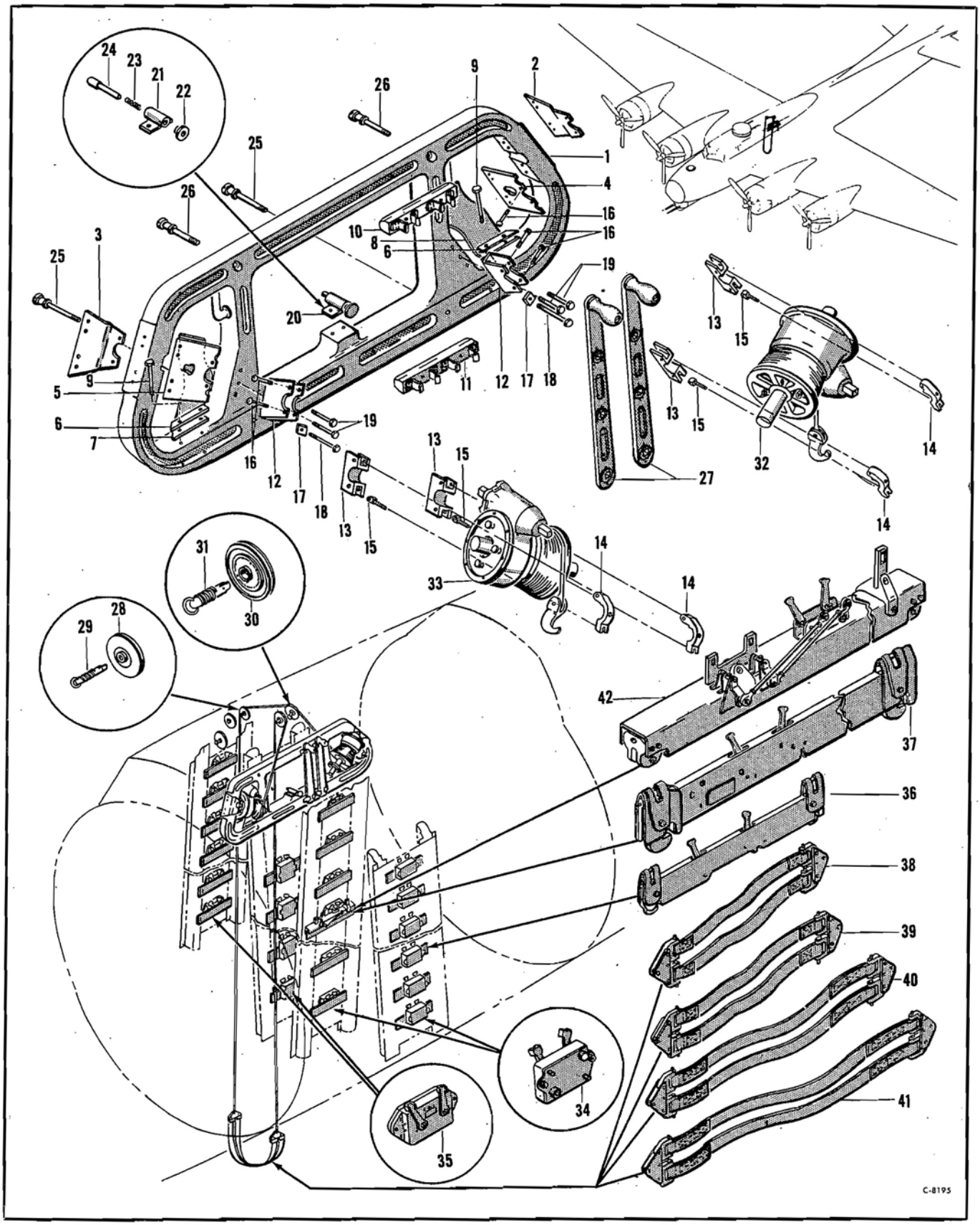

Figure 160—Internal Bomb Hoist

PUBLISHED BY AVIALOGS.COM

FUSELAGE

Internal Bomb Hoist

Figure & Index No.	Part Number	1 2 3 4 5 6 7 Nomenclature	Usage Code	Units Per Assy.
	15-7949	Installation—Internal bomb hoist	All	NP
	15-7582-4	Support Assembly—Bomb hoist	All	1
160-1	15-7582-5	Support—Bomb hoist	All	1
2	1-26477	Plate—Bomb hoist support (LH)	All	1
3	1-26477-1	Plate—Bomb hoist support (RH)	All	1
4	1-26478	Plate—Bomb hoist support (LH)	All	1
5	1-26478-1	Plate—Bomb hoist support (RH)	All	1
6	3-32442	Plate—Retainer bracket	EQ	2
7	6-22044	Bracket—Cable retainer	EQ	1
8	6-20792	Bracket—Cable retainer	EQ	1
9	AN3-23A	Bolt—Aircraft	EQ	4
10	3-13558-8	Support Assembly—Hoist handle stowage	All	1
	41-75-2	Spring—Bomb hoist crank	All	4
11	3-13533-8	Support Assembly—Hoist handle stowage	All	1
	41-75-2	Spring—Bomb hoist crank	All	4
12	1-26476	Channel—Bomb hoist	All	2
13	41-68	Bearing—Bomb hoist	All	4
14	41-67	Cap—Bomb hoist bearing	All	4
15	21-5584	Bolt—Bearing hinge	All	4
16	AN23-26A	Bolt—Clevis	All	8
17	15-7582-6	Filler	All	2
18	AN3-21A	Bolt—Aircraft	All	2
19	AN3-17A	Bolt—Aircraft	All	4
20	3-13601	Latch Assembly—Bomb hoist	All	1
21	3-13601-1	Housing Assembly (weld)	All	1
22	41-76-1	Knob—Bomb hoist lock	All	1
23	41-72	Spring—Compression	All	1
24	41-78	Pin—Bomb hoist lock	All	1
25	1-18292-48-330	Bolt—5-16 24 shoulder	GA	2
26	1-18292-48-222	Bolt—5-16 24 shoulder	GA	2
27	35B3441	Handle Assembly GFE	QC	2
28	41-4180	Pulley Assembly	All	2
	AN200KR4	Bearing—Heavy duty	All	1
29	3-6738	Bolt Assembly—Self-locking	All	2
30	41-4181	Pulley Assembly—3.50 OD	All	6
	AN200KR6	Bearing—Heavy duty	All	1
31	3-9775	Bolt Assembly—Self locking	All	6
	41-4545	Spring—Self-locking bolt	All	1
32	35G3422	Windlass Assembly—Bomb hoist GFE	QC	1
33	35G3422-1	Windlass Assembly—Bomb hoist GFE	QC	1
34	41G1742	Release—Bomb (Type A-2) GFE	HA	12
35	41G1742-1	Release—Bomb (Type A-2) GFE	HA	12
	43G19840L	Release—Bomb (Type A-4) GFE	JI	12
	43G19840R	Release—Bomb (Type A-4) GFE	JI	12
36	33D5226	Shackle (Type B-7) GFE	T	24
	43D10157	Shackle (Type B-10) GFE	JG	8
	33D5226	Shackle (Type B-7) GFE	JG	16
	43D10157	Shackle (Type B-10) GFE	DM	24
37	41E4555	Shackle (Type D-6) GFE	All	2
38	36C4441	Sling Assembly (300 pound bomb) GFE	QC	1
39	36E4442	Sling Assembly (500 and 1600 pound bomb) GFE	QC	1
40	42D6443	Sling Assembly (1000 pound bomb) GFE	QC	1
41	40G5318	Sling Assembly (2000 pound bomb) GFE	QC	1
42	15-7781	Installation—D6 bomb shackle adapter (LH) (see fig. 164)	All	NP
	15-7781-1	Installation—D6 bomb shackle adapter (RH) (see fig. 164)	All	NP

PUBLISHED BY AVIALOGS.COM

FUSELAGE

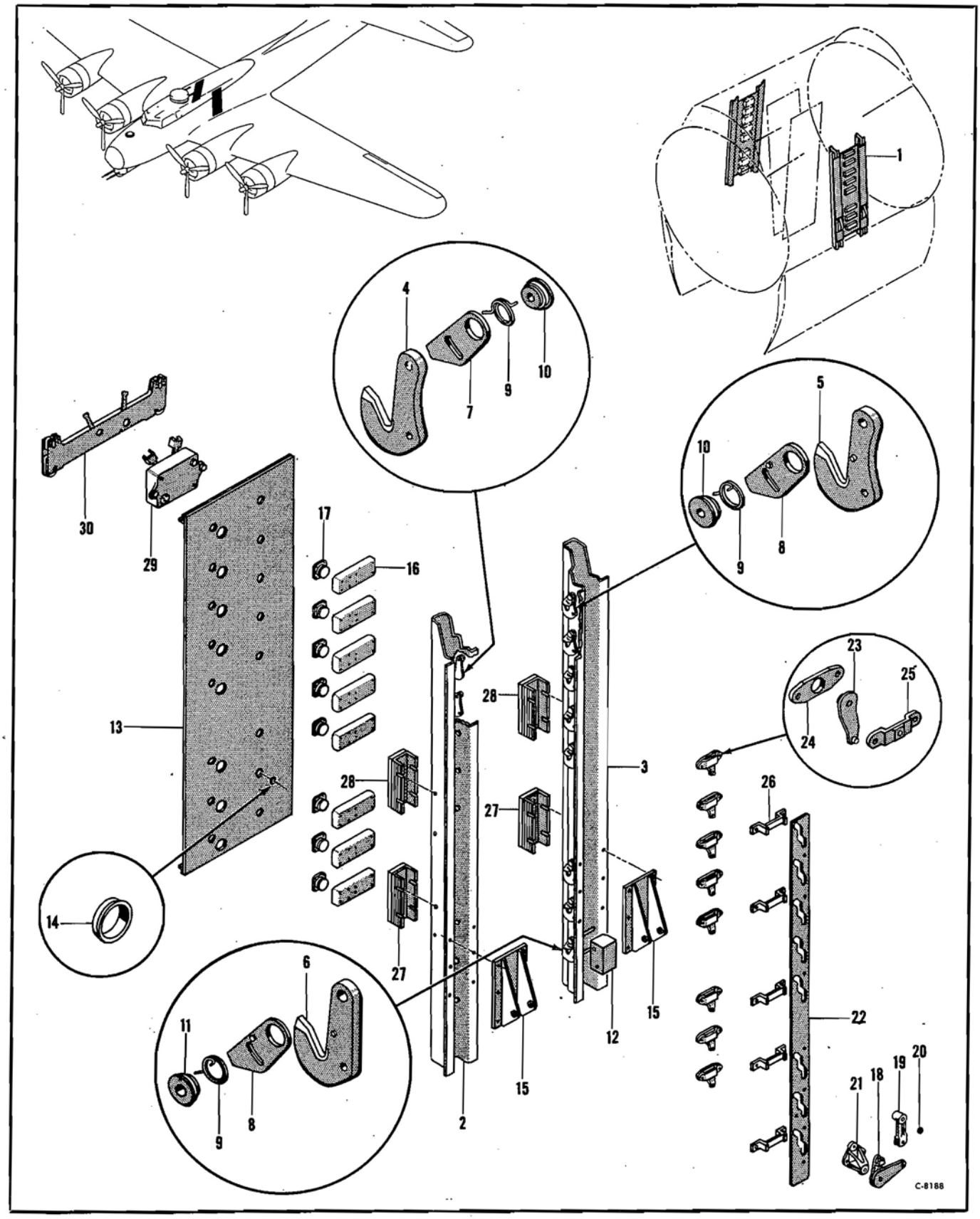

Figure 161—Outboard Internal Bomb Rack

RESTRICTED
PUBLISHED BY AVIALOGS.COM

FUSELAGE

Outboard Internal Bomb Rack

Figure & Index No.	Part Number	1 2 3 4 5 6 7 Nomenclature	Usage Code	Units Per Assy.
		Outboard Internal Bomb Rack		
	65-6806-3	Installation—Armament	All	NP
	15-7955	Installation—Bomb rack	All	NP
161-1	15-7953-9	Rack Assembly—Internal bomb outboard (LH)	HA	1
	15-7953-10	Rack Assembly—Internal bomb outboard (RH)	HA	1
	15-7953-13	Rack Assembly—Internal bomb outboard (LH)	DI	1
	15-7953-14	Rack Assembly—Internal bomb outboard (RH)	DI	1
	15-7953-49	Rack Assembly—Internal bomb outboard (LH)	DP	1
	15-7953-50	Rack Assembly—Internal bomb outboard (RH)	DP	1
	15-7951-3	Rail Assembly—Internal bomb rack outboard (LH front)	KC	1
	15-7951-4	Rail Assembly—Internal bomb rack outboard (RH front)	KC	1
	15-7951-13	Rail Assembly—Internal bomb rack outboard (LH front)	DP	1
	15-7951-14	Rail Assembly—Internal bomb rack outboard (RH front)	DP	1
	15-7951-9	Rail Assembly—Internal bomb rack outboard (LH rear)	E	1
	15-7951-10	Rail Assembly—Internal bomb rack outboard (RH rear)	E	1
	15-7951-12	Rail Assembly—Internal bomb rack outboard (LH rear)	ZE	1
	15-7951-11	Rail Assembly—Internal bomb rack outboard (RH rear)	ZE	1
2	15-7951-7	Rail (LH front)	All	1
	15-7951-8	Rail (RH front)	All	1
3	15-7951-5	Rail (LH rear)	All	1
	15-7951-6	Rail (RH rear)	All	1
4	1-17847-1	Hook Assembly—Bomb rack (LH front)	All	8
	1-17847	Hook Assembly—Bomb rack (RH front)	All	8
5	1-17847	Hook Assembly—Bomb rack (LH rear)	All	7
	1-17847-1	Hook Assembly—Bomb rack (RH rear)	All	7
6	1-21426	Hook Assembly—Bomb rack (LH rear)	All	1
	1-21426-1	Hook Assembly—Bomb rack (RH rear)	All	1
7	33A6182	Latch Assembly—Bomb rack (LH front)	All	8
	33A6182-1	Latch Assembly—Bomb rack (RH front)	All	8
8	33A6182-1	Latch Assembly—Bomb rack (LH rear)	All	8
	33A6182	Latch Assembly—Bomb rack (RH rear)	All	8
9	33A6186-1	Spring—Bomb rack hook (LH)	All	8
	33A6186	Spring—Bomb rack hook (RH)	All	8
10	1-17897	Spacer—Bomb rack hook (front)	All	8
	1-17897	Spacer—Bomb rack hook (rear)	All	7
11	1-20533	Spacer—Bomb rack hook (rear)	All	1
12	1-23570	Filler—2000 pound bomb hook (rear)	All	1
	1-23570-1	Filler—2000 pound bomb hook (rear)	All	1
13	15-7958	Plate Assembly—Shear (LH)	HA	1
	15-7958-1	Plate Assembly—Shear (RH)	HA	1
	15-7958-11	Plate Assembly—Shear (LH)	JI	1
	15-7958-12	Plate Assembly—Shear (RH)	JI	1
	1-20732	Installation—Bomb release socket	HA	NP
14	15-5008	Clip—Socket ring (Simmonds AEROcessories)	HA	1
15	6-10108	Bracket Assembly—Outboard bomb rack	All	2
16	AX5	Box—Auxiliary (P. R. Mallory)	HA	8
17	43B11200	Receptacle Assembly—Bomb release (Type A-1) GFE	JI	8
	9-3723	Installation—Bomb rack crank (LH outboard)	HA	NP
	9-3723-1	Installation—Bomb rack crank (RH outboard)	HA	NP
18	3-14665	Crank Assembly—Lever control (LH)	HA	1
	3-14665-1	Crank Assembly—Lever control (RH)	HA	1
	BC4W10	Bearing—Bell crank unit ball (Fafnir)	HA	1
19	3-14664	Link—Bomb control	HA	1
20	A313-3	Bushing—Oilite (Chrysler)	HA	1
21	3-14683	Bracket—Bomb release control	HA	1
	15-7953-11	Bar Assembly (LH)	HA	1
	15-7953-12	Bar Assembly (RH)	HA	1
22	14-2357	Bar—Bomb release (LH)	HA	1
	14-2357-2	Bar—Bomb release (RH)	HA	1
23	1-21379	Bell Crank Assembly—Bomb control (LH)	HA	8
	1-21379-2	Bell Crank Assembly—Bomb control (RH)	HA	8
	B55	Bearing (Torrington)	HA	1
24	1-21005	Bearing—Bomb control	HA	8
25	1-21099	Bearing Assembly—Bomb control	HA	8
	M451	Bearing (Torrington)	HA	1
26	1-20185	Support—Bomb release bar	HA	5
27	1-21032	Pad Assembly—Auxiliary fuel tank	UH	2
28	1-21031	Pad Assembly—Auxiliary fuel tank	UH	2
	1-18380-8-199	Washer	UH	8
	1-18536-8-199	Washer	UH	8
29	41G1742	Release—Bomb (Type A-2) GFE (see fig. 160)	HA	Ref
	41G1742-1	Release—Bomb (Type A-2) GFE (see fig. 160)	HA	Ref
	43G19840L	Release—Bomb (Type A-4) GFE (see fig. 160)	JI	Ref
	43G19840R	Release—Bomb (Type A-4) GFE (see fig. 160)	JI	Ref
30	33D5226	Shackle (Type B-7) GFE (see fig. 160)	T	Ref
	43D10157	Shackle (Type B-10) GFE (see fig. 160)	JG	Ref
	33D5226	Shackle (Type B-7) GFE (see fig. 160)	JG	Ref
	43D10157	Shackle (Type B-10) GFE (see fig. 160)	DM	Ref

PUBLISHED BY AVIALOGS.COM

FUSELAGE

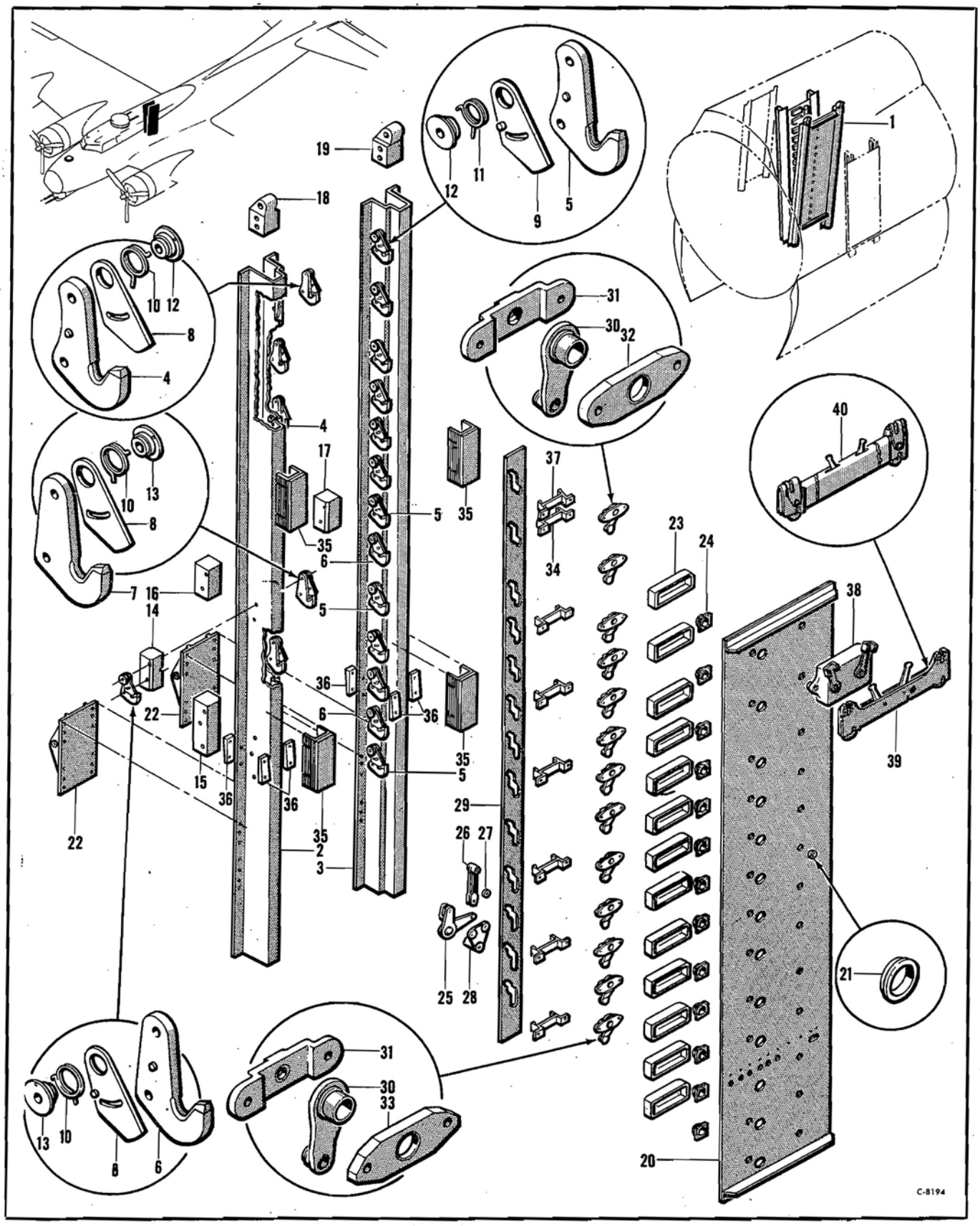

Figure 162—Inboard Internal Bomb Rack

RESTRICTED
PUBLISHED BY AVIALOGS.COM

FUSELAGE

Inboard Internal Bomb Rack

Figure & Index No.	Part Number	1 2 3 4 5 6 7 Nomenclature	Usage Code	Units Per Assy.
		Inboard Internal Bomb Rack		
	65-6806-3	Installation—Armament	All	NP
	15-7955	Installation—Bomb rack	All	NP
162-1	15-7954	Rack Assembly—Internal bomb inboard (LH)	HA	1
	15-7954-1	Rack Assembly—Internal bomb inboard (RH)	HA	1
	15-7954-17	Rack Assembly—Internal bomb inboard (LH)	DI	1
	15-7954-18	Rack Assembly—Internal bomb inboard (RH)	DI	1
	15-7954-21	Rack Assembly—Internal bomb inboard (LH)	DP	1
	15-7954-22	Rack Assembly—Internal bomb inboard (RH)	DP	1
	15-7952-3	Rail Assembly—Internal bomb rack inboard (LH front)	KC	1
	15-7952-4	Rail Assembly—Internal bomb rack inboard (RH front)	KC	1
	15-7952-27	Rail Assembly—Internal bomb rack inboard (LH front)	DP	1
	15-7952-28	Rail Assembly—Internal bomb rack inboard (RH front)	DP	1
	15-7952-21	Rail Assembly—Internal bomb rack inboard (LH rear)	All	1
	15-7952-22	Rail Assembly—Internal bomb rack inboard (RH rear)	All	1
2	15-7952-13	Rail (LH front)	All	1
	15-7952-14	Rail (RH front)	All	1
3	15-7952-12	Rail (Rear)	All	1
4	1-17847	Hook Assembly—Bomb rack (LH front)	All	12
	1-17847-1	Hook Assembly—Bomb rack (RH front)	All	12
5	1-17847-1	Hook Assembly—Bomb rack (LH rear)	All	11
	1-17847	Hook Assembly—Bomb rack (RH rear)	All	11
6	1-21426	Hook Assembly—Bomb rack (LH)	All	3
	1-21426-1	Hook Assembly—Bomb rack (RH)	All	3
7	1-21426-1	Hook Assembly—Bomb rack (LH front)	All	1
	1-21426	Hook Assembly—Bomb rack (RH front)	All	1
8	33A6182-1	Latch Assembly—Bomb rack (LH front)	All	14
	33A6182	Latch Assembly—Bomb rack (RH front)	All	14
9	33A6182	Latch Assembly—Bomb rack (LH rear)	All	13
	33A6182-1	Latch Assembly—Bomb rack (RH rear)	All	13
10	33A6186	Spring—Bomb rack hook (LH front)	All	14
	33A6186-1	Spring—Bomb rack hook (RH front)	All	14
11	33A6186-1	Spring—Bomb rack hook (LH rear)	All	13
	33A6186	Spring—Bomb rack hook (RH rear)	All	13
12	1-17897	Spacer—Bomb rack hook (front)	All	12
	1-17897	Spacer—Bomb rack hook (rear)	All	11
13	1-20533	Spacer—Bomb rack hook	All	2
14	3-14235	Filler—2000 pound bomb hook (LH front)	All	1
	3-14235-1	Filler—2000 pound bomb hook (RH front)	All	1
	3-14217	Spacer—2000 pound bomb hook (LH front)	All	1
	3-14217-1	Spacer—2000 pound bomb hook (RH front)	All	1
15	1-21454-2	Filler—Bomb rail (LH front)	All	1
	1-21454-3	Filler—Bomb rail (RH front)	All	1
16	1-21425	Filler—2000 pound bomb hook (LH front)	All	1
	1-21425-1	Filler—2000 pound bomb hook (RH front)	All	1
17	1-21425-1	Filler—2000 pound bomb hook (LH rear)	All	1
	1-21425	Filler—2000 pound bomb hook (RH rear)	All	1
18	3-14232-1	Terminal—Bomb rail (LH front)	All	1
	3-14232	Terminal—Bomb rail (RH front)	All	1
19	3-14232	Terminal—Bomb rail (LH rear)	All	1
	3-14232-1	Terminal—Bomb rail (RH rear)	All	1
20	15-7957	Plate Assembly—Shear (LH)	HA	1
	15-7957-1	Plate Assembly—Shear (RH)	HA	1
	15-7957-10	Plate Assembly—Shear (LH)	JI	1
	15-7957-11	Plate Assembly—Shear (RH)	JI	1
	1-20732	Installation—Bomb release socket	HA	NP
21	15-5008	Clip—Socket ring (Simmonds AEROcessories)	HA	1
22	6-10109	Bracket Assembly—Inboard bomb rack	All	2
23	AX5	Box—Auxiliary (P. R. Mallory)	HA	13
24	43B11200	Receptacle Assembly—Bomb release (Type A-1) GFE	JI	13
	9-3721	Installation—Inboard bomb rack crank (LH)	HA	NP
	9-3721-1	Installation—Inboard bomb rack crank (RH)	HA	NP
25	3-14679	Crank Assembly—Control (LH)	HA	1
	3-14679-1	Crank Assembly—Control (RH)	HA	1
	BC4W10	Bearing—Bell crank unit ball	HA	1
26	3-14664	Link—Bomb control	HA	1
27	A313-3	Bushing—Oilite (Chrysler)	HA	1
28	3-14660	Bracket—Bomb release	HA	1
	15-7954-15	Bar Assembly (LH)	HA	1
	15-7954-16	Bar Assembly (RH)	HA	1
29	14-2357-8	Bar—Bomb release (LH)	HA	1
	14-2357-9	Bar—Bomb release (LH)	HA	1
30	1-21379-2	Bell Crank Assembly—Bomb control (LH)	HA	13
	1-21379	Bell Crank Assembly—Bomb control (RH)	HA	13
	B55	Bearing (Torrington)	HA	1
31	1-21099	Bearing Assembly—Bomb control	HA	13
	M451	Bearing (Torrington)	HA	1
32	1-21005	Bearing—Bomb control	HA	12
33	1-21005-1	Bearing—Bomb control	HA	1
34	1-20185	Support—Bomb release bar	HA	7
35	1-21031	Pad Assembly—Auxiliary fuel tank	UH	4
	1-18380-8-199	Washer	UH	8
	1-18536-8-199	Washer	UH	8
36	1-21034	Filler—Bomb rail	All	8
37	1-26432	Support—Bomb release bar	HA	1
38	41G1742	Release—Bomb (Type A-2) GFE (see fig. 160)	HA	Ref
	41G1742-1	Release—Bomb (Type A-2) GFE (see fig. 160)	HA	Ref
	43G19840L	Release—Bomb (Type A-4) GFE (see fig. 160)	JI	Ref
	43G19840R	Release—Bomb (Type A-4) GFE (see fig. 160)	JI	Ref
39	33D5226	Shackle (Type B-7) GFE (see fig. 160)	T	Ref
	43D10157	Shackle (Type B-10) GFE (see fig. 160)	JG	Ref
	33D5226	Shackle (Type B-7) GFE (see fig. 160)	JG	Ref
	43D10157	Shackle (Type B-10) GFE (see fig. 160)	DM	Ref
40	41E4555	Shackle (Type D-6) GFE (see fig. 160)	All	Ref

PUBLISHED BY AVIALOGS.COM

FUSELAGE

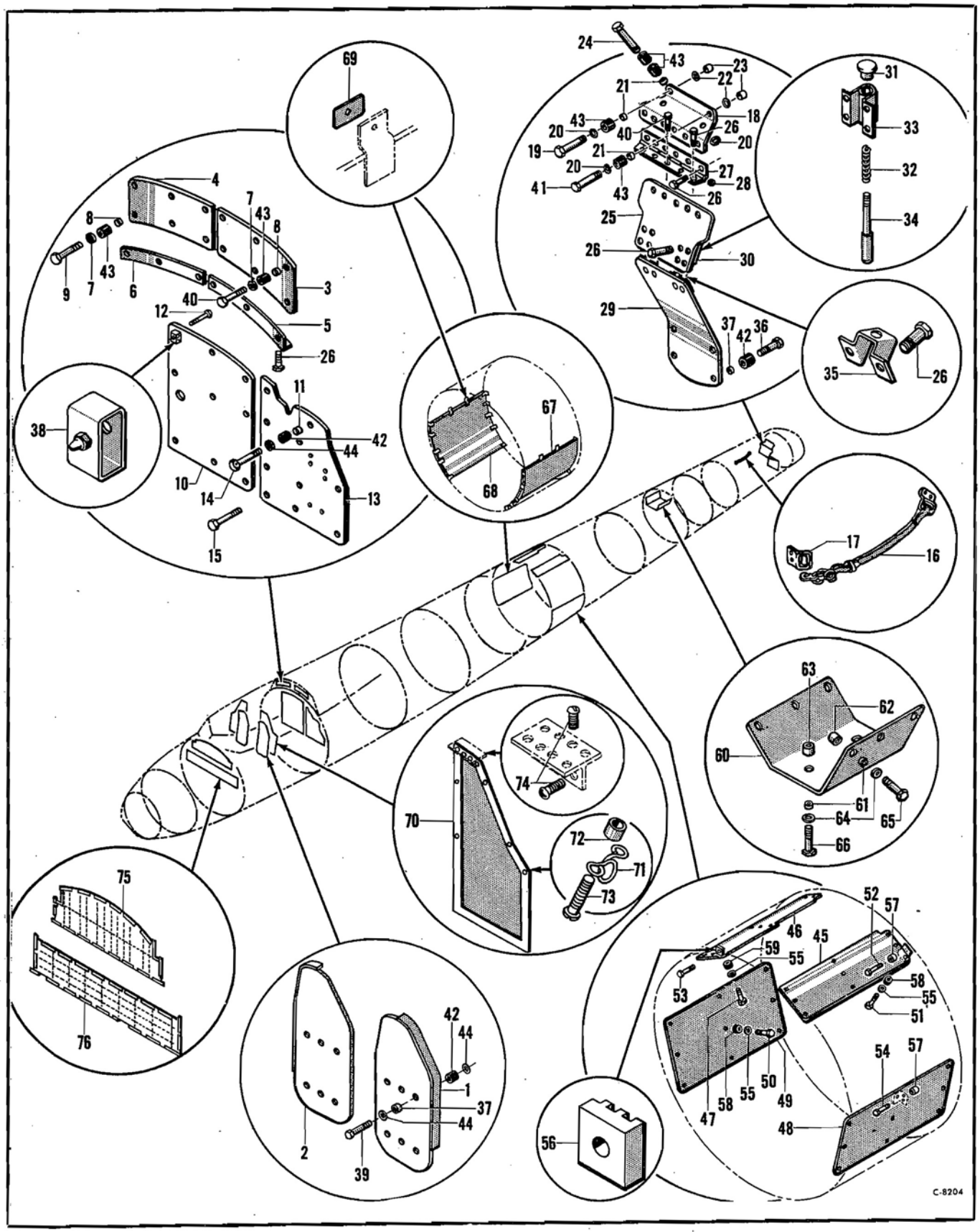

Figure 163—Protective Armor

PUBLISHED BY AVIALOGS.COM

FUSELAGE

Protective Armor

Figure & Index No.	Part Number	1 2 3 4 5 6 7 Nomenclature	Usage Code	Units Per Assy.
		Protective Armor		
	65-7387	Installation—Armor plate	VC	NP
163-1	6-11597	Armor Assembly—Seat back (LH)	T	1
2	6-11597-1	Armor Assembly—Seat back (RH)	T	1
	6-11597-20	Armor Assembly—Seat back (LH)	MG	1
	6-11597-21	Armor Assembly—Seat back (RH)	MG	1
3	3-15152	Plate—Top gunner armor (LH)	VC	1
4	3-15152-1	Plate—Top gunner armor (RH)	VC	1
5	6-9285	Angle Assembly—Armor attachment (LH)	VC	1
6	6-9285-1	Angle Assembly—Armor attachment (RH)	VC	1
	1-18356	Plate Assembly—Armor attachment	VC	3
7	BAC1909-3	Washer—Oversize	VC	24
8	BAC1554-51-27	Spacer—Armor plate	VC	24
9	AN3-20A	Bolt—Aircraft	VC	6
10	6-10769	Door—Bulkhead 4 armor plate	VC	1
11	BAC1554-63-27	Spacer—Armor plate	VC	15
12	AN4-21A	Bolt—Aircraft	VC	9
13	6-10783-1	Armor Assembly—Top gunner	N	1
	6-10768	Armor—Top gunner	N	1
14	AN4-42A	Bolt—Aircraft	N	4
15	AN4-43A	Bolt—Aircraft	N	2
	9-3640	Installation—Armor support strap	PB	NP
16	9-3640-1	Strap Assembly	PB	1
17	1-18519	Hanger—Strap support	PB	2
18	3-13546-1	Plate—Rear gunner armor	PB	1
19	AN3-17A	Bolt—Aircraft	VC	2
20	BAC1909-13	Washer—Oversize	VC	5
21	BAC1554-51-30	Spacer—Armor plate	PB	4
22	1-22986-3	Washer—1-16 rubber	VC	2
23	BAC1603-24	Spacer—Number 10 bolt	VC	2
24	AN3-15A	Bolt—Aircraft	VC	2
25	3-13545-3	Plate Assembly—Rear gunner	PB	1
26	AN3-6A	Bolt—Aircraft	PB	23
27	65-7387-511	Hinge	EA	1
	65-7387-510	Hinge	QH	1
28	1-30401	Washer—.032 steel	EA	1
29	3-13544	Plate—Rear gunner armor	PB	1
30	1-18452	Latch Assembly—Armor plate	PB	2
31	1-16322	Knob—Gun mount-lock	PB	1
32	1-16326	Spring—Compression	PB	1
33	1-18450	Cylinder Assembly—Armor plate lock	PB	1
34	1-16321-1	Pin—Gun mount-lock	PB	1
35	1-18451	Striker—Armor plate lock	PB	2
36	AN4-13A	Bolt—Aircraft	PB	4
37	BAC1554-63-30	Spacer—Armor plate	PB	4
38	3-19058	Stud Assembly—Door catch	VC	1
39	AN4-14A	Bolt—Aircraft	VC	12
40	AN3-13A	Bolt—Aircraft	VC	6
41	AN3-20A	Bolt—Aircraft	VC	2
42	1-18298	Buffer—Armor plate	VC	31
43	1-18298-1	Buffer—Armor plate	VC	18
44	BAC1909-4	Washer—Oversize	VC	57
	15-9472	Installation—Side guns armor	OA	NP
45	3-16152	Armor—Side gun (LH)	OA	1
46	3-16151	Armor—Side gun (RH)	OA	1
47	AN4-10A	Bolt—Aircraft (RH)	OA	2
48	3-16147	Armor—Side gun (LH)	OA	1
49	3-16147-1	Armor—Side gun (RH)	OA	1
50	AN4-12A	Bolt—Aircraft	OA	7
51	AN4-11A	Bolt—Aircraft	OA	21
52	AN3-4A	Bolt—Aircraft	OA	48
53	AN3-13A	Bolt—Aircraft	OA	8
54	AN3-5A	Bolt—Aircraft	OA	4
55	BAC1909-4	Washer—Oversize	OA	30
56	1-24941-1	Spacer	OA	4
57	BAC1604-8	Spacer—1-4 bolt	OA	4
58	BAC1555-5	Buffer—Armor plate	OA	28
59	BAC1555-3	Buffer—Armor plate	OA	2
	15-9293	Installation—Bulkhead 8 armor	T	NP
60	6-11311	Armor—Bulkhead 8	T	1
61	1-24247-1	Spacer—Armor plate	T	8
62	1-18298-17	Buffer—Armor plate	T	6
63	1-18298-18	Buffer—Armor plate	T	2
64	BAC1909-3	Washer—Oversize	T	8
65	AN3-11A	Bolt—Aircraft	T	6
66	AN3-12A	Bolt—Aircraft	T	2
	15-11924	Installation—LH waist gun armor	KJ	NP
	15-11925	Installation—RH waist gun armor	KJ	NP
67	15-11926-8	Armor Assembly—LH waist gun armor	KJ	1
68	15-11927-7	Armor Assembly—RH waist gun armor	KJ	1
69	1-28845	Shim—Waist gun armor	KJ	AR
	15-17028	Installation—Pilots flak curtain	AQ	NP
70	15-17001	Curtain Assembly—Pilots flak	AQ	2
	6-20319	Plate—Flak curtain	AQ	21
	6-20319-1	Plate—Flak curtain half	AQ	2
71	3-29969	Clip—Flak curtain	AQ	2
72	BAC1603-20	Spacer—Number 10 bolt	AQ	4
73	AN520-10R14	Screw—Round head	AQ	4
74	AN520-10R10	Screw—Round head	AQ	20
	15-17035	Installation—Bulkhead 3 flak curtain	PP	NP
75	8-3252	Curtain Assembly—Bulkhead 3 flak	PP	1
	6-20319	Plate—Flak curtain	PP	26
76	8-3250	Curtain Assembly—Bulkhead 3 flak	PP	1
	6-20319	Plate—Flak curtain	PP	32
	6-20319-1	Plate—Flak curtain half	PP	4

PUBLISHED BY AVIALOGS.COM

FUSELAGE

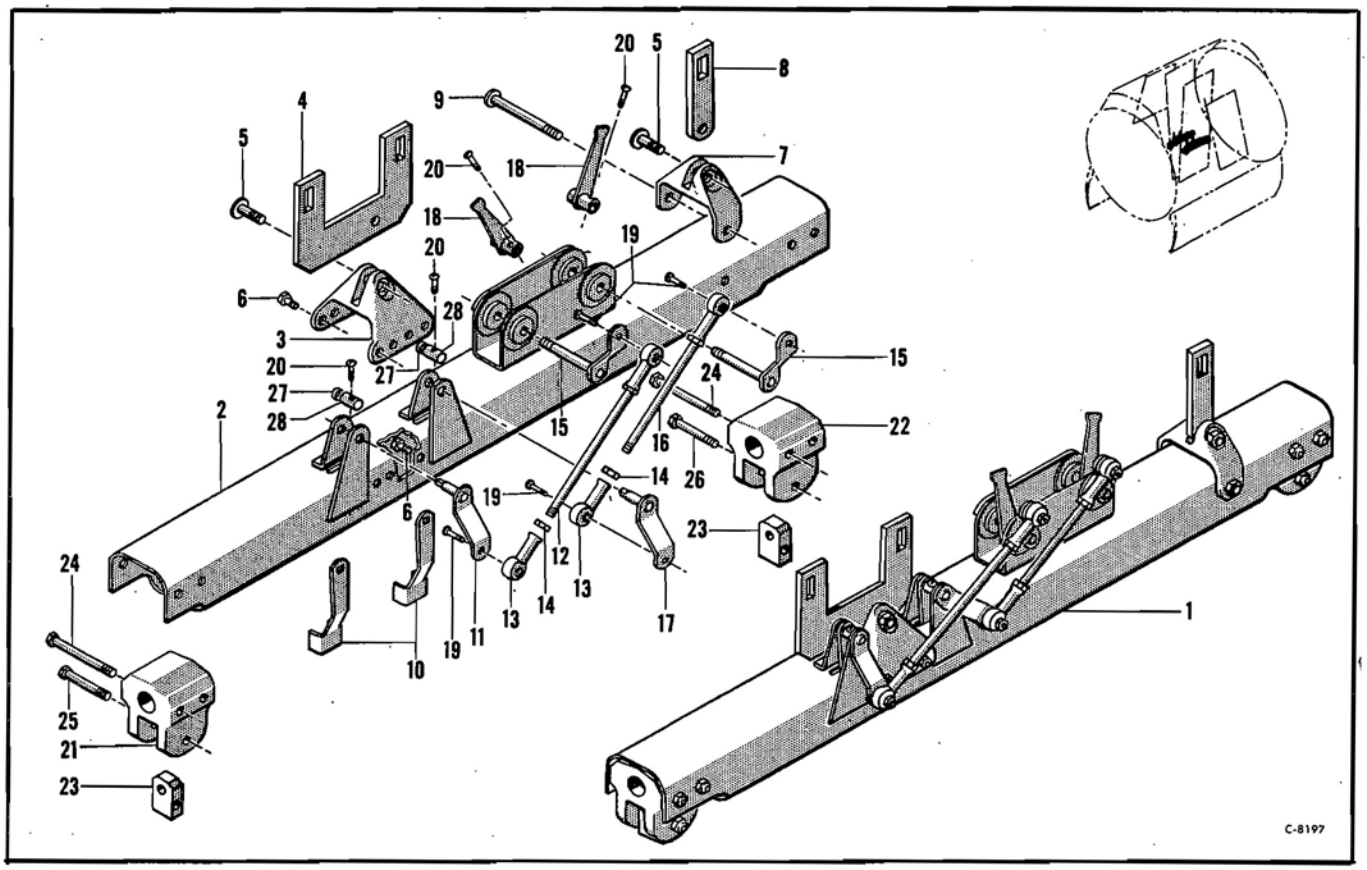

Figure 164—D6 Bomb Shackle Adapter

D6 Bomb Shackle Adapter

Figure & Index No.	Part Number	1 2 3 4 5 6 7 Nomenclature	Usage Code	Units Per Assy.
	15-7781	Installation—D6 bomb shackle adapter (LH) (see fig. 160)	All	NP
	15-7781-1	Installation—D6 bomb shackle adapter (RH) (see fig. 160)	All	NP
164-1	15-7781-2	Adapter Assembly (LH)	OA	1
	15-7781-3	Adapter Assembly (RH)	OA	1
	15-7781-6	Adapter Assembly (LH)	KJ	1
	15-7781-7	Adapter Assembly (RH)	KJ	1
2	15-7781-4	Tube Assembly (LH)	All	1
	15-7781-5	Tube Assembly (RH)	All	1
	1-19995	Bracket Assembly—Shackle adapter	All	1
	21-9212	Bearing Assembly—Control	All	1
	AN201K6A	Bearing—Metal shielded ball	All	1
3	51-274	Fitting—Shackle adapter	All	1
4	41-16	Link—Shackle adapter	All	1
5	AN26-14	Bolt—Clevis	All	2
6	AN4-5A	Bolt—Aircraft	All	8
7	51-276	Fitting—Shackle adapter	All	1
8	21-9233	Link—Shackle adapter	All	1
9	AN26-52	Bolt—Clevis	All	1
10	1-19844	Lever—Flanged	OA	2
	3-26181	Lever—Bomb shackle	KJ	2
11	1-19857-1	Crank Assembly—Shackle adapter (LH)	All	1
	1-19857-3	Crank Assembly—Shackle adapter (RH)	All	1
12	41-484-6-6	Rod Assembly—1-4 in. control	All	1
	REB3N	End—Rod (Fafnir)	All	1
	AN316-4R	Nut—Aircraft check	All	1
13	REB3N	End—Rod (Fafnir)	All	2
14	AN316-4R	Nut—Aircraft check	All	2
15	1-19060	Shaft Assembly—Shackle adapter	All	2
16	41-484-6-1	Rod Assembly—1-4 in. control	All	1
	REB3N	End—Rod (Fafnir)	All	1
	AN316-4R	Nut—Aircraft check	All	1
17	1-19857-2	Crank Assembly—Shackle adapter (LH)	All	1
	1-19857-4	Crank Assembly—Shackle adapter (RH)	All	1
18	1-19069	Lever Assembly—Shackle adapter	All	2
19	AN23-13	Bolt—Clevis	All	4
20	AN23-13A	Bolt—Clevis	All	4
21	3-13937-2	Terminal—Shackle adapter	All	1
22	3-13937-1	Termnial—Shackle adapter	All	1
23	1-18982	Spacer Assembly—Shackle adapter	All	2
24	AN-32A	Bolt—Aircraft	All	4
25	AN6-22A	Bolt—Aircraft	All	1
26	AN6-21A	Bolt—Aircraft	All	1
27	BAC1606-8	Spacer—Number 10 bolt	All	2
28	BAC1606-38	Spacer—Number 10 bolt	All	2

PUBLISHED BY AVIALOGS.COM

ALIGHTING GEAR

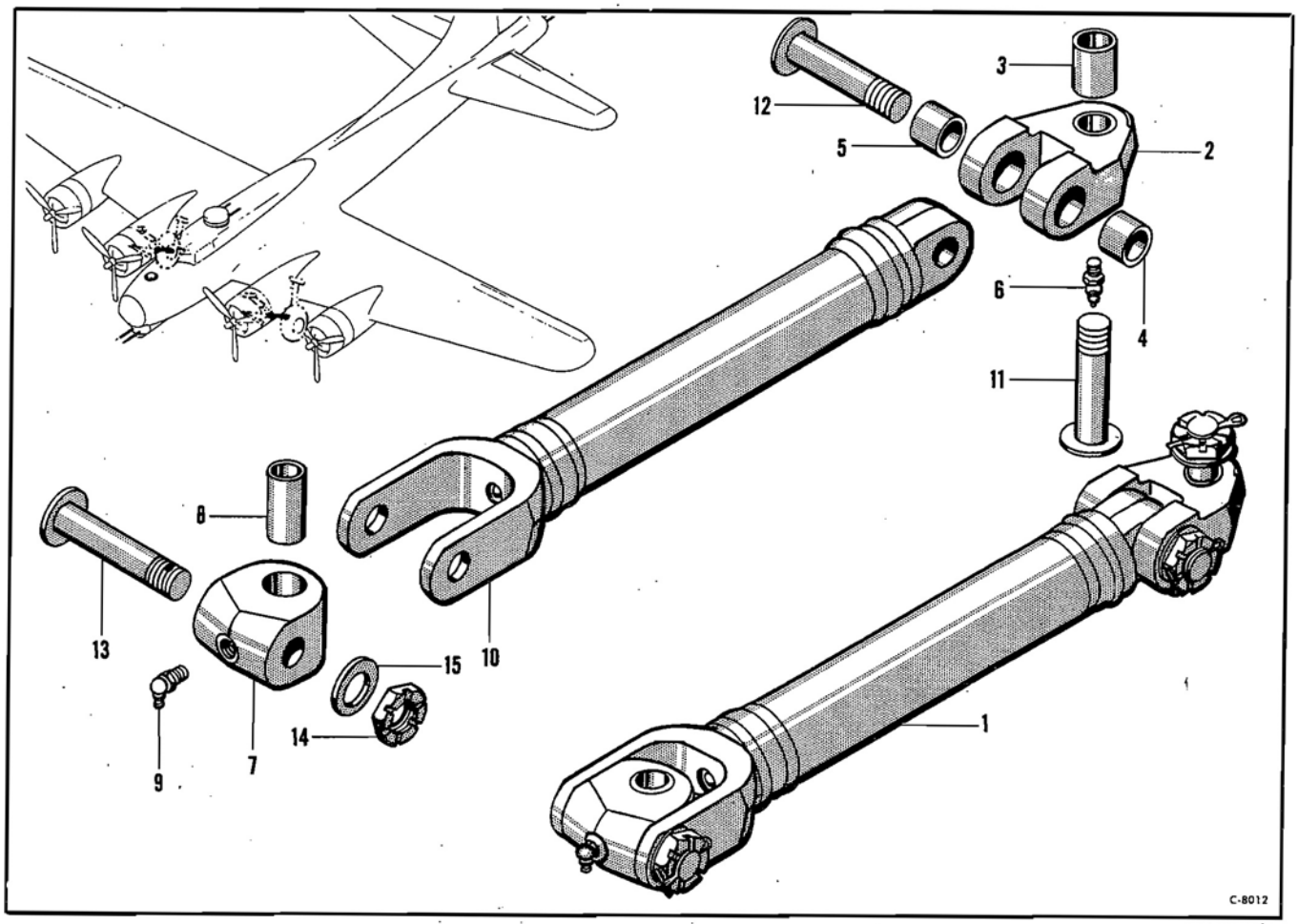

Figure 165—Universal Drag Link Assembly

Universal Drag Link Assembly

Figure & Index No.	*Part Number*	*1 2 3 4 5 6 7 Nomenclature*	*Usage Code*	*Units Per Assy.*
165-1	ALG100006-10	Link Assembly—Universal drag (A. O. Smith) (see fig. 166)	FA	Ref
	9-6861	Link Assembly—Universal drag (see fig. 166)	RH	Ref
	ALG206A	Universal Assembly—Drag strut (A. O. Smith)	FA	1
	3-11760	Universal Assembly—Drag strut	RH	1
2	ALG206	Terminal (A. O. Smith)	FA	1
	3-11760-1	Terminal	RH	1
3	ALG207	Bushing (A. O. Smith)	FA	1
	3-11760-2	Bushing	RH	1
4	ALG262-10	Bushing—Landing gear universal (A. O. Smith)	FA	1
	3-27807	Bushing—Landing gear universal	RH	1
5	ALG262-20	Bushing—Landing gear universal (A. O. Smith)	FA	1
	3-27807-1	Bushing—Landing gear universal	RH	1
6	AN286-3	Lubricator—Pressure-grip type PT	All	1
	ALG252A	Universal Assembly—Drag strut (A. O. Smith)	FA	1
	3-25153	Universal Assembly—Drag strut	RH	1
7	ALG252	Universal (A. O. Smith)	FA	1
	3-25153-1	Universal	RH	1
8	ALG239	Bushing (A. O. Smith)	FA	1
	3-25153-2	Bushing	RH	1
9	AN286-4	Lubricator—Pressure-grip type PT	All	1
10	ALG437A	Link Assembly—Drag strut (A. O. Smith)	FA	1
	6-16811	Link Assembly—Drag strut	RH	1
	AN535-14-8	Screw—Round head drive	All	2
11	AN34-54	Bolt—Clevis	All	1
12	AN34-56	Bolt—Clevis	All	1
13	AN34-50	Bolt—Clevis	FA	1
	AN34-62	Bolt—Clevis	RH	1
14	AN960-1416	Washer—Plain	All	3
15	AN320-14	Nut—Aircraft shear	All	3

PUBLISHED BY AVIALOGS.COM

ALIGHTING GEAR

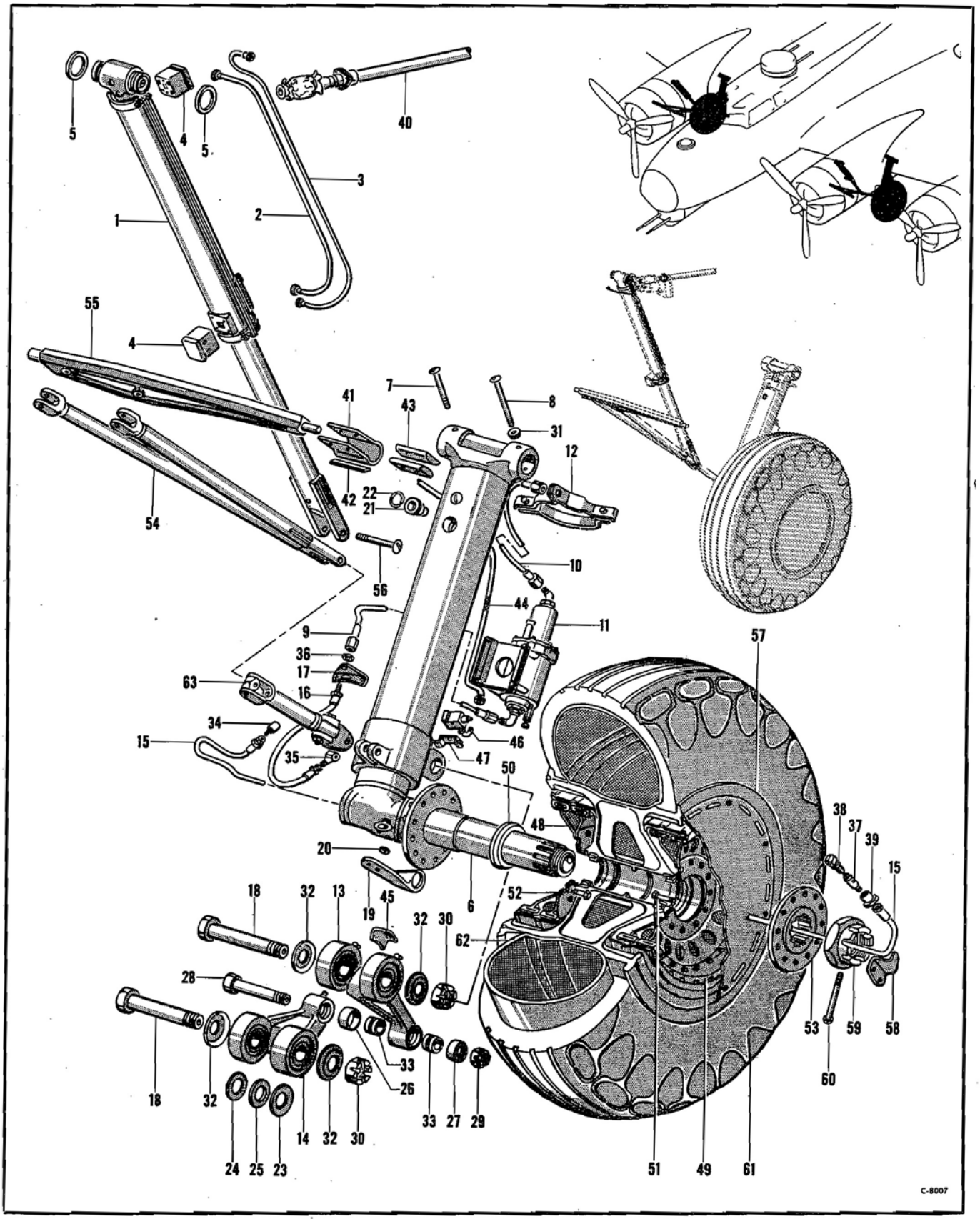

Figure 166—Landing Gear and Brakes

PUBLISHED BY AVIALOGS.COM

ALIGHTING GEAR

Landing Gear and Brakes

Figure & Index No.	Part Number	1 2 3 4 5 6 7 Nomenclature	Usage Code	Units Per Assy.
	15-10414	Installation—Landing gear and brakes	All	NP
166-1	75-4801-620	Mechanism Assembly—Retracting gear (LH)	ED	1
	75-4801-621	Mechanism Assembly—Retracting gear (RH)	ED	1
	64-1498-504	Mechanism Assembly—Retracting gear LH (see fig. 168)	All	1
	64-1498-505	Mechanism Assembly—Retracting gear RH (see fig. 168)	All	1
2	75-4801-612	Conduit Assembly—Flexible (LH)	ED	1
	75-4801-616	Conduit Assembly—Flexible (RH)	ED	1
3	75-4801-613	Conduit Assembly—Flexible (LH)	ED	1
	75-4801-617	Conduit Assembly—Flexible (RH)	ED	1
	3-11999-5	Installation—Upper limit switch (LH)	ED	NP
	3-11999-6	Installation—Upper limit switch (RH)	ED	NP
	3-12000-4	Installation—Lower limit switch	ED	NP
4	3-11996-15	Shield Assembly—Upper limit switch	ED	1
	8909K520	Switch (Cutler-Hammer)	ED	1
5	1-30665	Shim—Landing gear	GG	2
	15-10414-14	Shim—Landing gear	T	2
	15-10414-27	Strut Assembly—LH	All	1
	15-10414-28	Strut Assembly—RH	All	1
6	15-10414-5	Strut Assembly—Landing gear LH (see fig. 167)	All	1
	15-10414-6	Strut Assembly—Landing gear RH (see fig. 167)	All	1
7	AN29-66	Bolt—Clevis	All	1
8	AN29-86	Bolt—Clevis	All	1
9	15-10414-12	Tube Assembly—LH	All	1
	15-10414-13	Tube Assembly—RH	All	1
10	15-10414-24	Tube Assembly—LH	All	1
	15-10414-25	Tube Assembly—RH	All	1
11	15-10414-26	Valve Assembly—Return (see fig. 170)	All	1
	AN4H4	Bolt—Aircraft	All	4
12	6-8533	Clamp Assembly—Landing gear strut	All	1
13	9-2312-6	Link Assembly—Torsion	All	1
	532A	Cup—Bearing (Timken)	All	2
	542	Cone—Bearing (Timken)	All	2
14	9-2312-7	Link Assembly—Torsion	All	1
	532A	Cup—Bearing (Timken)	All	2
	542	Cone—Bearing (Timken)	All	2
15	AN6260-8D45	Hose Assembly—Detachable end swivel fittings type	VB	1
	AN6260-8D45 1-2	Hose Assembly—Detachable end swivel fitting stype	KN	1
16	AN6261-8D22	Hose Assembly—Detachable end fittings type	All	1
17	1-27724	Angle—Brake hose support	All	1
18	3-7833	Bolt—Special	All	2
19	3-10298	Lug—Towing	All	1
20	21-9588-10	Washer	All	1
21	21-556-1	Guard—Valve dust	All	1
22	21-557	Ring—Valve dust guard	All	1
23	1-22934-5	Washer	All	4
24	AN960B2616	Washer—Brass	All	4
25	AN960A2616	Washer—Aluminum alloy	All	4
26	21-9388	Ring—Grease seal	All	1
27	21-9389-1	Cap—Grease seal	All	1
28	21-9391	Bolt—Special	All	1
29	21-9414	Nut—Special	All	1
30	21-9415	Nut—Special	All	2
31	21-9588-12	Washer	All	1
32	41-671	Washer	All	4
33	N1807	Bearing—Thrust (Fafnir)	All	2
34	AN776-8D	Elbow—90 degree universal	All	1
35	AN778-8D	Elbow—45 degree universal	All	1
36	AN924-8D	Nut—Flared tube bulkhead and universal fitting	All	1
37	AN6221-8	Coupling—Hydraulic self sealing half	All	1
38	AN6222-8	Coupling—Hydraulic self sealing half	All	1
39	AN6224-8	Nut—Hydraulic self sealing coupling	All	1
40	55-5593	Installation—Hand retracting control LH (see fig. 169)	All	NP
	55-5593-1	Installation—Hand retracting control RH (see fig. 169)	All	NP
	9-7265	Installation—Wheel stop (LH)	PK	NP
	9-7265-1	Installation—Wheel stop (RH)	PK	NP
	9-7265-6	Belt Assembly	PK	1
41	9-7265-3	Belt	PK	1
42	3-29449	Plate—Scuffing	PK	3
43	9-7265-5	Spacer—Wood	PK	2
	15-13885	Installation—Landing gear safety switch	DK	NP
44	15-13885-1	Conduit Assembly	DK	1
45	3-26048	Lug—Safety switch	DK	1
46	3-26172	Switch—Landing gear safety	DK	1
47	3-28720	Bracket	DK	1
48	H2-258-1	Brake Assembly—Inboard (Hayes Industries) GFE	All	2
49	H2-259-1	Brake Assembly—Outboard (Hayes Industries) GFE	All	2
50	3-19267	Ring—Spacer	All	2
51	AN10-12	Bolt—Aircraft	All	24
52	AN10-13	Bolt—Aircraft	All	24
53	AOS1040	Flange—Outer torque (A. O. Smith)	All	2
54	ALG100005-20	Strut Assembly—Drag (A. O. Smith)	EB	2
	ALG100005-21	Strut Assembly—Drag (A. O. Smith)	LL	2
55	8-588-2	Support—Drag strut	XA	2
	8-588-3	Support—Drag strut	MK	2
	8-588-8	Support—Drag strut	LL	2
56	AN34-82	Bolt—Clevis	All	2
57	H3-101M	Wheel Assembly—Landing (Hayes Industries) GFE	All	2
58	3-27965	Stop—Hydraulic swivel	IL	2
59	AN7502-55	Nut—Wheel bearing retaining	All	2
60	NAS221-15	Screw—Brazier head Phillips recess	All	4
61	NO NUMBER	Tire—56 in. (Spec AN-C55 Type 1) GFE	All	2
62	NO NUMBER	Tube—56 in. (Spec AF26546 Type 1A) GFE	All	2
63	ALG100006-10	Universal Assembly—Drag link (A. O. Smith) (see fig. 165)	FA	2
	9-6861	Universal Assembly—Drag link (see fig. 165)	RH	2

PUBLISHED BY AVIALOGS.COM

ALIGHTING GEAR

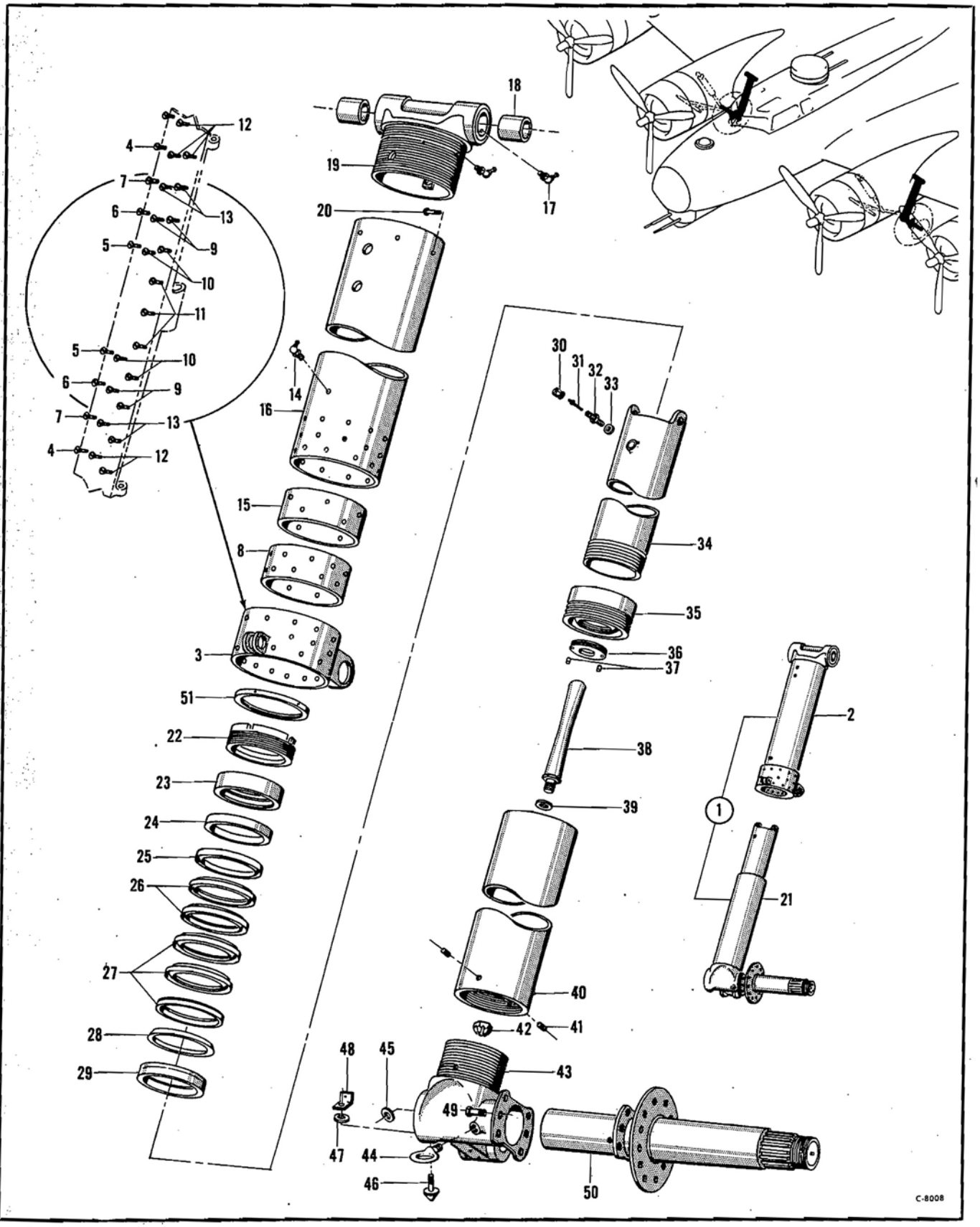

Figure 167—Landing Gear Strut Assembly

PUBLISHED BY AVIALOGS.COM

ALIGHTING GEAR

Landing Gear Strut Assembly

Figure & Index No.	Part Number	1 2 3 4 5 6 7 Nomenclature	Usage Code	Units Per Assy.
167-1	15-10414-5	Strut Assembly—Landing gear LH (see fig. 166)	All	Ref
	15-10414-6	Strut Assembly—Landing gear RH (see fig. 166)	All	Ref
2	55-4803-421	Strut Assembly—Landing gear LH	All	1
	55-4803-422	Strut Assembly—Landing gear RH	All	1
3	55-4803-415	Collar Assembly—Landing gear	All	1
4	41-9623-12	Bolt—Clevis	All	3
5	41-9623-15	Bolt—Clevis	All	2
6	41-9623-14	Bolt—Clevis	All	2
7	41-9623-13	Bolt—Clevis	All	2
	AN320-6	Nut—Aircraft shear	All	29
8	55-4803-3	Bushing	All	1
9	41-2636-16	Screw—Special	All	4
10	41-2636-17	Screw—Special	All	4
11	41-2636-18	Screw—Special	All	3
12	41-2636-14	Screw—Special	All	5
13	41-2636-15	Screw—Special	All	4
14	AN286-2	Lubricator—Pressure-grip type PT	All	1
15	55-4803-425	Bushing	All	1
16	55-4803-423	Tube—Strut assembly LH	All	1
	55-4803-424	Tube—Strut assembly RH	All	1
	15-4779	Terminal Assembly—Landing gear strut	All	1
17	AN286-3	Lubricator—Pressure-grip type PT	All	2
18	15-4779-2	Bushing—Terminal assembly	All	2
19	15-4779-1	Terminal	All	1
20	AN27-16	Bolt—Clevis	All	8
	AN320-7	Nut—Aircraft shear	All	8
21	14-3287	Oleo Assembly—Landing gear LH	All	1
	14-3287-1	Oleo Assembly—Landing gear RH	All	1
22	43-9165	Nut Assembly—Oleo packing	All	1
23	41-2567	Ring—Upper	All	1
24	42B498-12	Ring—Packing filler	All	1
25	39B226-12	Ring—Packing upper adapter	All	1
26	43B2237-12	Ring—"V" packing	All	2
27	40B629-12	Ring—"V" hydraulic packing	All	3
28	39B223-12	Ring—Packing lower adapter	All	1
29	41-2568	Ring—Lower	All	1
30	AN813-1	Cap—High pressure air valve	All	1
31	AN809-1	Core—High pressure air valve	All	1
32	AN812-1	Body—High pressure air valve	All	1
33	AN901-5C	Gasket—Metal tube connection seal	All	1
	46-5857	Piston Assembly—Oleo	All	1
34	81-2564	Rod Assembly—Oleo piston	All	1
35	81-2565	Piston—Oleo piston	All	1
36	21-9083	Plate—Orifice	All	1
37	AN565D8-4	Screw—Headless set machine	All	2
38	41-2569	Rod—Orifice	All	1
39	14-3287-2	Washer	All	1
40	3-9164	Cylinder Assembly—Oleo	All	1
41	895-101	Fitting—Pipe	All	2
42	AN310-16	Nut—Aircraft castle	All	1
43	15-6181	Knuckle—Landing gear LH	All	1
	15-6181-1	Knuckle—Landing gear RH	All	1
44	41-8199-1	Lug—Towing	All	1
	AN310-10	Nut—Aircraft castle	All	7
45	21-9588-6	Washer	All	1
46	61-9396-2	Bolt—Jacking cone	All	1
	AN310-8	Nut—Aircraft castle	All	1
47	21-9588-7	Washer	All	1
48	1-27728	Support	All	1
49	AN10-13	Bolt—Aircraft	All	6
50	AOS1-1031	Axle—Landing gear (A. O. Smith)	All	1
51	21-9084	Nut—Packing lock	All	1

PUBLISHED BY AVIALOGS.COM

ALIGHTING GEAR

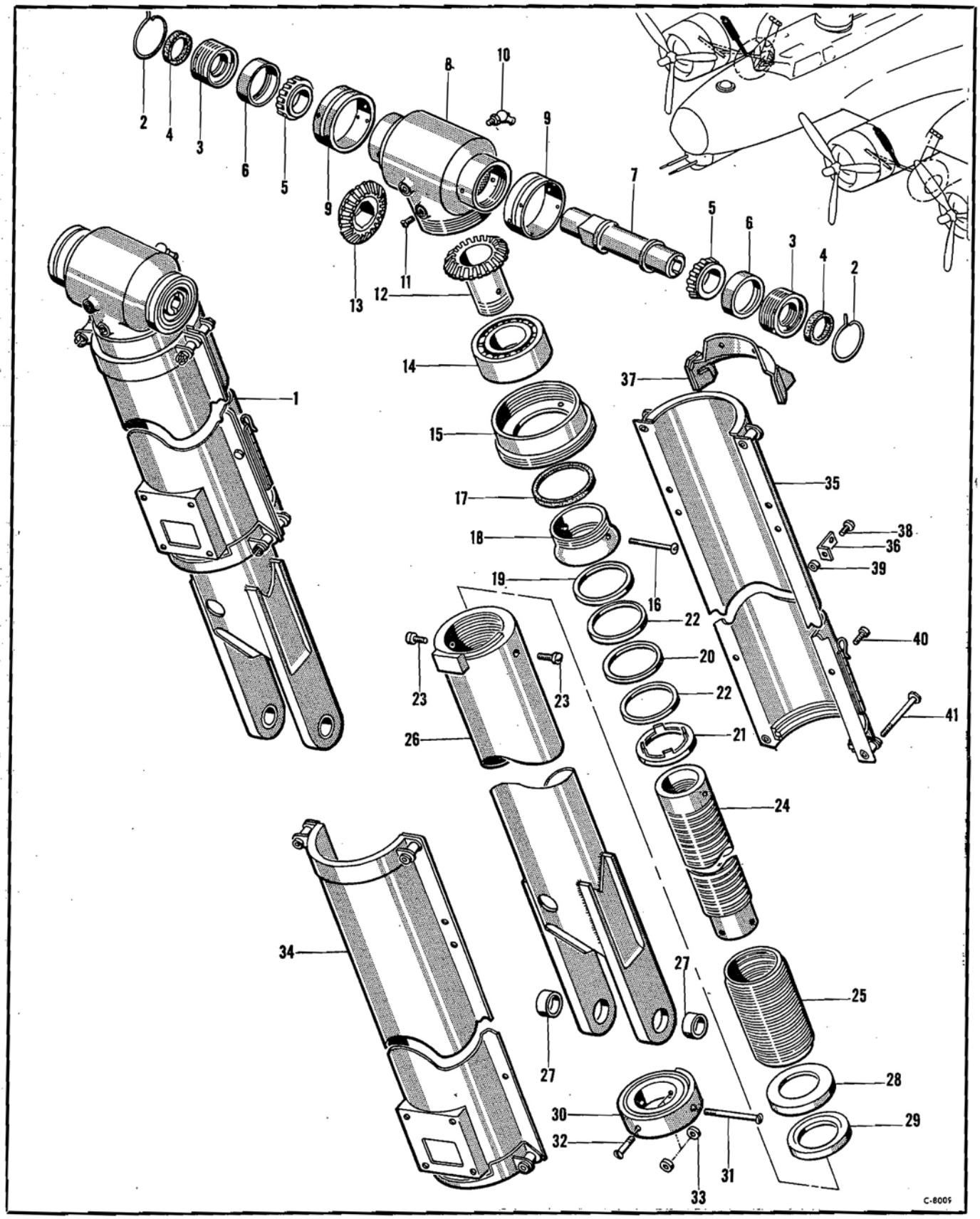

Figure 168—Retracting Gear Mechanism Assembly

PUBLISHED BY AVIALOGS.COM

ALIGHTING GEAR

Retracting Gear Mechanism Assembly

Figure & Index No.	Part Number	1 2 3 4 5 6 7 Nomenclature	Usage Code	Units Per Assy.
168-1	64-1498-504	Mechanism Assembly—Retracting gear (LH) (see fig. 166)	All	Ref
	64-1498-505	Mechanism Assembly—Retracting gear (RH) (see fig. 166)	All	Ref
2	41-4778	Ring—Lock	All	2
	41-2817	Retaining Assembly—Retracting gear housing	All	2
3	41-2817-1	Retainer	All	1
4	41-2817-2	Gasket—Felt	All	1
5	07100	Cone (Timken)	All	2
6	07196	Cup (Timken)	All	2
7	AOS1-505	Tube and Shaft Assembly (A. O. Smith)	All	1
	46-8053	Housing Assembly—Retracting gear	All	1
8	46-8053-400	Housing Assembly	All	1
9	51-289	Bushing	All	2
10	AN286-3	Lubricator—Pressure-grip type PT	All	1
11	AN913-1S	Fitting—Pipe	All	1
	3-9288	Gear—Set	All	1
12	*3-9288-1	Gear—20 degree involute	All	1
13	*3-9288-2	Gear—20 degree involute	All	1
14	5208	Bearing (Fafnir)	All	1
15	21-5136	Cap—Retracting gear housing	All	1
16	AN24-40	Bolt—Clevis	All	1
	21-9839	Stop Assembly—Retracting screw upper	All	1
17	21-9839-3	Felt	All	1
18	21-9838	Stop—Upper	All	1
19	21-9839-4	Washer	All	1
20	21-9839-2	Bumper	All	1
21	21-9839-1	Cap—Free fit	All	1
22	41-1066-64-108	Washer	All	2
23	AN502-416-8	Screw—Drilled fillister head	All	2
24	3-15118	Screw—Landing gear retracting	All	1
25	3-15124	Nut—Retracting gear	All	1
	48-591	Tube Assembly—Retracting nut	All	1
26	48-591-401	Tube Assembly—Weld	All	1
27	51-428	Bushing	All	2
28	21-9841	Cap—Lower bumper	All	1
29	64-1498-502	Bumper	All	1
30	3-21937	Stop Assembly—Retracting screw lower	All	1
31	AN24-42	Bolt—Clevis	All	1
	AN320-4	Nut—Aircraft shear	All	1
32	AN24-13A	Bolt—Clevis	All	2
33	21-9588	Washer—Ball seat	All	2
	AN364-428	Nut—Self-locking thin	All	3
34	9-3082-2	Cover Assembly—Retracting screw	All	1
35	9-3082-1	Cover Assembly—Retracting screw	All	1
	9-3082-28	Door	All	1
	AN415-4	Pin—Lock	All	1
36	1-18740	Angle—Conduit support	All	3
37	3-20433	Cover Assembly—Lock	All	1
38	AN520-10R10	Screw—Round head	All	2
39	BAC1603-8	Spacer	All	2
	AN365-1032	Nut—Self-locking	All	10
40	AN501-10-6	Screw—Fillister head drilled	All	9
41	AN4-20	Bolt—Aircraft	All	4
	AN310-4	Nut—Aircraft castle	All	4

*Must be procured in sets.

PUBLISHED BY AVIALOGS.COM

ALIGHTING GEAR

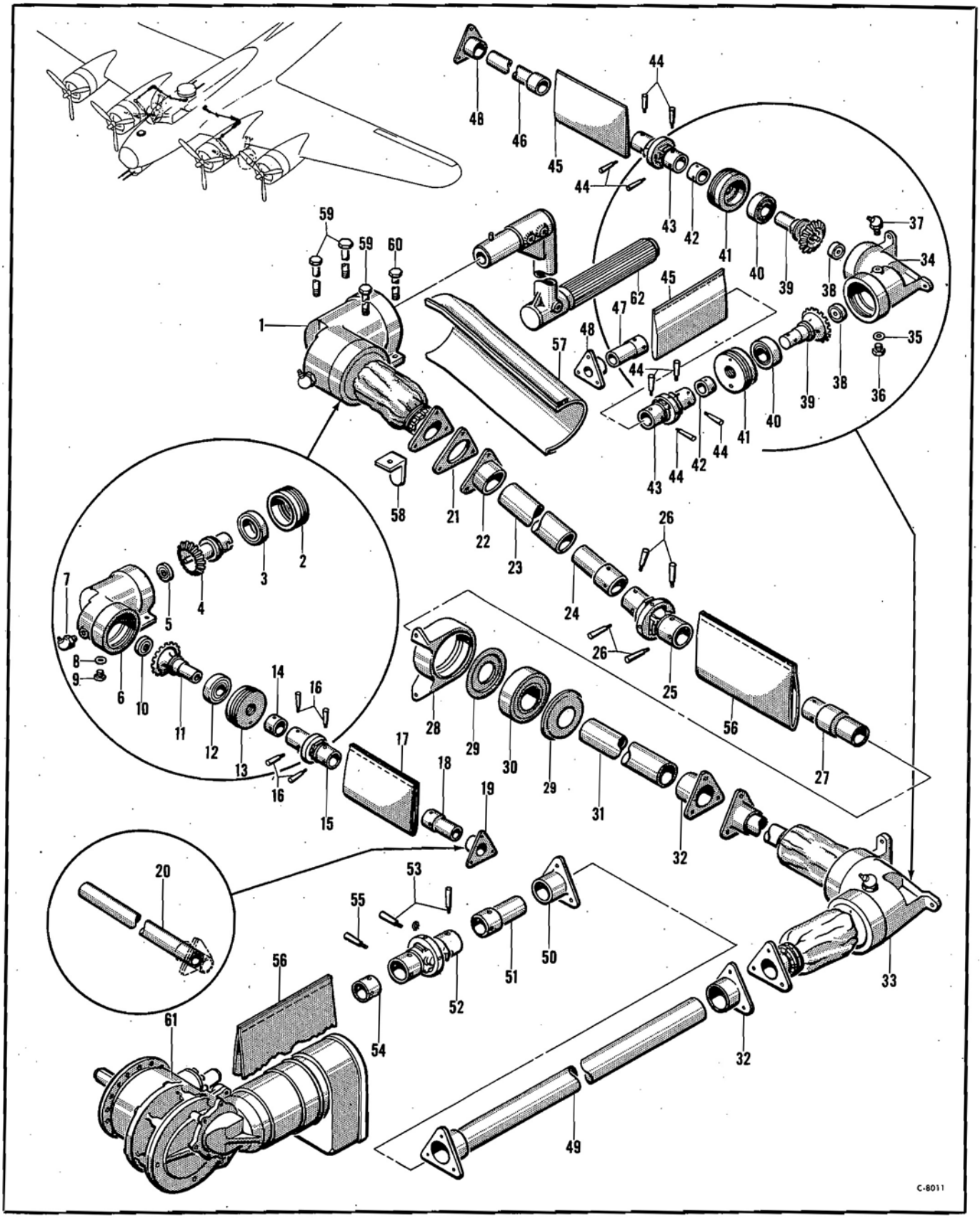

Figure 169—Landing Gear Hand Retracting Control

RESTRICTED
PUBLISHED BY AVIALOGS.COM

ALIGHTING GEAR

Landing Gear Hand Retracting Control

Figure & Index No.	Part Number	1 2 3 4 5 6 7 Nomenclature	Usage Code	Units Per Assy.
		Landing Gear Hand Retracting Control		
	55-5593	Installation—Landing gear hand retracting control (LH) (see fig. 166)	All	NP
	55-5593-1	Installation—Landing gear hand retracting control (RH) (see fig. 166)	All	NP
169-1	55-5593-405	Box Assembly—Gear (LH)	GB	1
	55-5593-410	Box Assembly—Gear (LH)	PL	1
	55-5593-406	Box Assembly—Gear (RH)	GB	1
	55-5593-411	Box Assembly—Gear (RH)	PL	1
2	21-6948	Retainer Assembly—Hand retracting mechanism	All	1
3	AN200K5	Bearing—Heavy duty metal shield	All	1
4	21-8440	Gear	All	1
5	S12K	Bearing (Fafnir) (Fafnir S12FT, Federal S12, or Federal S12R optional)	All	1
6	53-6989	Housing (LH)	All	1
	53-6989-1	Housing (RH)	All	1
7	AN286-3	Fitting—Lubricator pressure-grip type PT	All	1
8	AN900-6	Gasket—Copper annular	All	1
9	905-6	Plug—Drilled hex	All	1
10	S10K	Bearing (Fafnir) (Fafnir S10FT, Federal S10, or Federal S10R optional)	All	1
11	21-6867	Gear	All	1
12	AN200K4	Bearing—Heavy duty metal shield	All	1
13	21-6948-3	Retainer Assembly—Hand retracting mechanism	All	1
14	51-498-1	Filler	All	1
15	2700-20	Joint—Universal (Apex)	GB	1
	44B6541	Joint—Universal	PL	1
16	AN386-1-10	Pin—Threaded taper	All	4
	21-9751-20	Installation—Boot	GB	NP
17	3-24498-502	Boot Assembly—Universal grease	GB	1
18	41-43	Insert	All	1
19	41-4220-1	Coupling	GB	1
20	55-5593-12	Tube	PL	1
21	1-23504	Shim	All	AR
	1-23504-1	Shim	All	AR
	1-23504-2	Shim	All	AR
	1-23504-3	Shim	All	AR
	55-5593-407	Tube Assembly	GB	1
	55-5593-409	Tube Assembly	PL	1
22	41-4220	Coupling	All	1
	41-4220-1	Coupling	PL	1
23	55-5593-12	Tube	GB	1
24	41-43	Insert	All	1
25	2700-20	Joint—Universal (Apex)	GB	1
	44B6541	Joint—Universal	PL	1
26	AN386-1-10	Pin—Threaded taper	All	4
27	51-720	Insert—Adapter	All	1
	55-5593-8	Support Assembly	All	1
28	21-6926	Support	All	1
29	21-6947-1	Retainer	All	2
30	1206	Bearing (SKF)	All	1
31	55-5593-19	Tube	All	1
32	41-4220	Coupling	All	2
33	55-5593-401	Box Assembly—Gear (LH)	All	1
	55-5593-402	Box Assembly—Gear (RH)	All	1
34	43-6988	Housing (LH)	All	1
	43-6988-1	Housing (RH)	All	1
35	905-6	Plug—Drilled hex	All	1
36	AN900-6	Gasket—Copper annular	All	1
37	AN286-4	Fitting—Lubricator pressure-grip type PT	All	1
38	S10K	Bearing (Fafnir) (Fafnir S10FT, Federal S10, or Federal S10R optional)	All	2
39	21-6867	Gear	All	2
40	AN200K4	Bearing—Heavy duty metal shield	All	2
41	21-6948-3	Retainer Assembly	All	2
42	51-498-1	Filler	All	2
43	2700-20	Joint—Universal (Apex)	GB	2
	44B6541	Joint—Universal	PL	2
44	AN386-1-10	Pin—Threaded taper	All	4
	21-9751-20	Installation—Boot	GB	NP
45	3-24498-502	Boot Assembly—Universal grease	GB	1
46	41-43-2	Insert	All	1
47	41-43	Insert	All	1
48	41-4220-1	Coupling	All	2
49	55-5593-403	Tube Assembly	All	1
	55-5593-408	Coupling Assembly	All	1
50	41-4220-1	Coupling	All	1
51	41-43	Insert	All	1
52	2700-20	Joint—Universal (Apex)	GB	1
	44B6541	Joint—Universal	PL	1
53	AN386-1-10	Pin—Threaded taper	All	2
54	51-498	Filler	All	1
55	AN386-2-10	Pin—Threaded taper	All	1
	21-9751-20	Installation—Boot	GB	NP
56	3-24498-502	Boot Assembly—Universal grease	GB	1
57	3-11370-4	Cover Assembly (LH)	All	1
	3-11370	Cover Assembly (RH)	All	1
58	41-782	Angle	All	1
59	NAS54A34	Bolt—Close tolerance	All	3
60	NAS54A35	Bolt—Close tolerance	All	1
61	15-6345	Installation—LG retracting motor (LH) (see fig. 45)	All	NP
	15-6345-1	Installation—LG retracting motor (RH) (see fig. 45)	All	NP
62	AN4098-1	Crank—Inertia starter hand (see fig. 69)	All	Ref

PUBLISHED BY AVIALOGS.COM

ALIGHTING GEAR

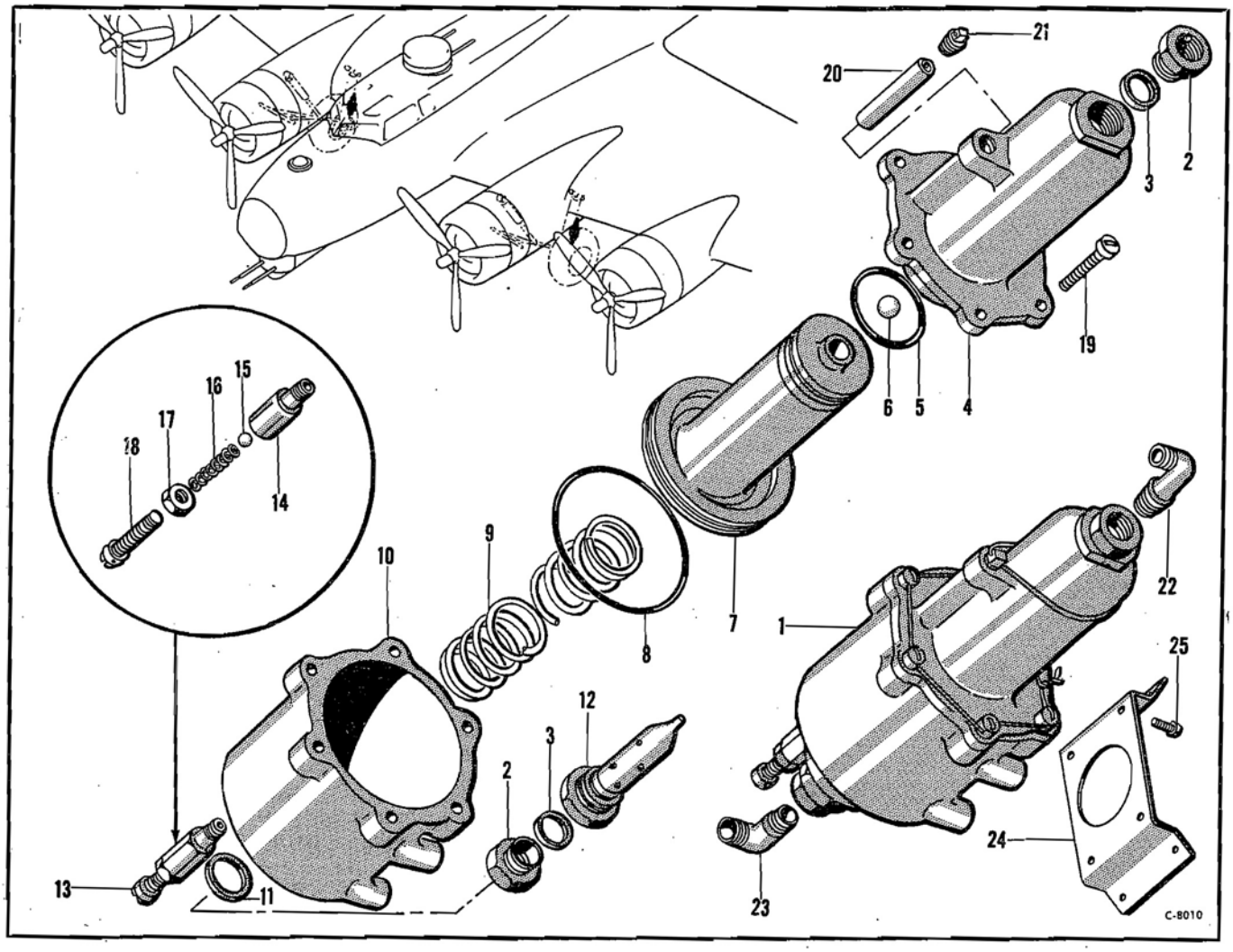

Figure 170—Brake Return Valve Assembly

Brake Return Valve Assembly

Figure & Index No.	Part Number	1 2 3 4 5 6 7 Nomenclature	Usage Code	Units Per Assy.
	15-10414-26	Valve Assembly—Brake return (see fig. 166)	All	Ref
170-1	9-7207	Valve Assembly—Brake return	All	1
2	1-29962	Adapter—Return boost	All	2
3	AN902-10	Gasket—Flared tube universal fitting	All	2
4	8-2654	Cylinder—Return boost	All	1
5	AN6227-32	Packing—"O" ring hydraulic	All	1
6	9-7207-1	Ball	All	1
7	9-5611	Piston—Return boost	All	1
8	AN6227-49	Packing—"O" ring hydraulic	All	1
9	1-28115	Spring—Compression	All	1
10	8-2653	Body—Return boost	All	1
11	AN902-20	Gasket—Flared tube universal fitting	All	1
12	3-19753	Tube Assembly—Return boost	All	1
13	3-19982	Valve Assembly—Deboost relief	All	1
14	3-19982-1	Body	All	1
15	3-19982-2	Ball	All	1
16	1-27735	Spring—Compression	All	1
17	AN316-6L	Nut—Aircraft check	All	1
18	AN501A616-20	Screw—Fillister head	All	1
19	AN503-516-24	Screw—Aircraft fillister head	All	6
20	9-7207-2	Filter—Saran	All	1
21	AN913-2	Plug—Pipe thread square head	All	1
22	811CT8	Fitting—Solderless	All	1
23	AN822-8	Elbow—90 degree	All	1
24	3-20110	Bracket—Return boost	All	1
25	AN500A416-8	Screw—Fillister head	All	4

RESTRICTED
PUBLISHED BY AVIALOGS.COM

ALIGHTING GEAR

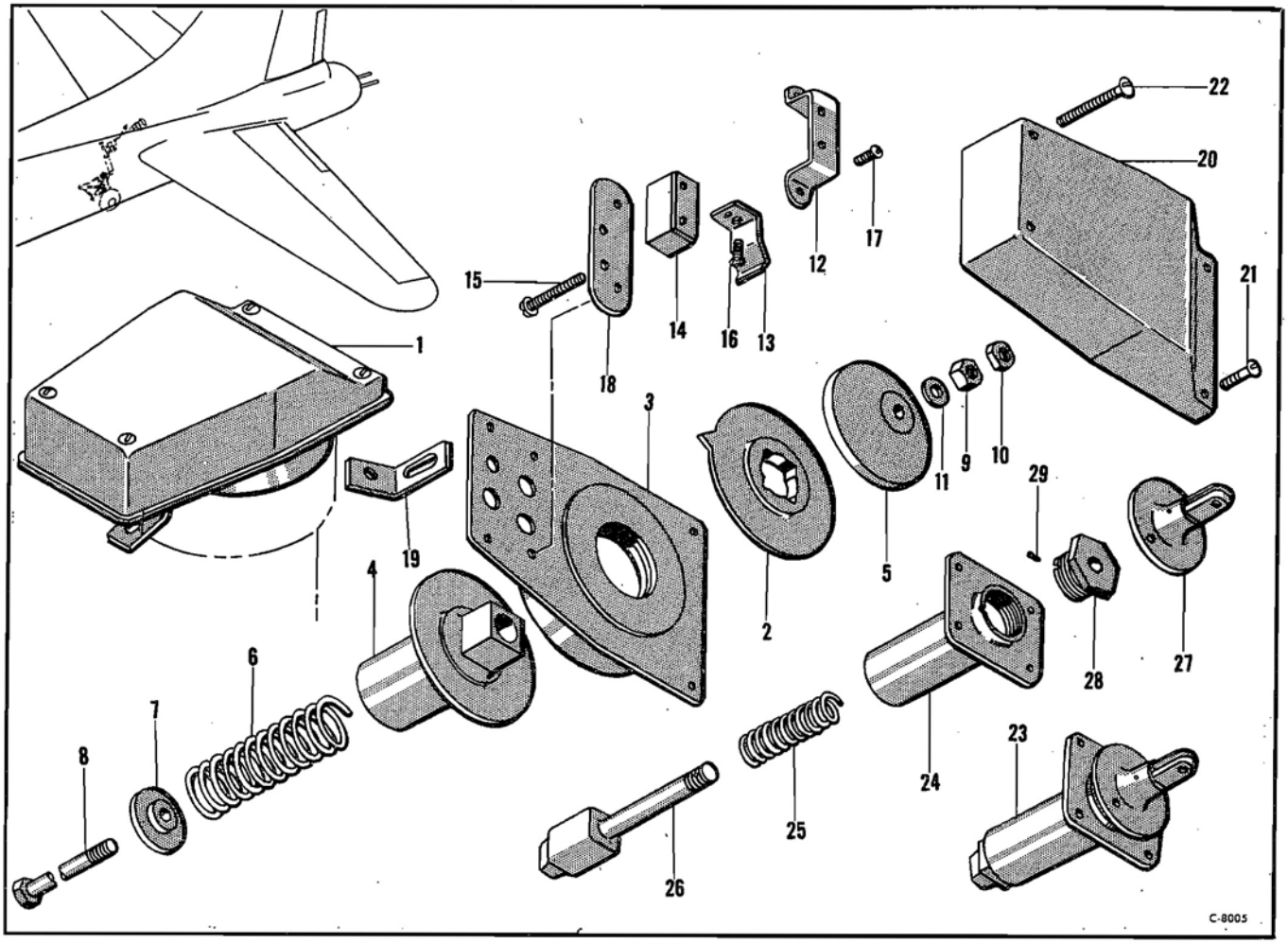

Figure 171—Tail Gear Brake and Lock Assemblies

Tail Gear Brake and Lock Assemblies

Figure & Index No.	Part Number	1 2 3 4 5 6 7 Nomenclature	Usage Code	Units Per Assy.
		Tail Gear Brake and Lock Assemblies		
171-1	55-7470-408	Brake Assembly (see fig. 172)	All	Ref
	6-9281	Brake Assembly—Tail wheel	All	1
2	1-18077	Disc Assembly—Tail wheel brake	All	1
3	3-12988	Disc Assembly—Tail wheel brake	All	1
4	41-3727-3	Disc Assembly—Tail wheel brake	All	1
5	1-18715	Washer—Compression spring	All	1
6	21-8444	Spring—Compression	All	1
7	41-3824-1	Retainer—Tail wheel spring	All	1
8	6-9281-1	Bolt (make from AN5-40A)	All	1
9	AN315-5R	Nut—Aircraft plain	All	1
10	AN316-5R	Nut—Aircraft check	All	1
11	AN960-516	Washer—Plain	All	1
	6-9356	Installation—Tail wheel center switch	All	NP
	6-9356-1	Spring Assembly	All	1
12	1-18643	Channel—Switch	All	1
13	1-18644	Spring—Switch	All	1
14	G-R	Switch (Micro Switch)	All	1
15	AN526-632R16	Screw—Truss head	All	2
16	AN515-6R6	Screw—Round head coarse thread	All	1
	AN365-632	Nut—Self-locking	All	3
17	AN520-10R7	Screw—Round head fine thread	All	2
	AN365-1032	Nut—Self-locking	All	2
18	1-18642	Plate—Cover	All	1
19	1-18433	Keeper—Brake Assembly	All	1
20	6-8952	Cover—Tail wheel brake	All	1
21	AN520-10R14	Screw—Round head fine thread	All	2
22	AN520-10R32	Screw—Round head fine thread	All	2
	AN365-1032	Nut—Self-locking	All	4
23	3-10080-2	Lock Assembly—Tail wheel (see fig. 172)	QG	Ref
24	41-3413	Sleeve Assembly—Tail wheel lock	QG	1
25	21-7829	Spring—Compression	QG	1
26	41-3412	Pin—Tail wheel lock	QG	1
27	41-9807	Terminal—Tail wheel lock	QG	1
28	81-3414	Nut—Tail wheel lock	QG	1
29	AN565D8-3	Screw—Headless set machine	QG	1

PUBLISHED BY AVIALOGS.COM

ALIGHTING GEAR

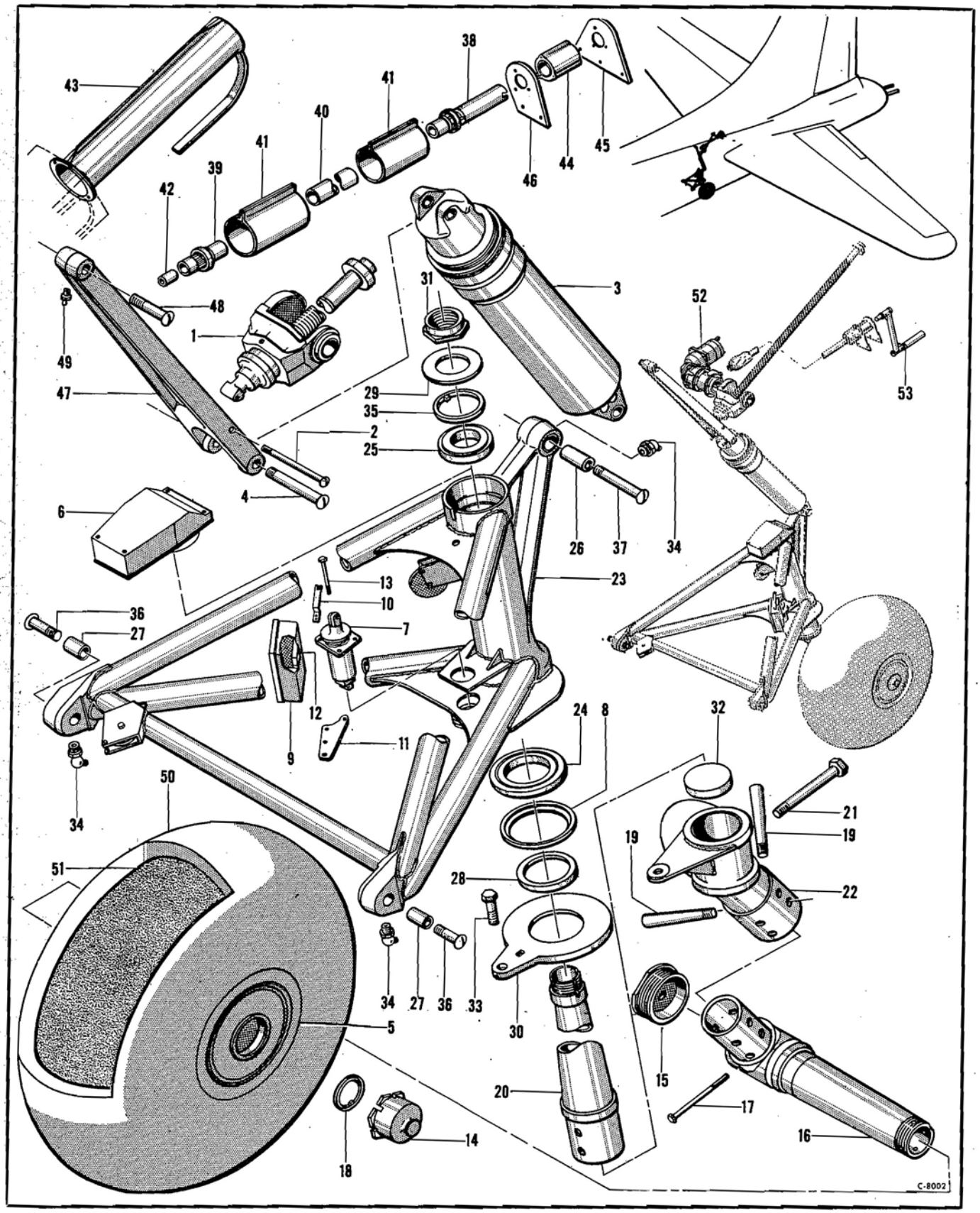

Figure 172—Tail Gear

PUBLISHED BY AVIALOGS.COM

ALIGHTING GEAR

Tail Gear

Figure & Index No.	Part Number	1 2 3 4 5 6 7 Nomenclature	Usage Code	Units Per Assy.
		Tail Gear		
	55-7470	Installation—Tail gear	All	NP
172-1	69-1787	Retracting Assembly—Tail gear (see fig. 174)	W	1
	69-1787-13	Retracting Assembly—Tail gear (see fig. 175)	QG	1
2	AN25-78	Bolt—Clevis	All	1
	AN320-5	Nut—Aircraft shear	All	1
3	8-1285	Oleo Assembly—Tail gear (see fig. 173)	All	1
4	AN32-86	Bolt—Clevis	All	1
	AN320-12	Nut—Aircraft shear	All	1
5	G3-217A	Wheel Assembly—Tail GFE	All	1
	55-7470-403	Treadle Assembly	All	1
6	55-7470-408	Brake Assembly (see fig. 171)	All	1
7	3-10080-2	Lock Assembly—Tail wheel (see fig. 171)	QG	1
8	3-13655	Retainer Assembly—Grease	All	1
	6-9355	Installation—Tail wheel lock switch	All	NP
	6-9355-1	Shield Assembly	All	1
9	3-13371	Shield Assembly	All	1
10	1-18597	Spring—Locking switch	All	1
11	1-18609-1	Plate—Locking switch	All	1
12	R-RS	Switch (Micro Switch Corp.)	All	1
13	21-6092-45-31	Bolt	All	1
	15-7369	Knuckle and Axle Assembly—Tail wheel	All	1
14	1-18075	Terminal—Tail wheel axle	All	1
15	1-18076	Terminal—Tail wheel axle	All	1
16	6-8945	Axle—Tail wheel	AC	1
	6-8945-2	Axle—Tail wheel	LO	1
17	AN3-40	Bolt—Aircraft	All	1
	AN310-3	Nut—Aircraft castle	All	1
18	AN7503-3	Washer—Wheel bearing retaining	All	1
19	AN386-7-27	Pin—Threaded taper	All	4
	AN320-8	Nut—Aircraft shear	All	4
20	6-8959	Spindle—Tail wheel	All	1
21	NAS60-43-5	Bolt—Close tolerance	All	2
	AN310-10	Nut—Aircraft castle	All	2
22	9-3428	Knuckle Assembly—Tail wheel	All	1
	15-7389	Treadle Assembly—Tail gear	All	1
23	15-7389-1	Treadle Assembly	All	1
24	34306	Cone—Bearing (Timken)	All	1
	34478	Cup—Bearing (Timken)	All	1
25	368	Cone—Bearing (Timken)	All	1
	362A	Cup—Bearing (Timken)	All	1
26	15-7389-19	Bushing	All	1
27	15-7389-20	Bushing	All	2
28	1-18095	Spacer—Tail wheel spindle	All	1
29	1-18097	Guard—Bearing	All	1
30	3-13006	Ring—Tail wheel lock	All	1
31	15-7470-3	Nut	All	1
32	15-7470-7	Plug	All	1
33	AN8DD13	Bolt—Aircraft	All	1
	AN310D8	Nut—Aircraft castle	All	1
34	AN286-3	Fitting—Lubricator pressure-grip type PT	All	3
35	AN7503-2	Washer—Wheel bearing retaining	All	1
36	AN32-40	Bolt—Clevis	All	2
37	AN32-62	Bolt—Clevis	All	1
	AN320-12	Nut—Aircraft shear	All	3
	55-7470-402	Tube Assembly	All	1
38	3-14954	Coupling Assembly—Tail gear mechanism	All	1
	BAC1851-16	Joint—Universal	GB	1
	44B6540-3	Joint—Universal	PL	1
39	BAC1851-16	Joint—Universal	GB	1
	44B6540	Joint—Universal	PL	1
40	15-7470-15	Tube	All	1
	21-9751-16	Installation—Universal grease boot	GB	NP
41	3-24498-2	Boot Assembly—Universal grease	GB	2
42	1-18776	Filler—Tail gear hand retracting	All	1
	15-11308	Installation—Tail wheel retracting screw cover	QG	NP
43	9-6022	Cover Assembly—Tail wheel retracting screw	QG	1
44	3-14953	Housing Assembly—Tail gear hand retracting mech	All	1
	A1521	Bearing (Chrysler Corp.)	All	2
45	3-15190	Bracket—Tail gear retractor	E	1
	3-25189	Bracket—Tail gear retractor	ZE	1
46	3-15190-1	Bracket—Tail gear retractor	E	1
	3-25189-1	Bracket—Tail gear retractor	ZE	1
47	15-7378	Yoke—Tail wheel	All	1
48	AN32-64	Bolt—Clevis	All	1
49	AN286-1	Fitting—Lubricator pressure-grip type PT	All	1
50	NO NUMBER	Tire—26 in. (Spec AN-C-55 Type 1)	All	1
51	NO NUMBER	Tube—26 in. smooth contour (Spec 26550)	All	1
52	55-7622	Installation—Tail gear retracting motor (see fig. 115)	All	NP
53	AN4098-1	Crank—Inertia starter hand (see fig. 69)	All	Ref

PUBLISHED BY AVIALOGS.COM

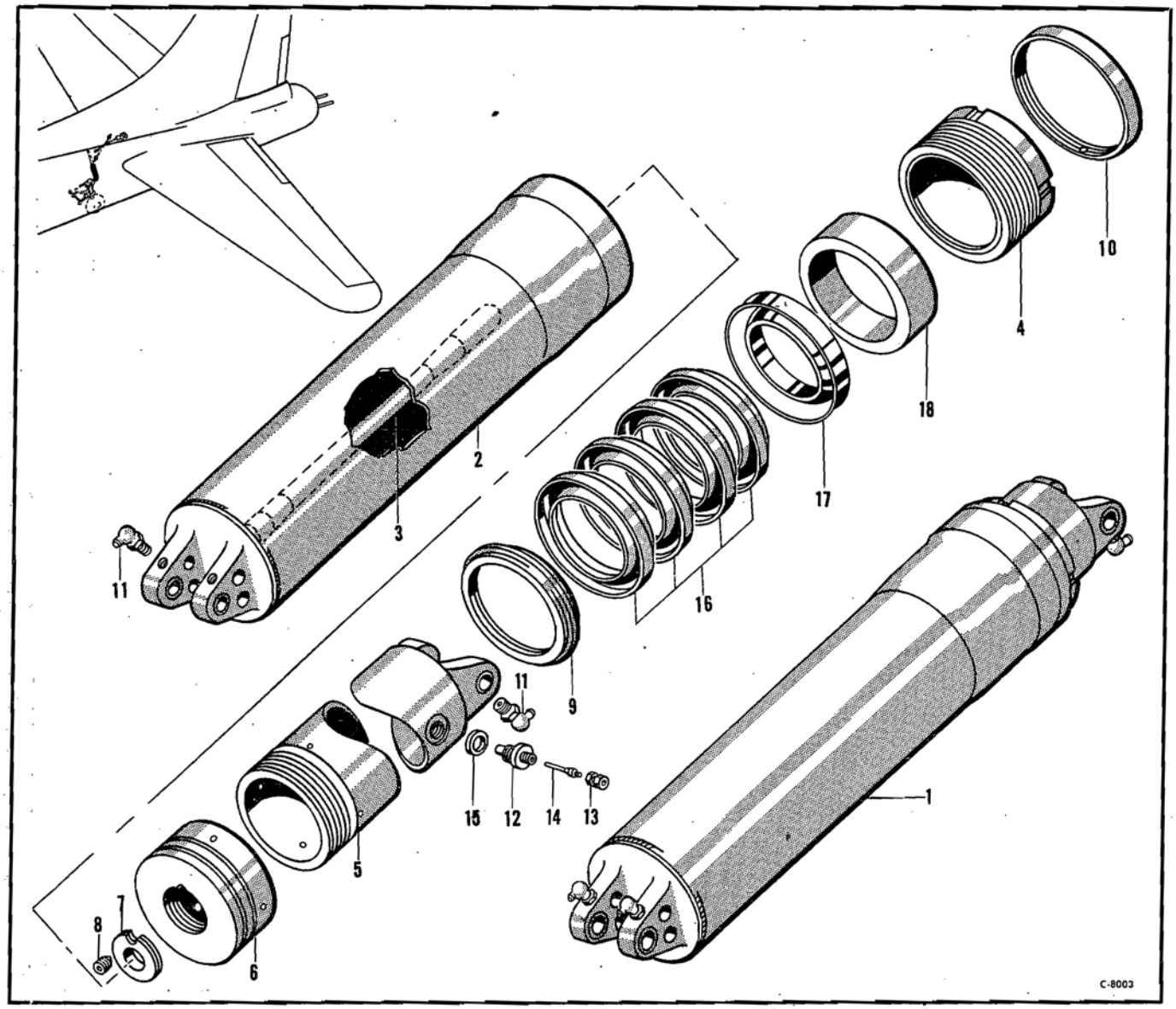

Figure 173—Tail Gear Oleo Assembly

Tail Gear Oleo Assembly

Figure & Index No.	*Part Number*	*1 2 3 4 5 6 7 Nomenclature*	*Usage Code*	*Units Per Assy.*
173-1	8-1285	Oleo Assembly—Tail gear (see fig. 172)	All	Ref
2	8-1285-1	Cylinder Assembly—Weld	All	1
	3-13555	Terminal Assembly—Tail oleo lower	All	1
3	3-13540	Rod—Orifice	All	1
4	3-13537	Nut Assembly—Oleo packing	All	1
	1-18372	Bushing	All	1
	6-9283	Piston Assembly—Tail gear oleo	All	1
5	6-9284	Rod Assembly—Oleo piston	All	1
6	1-18375	Piston—Tail gear oleo	All	1
7	41-5584	Plate—Oleo orifice	All	1
8	AN565D8-4	Screw—Headless set machine	All	1
9	1-18374	Ring—Lower packing	All	1
10	3-13577	Ring—Locking	All	1
11	AN286-3	Fitting—Lubricator pressure grip type PT	All	4
12	AN812-1	Body—High pressure air valve	All	1
13	AN813-1	Cap—High pressure air valve	All	1
14	AN809-1	Core—High pressure air valve	All	1
15	AN901-5C	Gasket—Metal tube connection seal	All	1
16	AN6225-49	Packing—"V" ring hydraulic	All	4
17	AN6228-49	Adapter—"V" ring female hydraulic packing	All	1
18	42B498-14-400-118	Ring—Packing filler	All	1

PUBLISHED BY AVIALOGS.COM

ALIGHTING GEAR

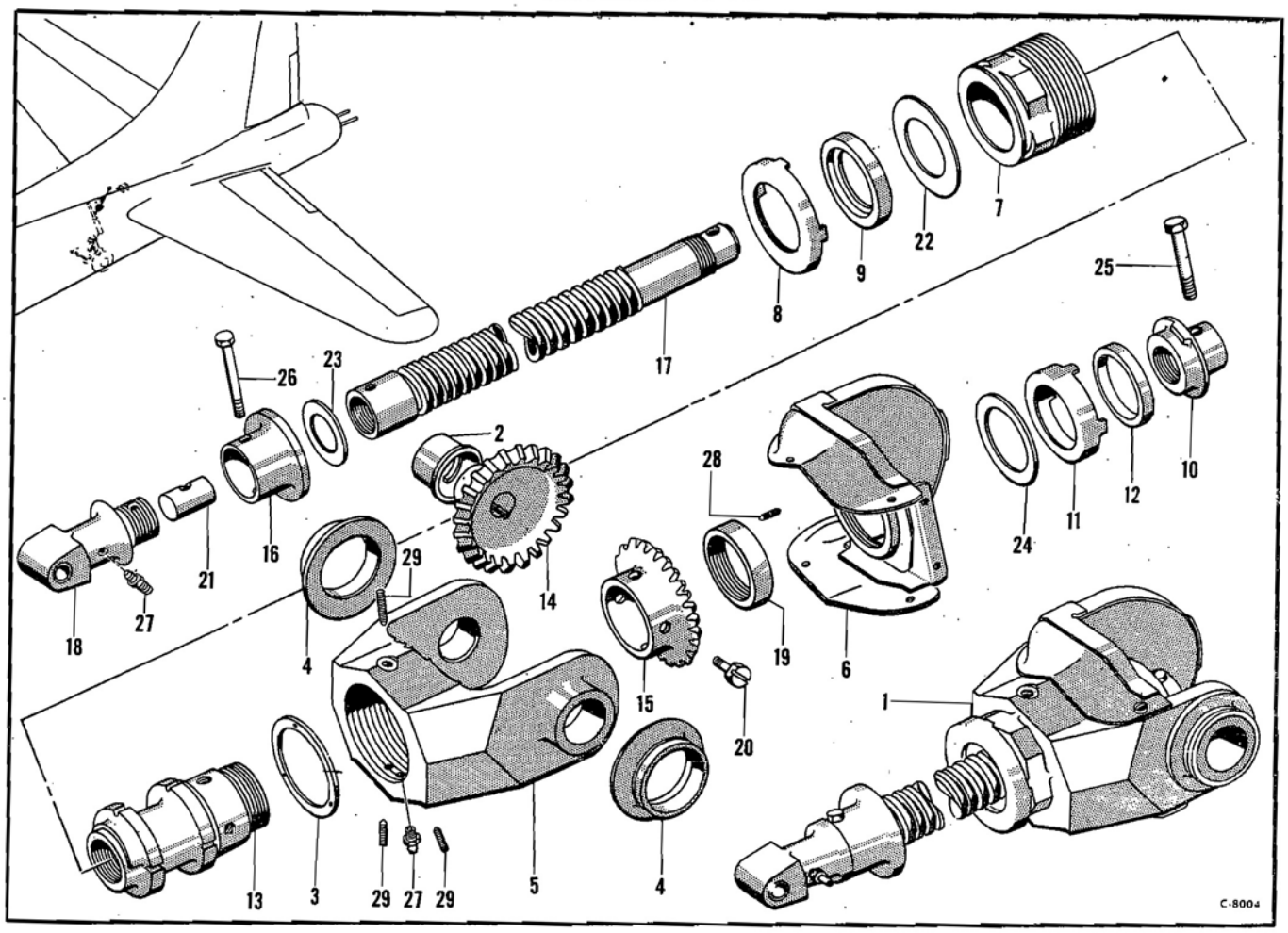

Figure 174—Tail Gear Retracting Assembly

Tail Gear Retracting Assembly

Figure & Index No.	Part Number	1 2 3 4 5 6 7 Nomenclature	Usage Code	Units Per Assy.
174-1	69-1787	Retracting Assembly—Tail gear (see fig. 172)	W	Ref
	69-1787-4	Housing Assembly	W	1
2	21-6420	Bearing—Tail gear retracting gear	W	1
3	21-6717	Ring—Tail gear retracting gear	W	1
4	21-6718-3	Bearing—Tail gear retracting gear	W	2
5	56-3989	Housing—Tail wheel retracting gear	W	1
6	6-4048	Cover Assembly—Tail wheel retracting gear	W	1
	21-6294	Cap Assembly—Tail wheel retracting gear	W	1
7	21-6294-3	Cap	W	1
8	21-6294-4	Retainer	W	1
9	21-6294-5	Bumper	W	1
	21-6355	Stop Assembly—Tail wheel retracting screw	W	1
10	21-6355-1	Stop	W	1
11	21-6355-3	Retainer	W	1
12	51-219	Bumper—Tail wheel retracting screw	W	1
13	3-15117	Nut—Tail wheel retracting screw	W	1
14	21-6305	Gear—Tail wheel retracting gear	W	1
15	21-6306	Gear—Tail wheel retracting gear	W	1
16	21-6356	Stop—Tail wheel retracting screw	W	1
17	3-14654	Screw—Tail gear retracting	W	1
18	6-9343	Terminal Assembly—Tail gear retracting screw	W	1
	6-9343-3	Bushing	W	1
19	21-6359	Collar—Tail gear retracting gear	W	1
20	21-6377-6-3	Bolt—Shoulder	W	1
21	69-1787-1	Plug	W	1
22	69-1787-2	Shim	W	1
23	69-1787-14	Shim	W	1
24	69-1787-15	Shim	W	1
25	AN4-14	Bolt—Aircraft	W	1
	AN310-4	Nut—Aircraft castle	W	2
26	AN4-21	Bolt—Aircraft	W	1
27	AN286-1	Lubricator—Pressure-grip type PT	W	2
28	AN565D8-4	Screw—Headless set machine	W	1
29	AN565D10-6	Screw—Headless set machine	W	3

PUBLISHED BY AVIALOGS.COM

ALIGHTING GEAR

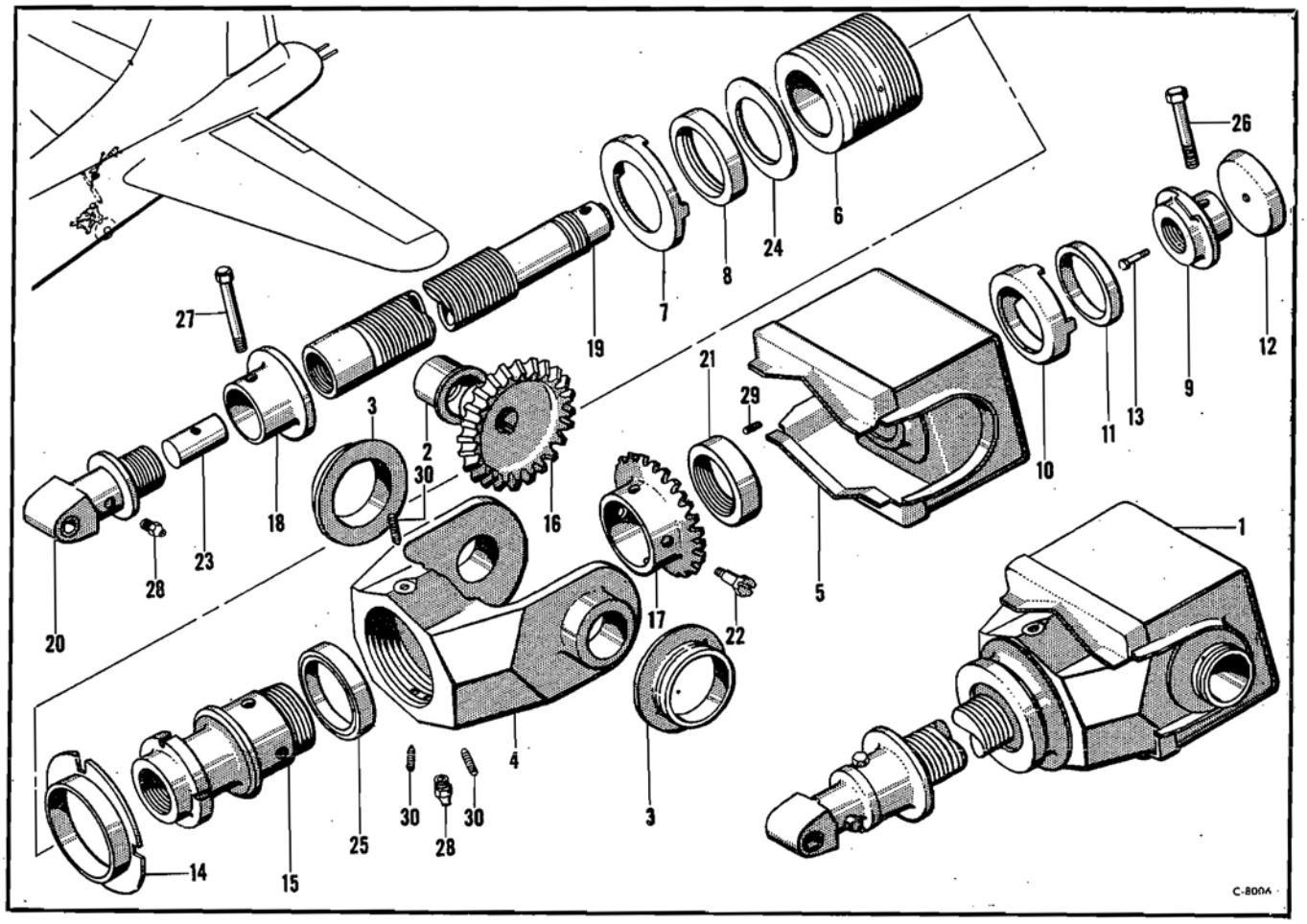

Figure 175—Tail Gear Retracting Assembly

Tail Gear Retracting Assembly

Figure & Index No.	*Part Number*	*1 2 3 4 5 6 7 Nomenclature*	*Usage Code*	*Units Per Assy.*
175-1	69-1787-13	Retracting Assembly—Tail gear (see fig. 172)	QG	Ref
	69-1787-12	Housing Assembly	QG	1
2	21-6420	Bearing—Tail gear retracting gear	QG	1
3	21-6718-3	Bearing—Tail gear retracting gear	QG	2
4	6-15233	Housing—Tail wheel retracting gear	QG	1
5	6-15242	Cover Assembly—Tail wheel retracting gear	QG	1
	21-6294-7	Cap Assembly—Tail wheel retracting gear	QG	1
6	21-6294-6	Cap	QG	1
7	21-6294-4	Retainer	QG	1
8	21-6294-5	Bumper	QG	1
	21-6355-6	Stop Assembly—Tail wheel retracting screw	QG	1
9	21-6355-7	Stop	QG	1
10	21-6355-3	Retainer	QG	1
11	51-219	Bumper—Tail wheel retracting screw	QG	1
12	1-30479	Guide—Tail wheel retracting gear	QG	1
13	AN3DD6A	Bolt—Aircraft	QG	1
	BAC1099-1032DD	Nut—Cap	QG	1
14	1-30472	Ring—Tail wheel retracting gear	QG	1
15	3-21935	Nut—Tail wheel retracting screw	QG	1
16	21-6305	Gear—Tail wheel retracting gear	QG	1
17	21-6306	Gear—Tail wheel retracting gear	QG	1
18	21-6356	Stop—Tail wheel retracting screw	QG	1
19	3-14654	Screw—Tail gear retracting	QG	1
20	6-9343	Terminal Assembly—Tail gear retracting screw	QG	1
	6-9343-3	Bushing	QG	1
21	21-6359	Collar—Tail gear retracting screw	QG	1
22	21-6377-6-3	Bolt—Shoulder	QG	4
23	69-1787-1	Plug	QG	1
24	69-1787-2	Shim	QG	1
25	BS44	Bearing (Fafnir)	QG	1
	22K1-048	Nut (Elastic Stop Nut Corp.)	QG	1
26	AN4-13A	Bolt—Aircraft	QG	1
27	AN4-20A	Bolt—Aircraft	QG	1
	AN365-428	Nut—Self-locking	QG	1
28	AN286-1	Lubricator—Pressure-grip type PT	QG	2
29	566D8-4	Screw—Headless set machine	QG	1
30	566D10-6	Screw—Headless set machine	QG	3

RESTRICTED
PUBLISHED BY AVIALOGS.COM

POWER PLANT

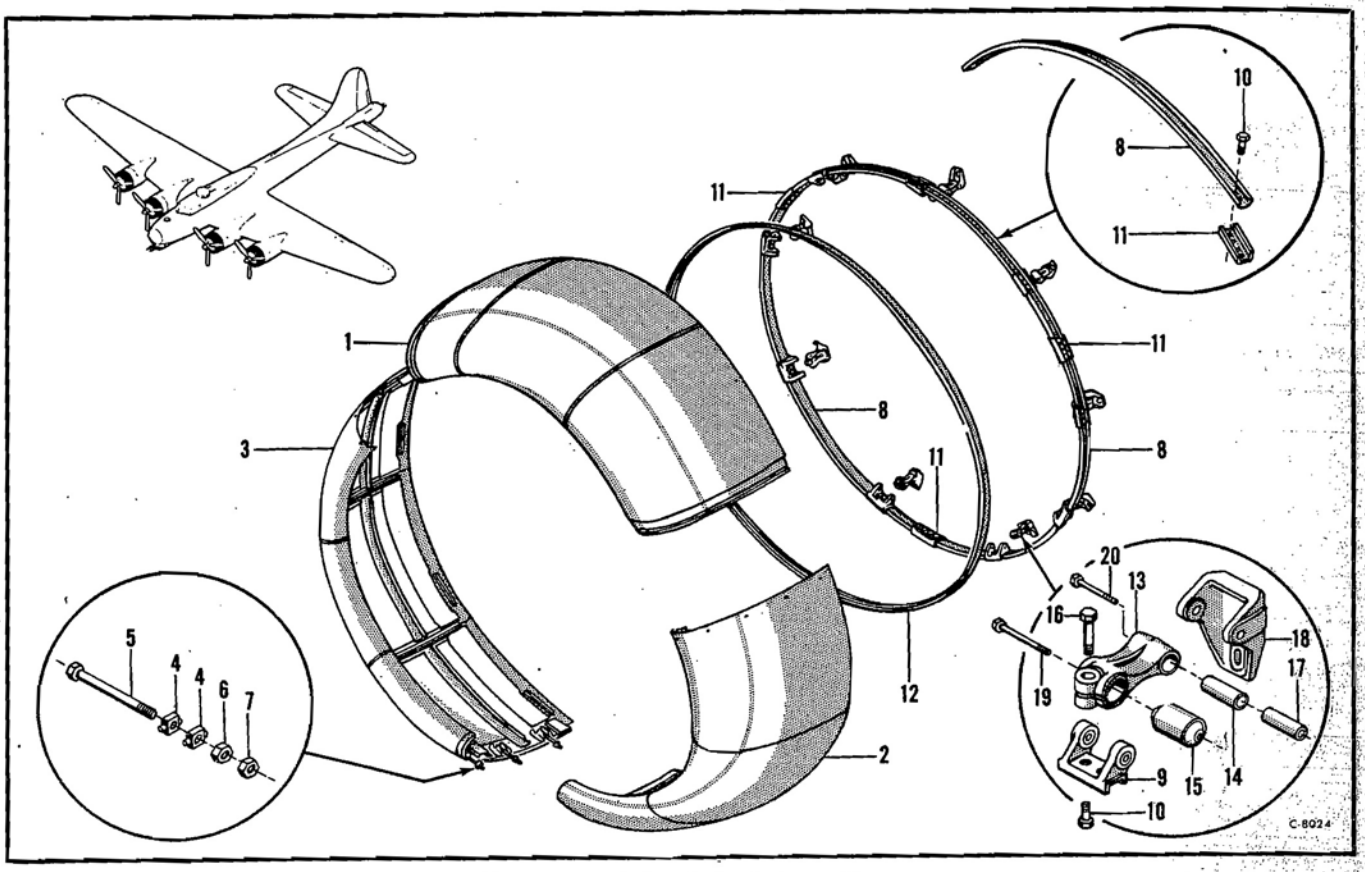

Figure 176—Cowl Anti-drag Ring

Cowl Anti-drag Ring

Figure & Index No.	Part Number	1 2 3 4 5 6 7 Nomenclature	Usage Code	Units Per Assy.
		Cowl Anti-drag Ring		
	65-7616	Installation—Engine no. 1 and 4 cowl anti-drag ring	All	NP
	65-7616-1	Installation—Engine no. 2 cowl anti-drag ring	All	NP
	65-7616-2	Installation—Engine no. 3 cowl anti-drag ring	All	NP
176-1	65-7962	Segment Assembly—Anti-drag ring top	All	1
2	65-7961	Segment Assembly—Anti-drag ring LH	All	1
3	65-7960	Segment Assembly—Anti-drag ring RH	All	1
4	1-21385	Trunnion—Anti-drag ring fastener (used on 65-7960)	All	6
5	1-21927	Bolt—Anti-drag ring clamping (used on 65-7960)	All	3
6	AN315-6R	Nut—Aircraft plain (used on 65-7960)	All	3
7	AN316-6R	Nut—Aircraft check (used on 65-7960)	All	3
	15-8027	Ring Assembly—Anti-drag ring front support	All	1
8	15-8027-1	Channel	MA	3
	15-8027-3	Channel	RJ	1
9	3-14902	Support Assembly—Cowling ring forward	All	9
	1-21924-4-0375	Bushing	All	2
10	AN3-4A	Bolt—Aircraft	All	30
	AN365-1032	Nut—Self-locking	All	30
11	15-8524-2	Channel—Splice	All	3
12	3-14928-1	Ring—Chafing	All	1
	6-16941	Link Assembly—Anti-drag ring	All	9
	3-15101-8	Link Assembly—Anti-drag ring support	RB	1
	3-15101	Link Assembly—Anti-drag ring support	YM	1
13	3-15101-7	Link—Anti-drag ring support	RB	1
	3-15101-2	Link—Anti-drag ring support	YM	1
14	3-15101-3	Bushing	All	1
15	J1246-3	Mounting (Lord Mfg. Co.)	All	1
16	AN3-13	Bolt—Aircraft	All	1
	AN310-3	Nut—Aircraft castle	All	1
17	1-21963-1	Spacer	All	9
	3-15102	Bracket Assembly—Anti-drag ring	All	9
18	3-14912-2	Bracket	All	1
	1-20386	Bushing	All	2
19	AN4-25	Bolt—Aircraft	All	9
	AN310-4	Nut—Aircraft castle	All	9
20	AN4-21	Bolt—Aircraft	All	9
	AN4-22	Bolt—Aircraft	JK	4
	AN960-416	Washer—Plain	All	9
	AN320-4	Nut—Aircraft shear	All	9

PUBLISHED BY AVIALOGS.COM

POWER PLANT

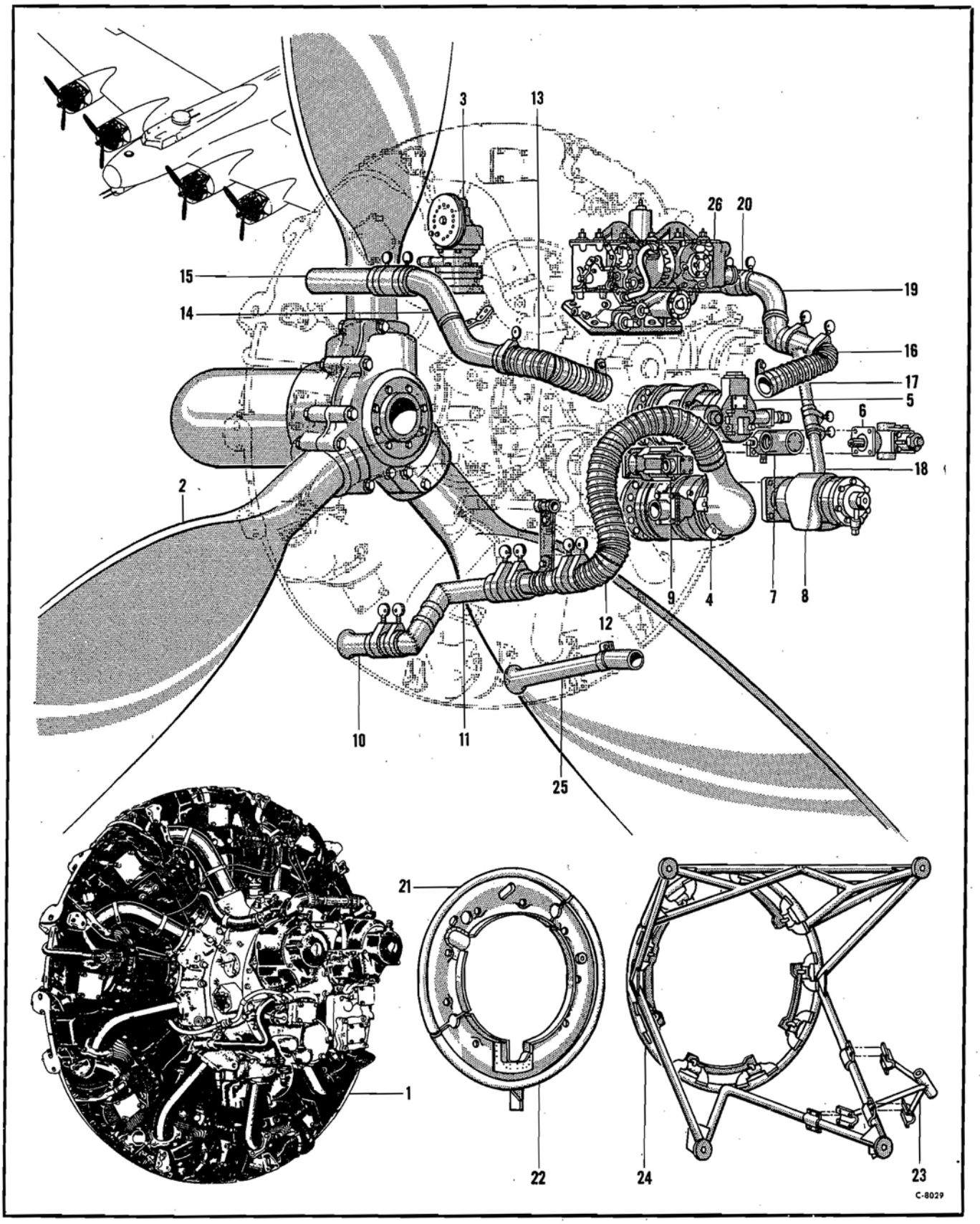

Figure 177—Engine Accessories

RESTRICTED
PUBLISHED BY AVIALOGS.COM

POWER PLANT

Engine Assessories

Figure & Index No.	Part Number	1 2 3 4 5 6 7 Nomenclature	Usage Code	Units Per Assy.
		Engine Accessories		
	65-7359-500	Installation—Engine (LH outboard)	All	NP
	65-7359-501	Installation—Engine (LH inboard)	All	NP
	65-7359-502	Installation—Engine (RH inboard)	All	NP
	65-7359-503	Installation—Engine (RH outboard)	All	NP
177-1	R1820-97	Engine (Wright Aero) GFE	All	1
2	NO NUMBER	Propeller—Wide blade (Spec ANP-22) (Hamilton) GFE	All	1
3	4G8G15D	Governor—Propeller (Hamilton) GFE	SA	1
	4G8G23D	Governor—Propeller (Hamilton) GFE	UJ	1
	4G8G23G1	Governor—Propeller (Hamilton) GFE	XL	1
4	AN3074-1	Generator—Class B (Type P-1) GFE	All	1
	65-7359-516	Starter Assembly	HE	1
	65-7359-507	Starter Assembly	HG	1
5	JH3R	Starter (Jack and Heintz) GFE	HE	1
	915-4C	Starter (Type G-6) (Eclipse) GFE	HG	1
	3-16950	Link Assembly—Starter control	All	1
	65-7359-512	Pump Assembly—Fuel (LH outboard)	All	1
	65-7359-513	Pump Assembly—Fuel (LH inboard)	All	1
	65-7359-514	Pump Assembly—Fuel (RH inboard)	All	1
	65-7359-515	Pump Assembly—Fuel (RH outboard)	All	1
6	AN4101-1	Pump—Power driven fuel (Type G-9) GFE	All	1
	65-7359-510	Unit Assembly—Glycol pump (LH inboard only)	QD	1
7	RD4550	Pump Assembly—Glycol (Romec) (see T.O. AN03-35A-6)	QD	1
8	NO NUMBER	Pump—Vacuum (Type B-8) (Spec 95-28368) GFE (LH and RH inboard only)	All	1
9	770G01	Generator—Tachometer (Kollsman) (see T.O. 05-5E-1)	All	1
	15-9476	Installation—Generator blast tube	All	NP
10	3-16917	Tube Assembly—Generator blast intake	All	1
11	9-5064	Tube Assembly—Generator blast	All	1
12	3-18518	Hose Assembly—Wire support	All	1
	15-7681	Installation—Magneto blast tube (LH outboard)	All	NP
	15-7681-1	Installation—Magneto blast tube (RH outboard)	All	NP
13	1-19707-4	Tubing Assembly—Flexible	EA	1
	3-18518-2	Hose Assembly—Wire support	QH	1
14	15-7681-4	Tube—Magneto blast	All	1
15	15-7681-9	Tube—Magneto blast	All	1
	15-7682	Installation—Magneto blast tube (inboard)	All	NP
16	1-19706-3	Tubing Assembly—Flexible	EA	1
	3-18518-3	Hose Assembly—Wire support	QH	1
17	15-7682-2	Tube Assembly—Weld	All	1
18	15-7682-6	Tube—Magneto blast	All	1
19	15-7682-7	Tube—Magneto blast	All	1
20	15-7682-9	Tube—Magneto blast	All	1
	15-7653-33	Plate Assembly—Engine air seal (LH outboard)	All	1
	15-7653-34	Plate Assembly—Engine air seal (LH inboard)	All	1
	15-7653-35	Plate Assembly—Engine air seal (RH inboard)	All	1
	15-7653-36	Plate Assembly—Engine air seal (RH outboard)	All	1
21	15-7653-21	Segment Assembly (LH outboard)	N	1
	15-7653-20	Segment Assembly (LH inboard)	N	1
	15-7653-2	Segment Assembly (RH inboard)	N	1
	15-7653-12	Segment Assembly (RH outboard)	N	1
	15-7653-41	Segment Assembly (LH outboard)	WF	1
	15-7653-42	Segment Assembly (LH inboard)	WF	1
	15-7653-43	Segment Assembly (RH inboard)	WF	1
	15-7653-44	Segment Assembly (RH outboard)	WF	1
22	15-7653-31	Segment Assembly—Engine air seal	N	1
	15-7653-37	Segment Assembly—Engine air seal	WF	1
23	14-3569	Installation—Starter crank support (see fig. 185)	HE	NP
	14-1820	Installation—Starter crank support (see fig. 184)	HG	NP
24	65-7359-511	Mount Assembly—Engine dynafocal (see fig. 179 and 180)	All	1
	9-3370	Installation—Blast tube (outboard)	All	NP
25	9-3370-1	Tube Assembly—Blast	All	2
26	PD12H2	Carburetor (Stromberg) (furnished with engine)	All	Ref
	15-18502	Installation—Crankcase breather tube	All	NP
	15-18502-1	Tube—1 & 4 Engines	All	1
	15-18502-4	Tube—No. 2 Engine	All	1
	15-18502-5	Tube—No. 3 Engine	All	1
	15-18502-6	Tube	All	1
	3-32588	Hose—Flexible	All	1
	AN846-16	Elbow—Hose Bulkhead 45°	All	1
	AN960-2116L	Washer—Plain	All	2
	AN924-16	Nut—Flared Tube	All	1

PUBLISHED BY AVIALOGS.COM

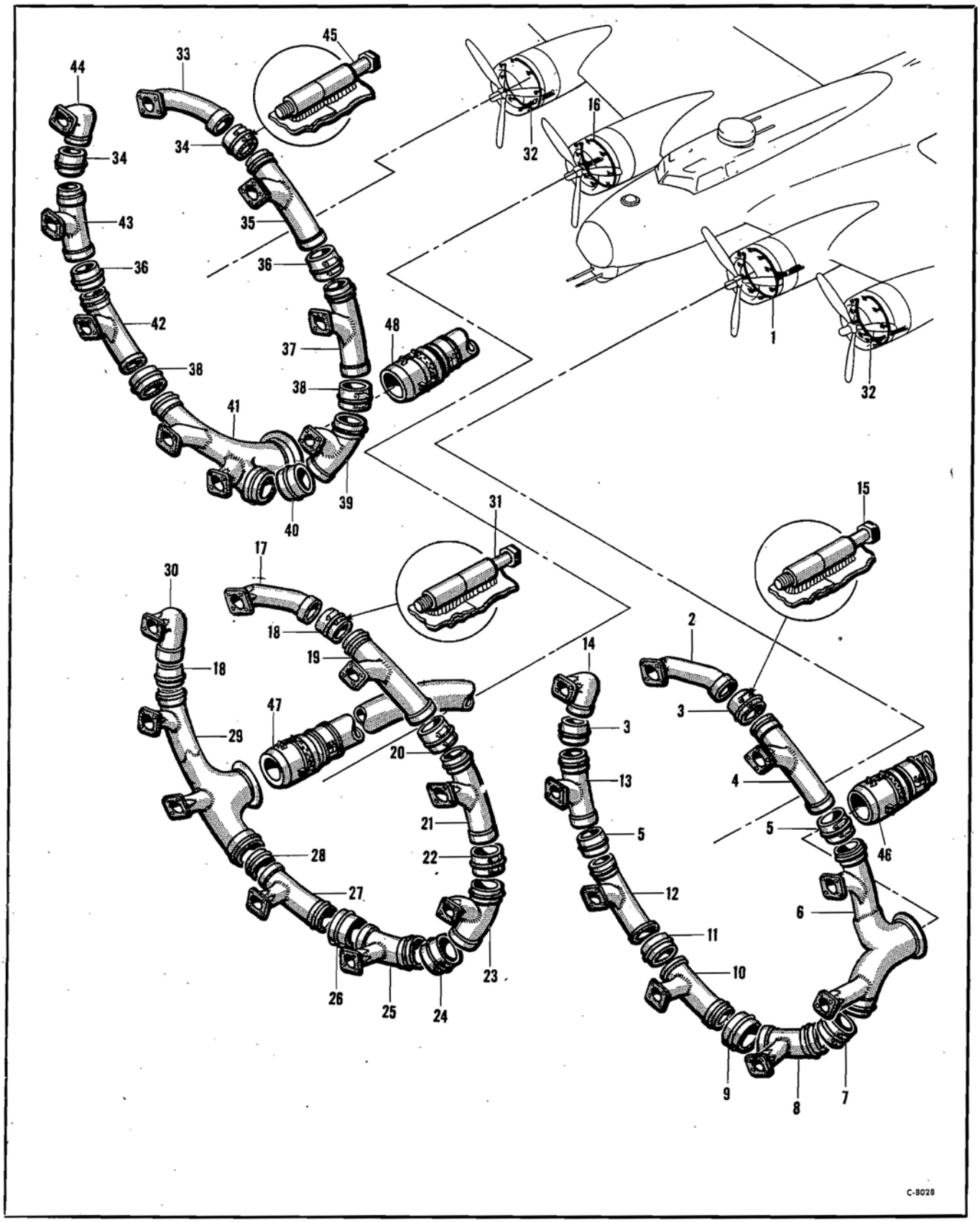

Figure 178—Exhaust Manifold Assemblies

RESTRICTED
PUBLISHED BY AVIALOGS.COM

POWER PLANT

Exhaust Manifold Assemblies

Figure & Index No.	Part Number	1 2 3 4 5 6 7 Nomenclature	Usage Code	Units Per Assy.
		Exhaust Manifold Assemblies		
	65-7350	Installation Power Plant	All	NP
178-1	55-6194	Manifold Assembly—LH inboard exhaust	All	1
2	55-6193-1	Section Assembly—Weld	All	1
3	3-12481-27	Clamp Assembly—Manifold	All	2
4	55-6193-9	Section Assembly—Weld	All	1
5	3-12481-35	Clamp Assembly—Manifold	All	2
6	55-6194-403	Section Assembly—Weld	All	1
7	3-13796-51	Clamp Assembly—Manifold	All	1
8	55-6194-401	Section Assembly—Weld	All	1
9	3-13796-47	Clamp Assembly—Manifold	All	1
10	55-6194-5	Section Assembly—Weld	All	1
11	3-12481-43	Clamp Assembly—Manifold	All	1
12	55-6193-4	Section Assembly—Weld	All	1
13	55-6193-3	Section Assembly—Weld	All	1
14	55-6193-2	Section Assembly—Weld	All	1
15	AN4-14	Bolt—Aircraft	All	14
	AN310-4	Nut—Aircraft castle	All	14
16	55-6195	Manifold Assembly—RH inboard exhaust	All	1
17	55-6193-1	Section Assembly—Weld	All	1
18	3-12481-27	Clamp Assembly—Manifold	All	2
19	55-6193-9	Section Assembly—Weld	All	1
20	3-12481-35	Clamp Assembly—Manifold	All	1
21	55-6193-8	Section Assembly—Weld	All	1
22	3-12481-43	Clamp Assembly—Manifold	All	1
23	55-6193-7	Section Assembly—Weld	All	1
24	3-13796-47	Clamp Assembly—Manifold	All	1
25	55-6195-403	Section Assembly—Weld	All	1
26	3-13796-51	Clamp Assembly—Manifold	All	1
27	55-6195-402	Section Assembly—Weld	All	1
28	3-13796-53	Clamp Assembly—Manifold	All	1
29	55-6195-401	Section Assembly—Weld	All	1
30	55-6193-2	Section Assembly—Weld	All	1
31	AN4-14	Bolt—Aircraft	All	14
	AN310-4	Nut—Aircraft castle	All	14
32	55-6193	Manifold Assembly—Outboard exhaust	All	2
33	55-6193-1	Section Assembly—Weld	All	1
34	3-12481-27	Clamp Assembly—Manifold	All	2
35	55-6193-9	Section Assembly—Weld	All	1
36	3-12481-35	Clamp Assembly—Manifold	All	2
37	55-6193-8	Section Assembly—Weld	All	1
38	3-12481-43	Clamp Assembly—Manifold	All	2
39	55-6193-7	Section Assembly—Weld	All	1
40	3-13796-47	Clamp Assembly—Manifold	All	1
41	55-6193-402	Section Assembly—Weld	All	1
42	55-6193-4	Section Assembly—Weld	All	1
43	55-6193-3	Section Assembly—Weld	All	1
44	55-6193-2	Section Assembly—Weld	All	1
45	AN4-14	Bolt—Aircraft	All	14
	AN310-4	Nut—Aircraft castle	All	14
46	95-6525	Tailpipe Assembly—LH inboard (see fig. 17)	E	Ref
	95-6525-811	Tailpipe Assembly—LH inboard (see fig. 17)	SE	Ref
	95-6525-820	Tailpipe Assembly—LH inboard (see fig. 17)	UM	Ref
	95-6525-819	Tailpipe Assembly—LH inboard (see fig. 17)	GP	Ref
47	85-6525	Tailpipe Assembly—RH inboard (see fig. 17)	E	Ref
	85-6525-712	Tailpipe Assembly—RH inboard (see fig. 17)	SE	Ref
	85-6525-722	Tailpipe Assembly—RH inboard (see fig. 17)	UM	Ref
	85-6525-720	Tailpipe Assembly—RH inboard (see fig. 17)	GP	Ref
48	65-6690	Tailpipe Assembly—LH outboard (see fig. 17)	E	Ref
	65-6690-1	Tailpipe Assembly—RH outboard (see fig. 17)	E	Ref
	65-6690-506	Tailpipe Assembly—Outboard (see fig. 17)	ZE	Ref

PUBLISHED BY AVIALOGS.COM

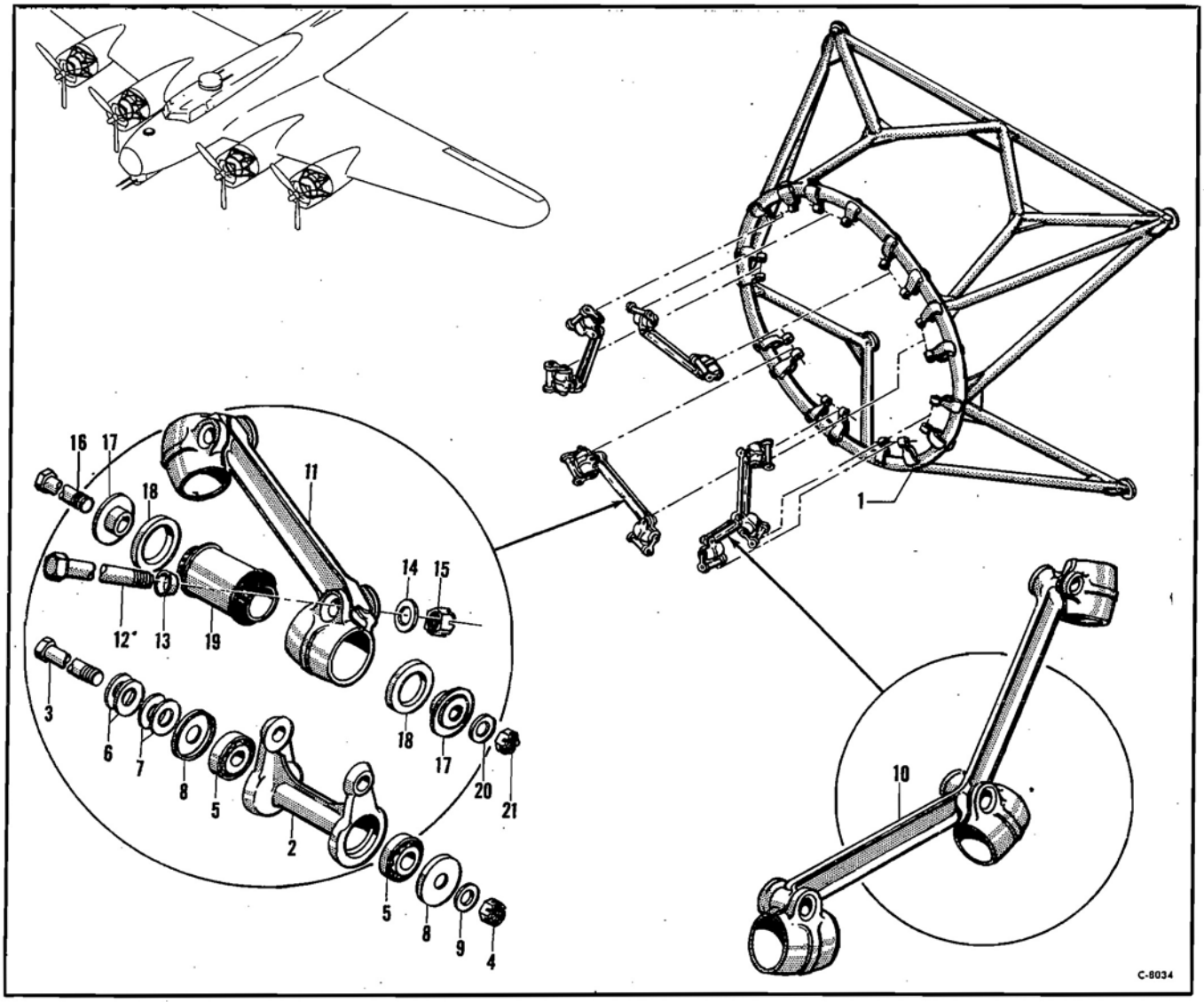

Figure 179—Engine Dynafocal Mount Assembly

Engine Dynafocal Mount Assembly

Figure & Index No.	*Part Number*	*1 2 3 4 5 6 7* *Nomenclature*	*Usage Code*	*Units Per Assy.*
	65-7359-511	Mount Assembly—Engine dynafocal (see fig. 177)	All	Ref
179-1	55-6185	Mount Assembly—Engine	All	1
	15-6246	Installation—Engine mount dynafocal suspension	YA	NP
	RL15SA3	Link Assembly—Engine dynafocal (Lord Mfg. Co.)	All	9
2	RL15-4	Link	All	1
3	NAS56-50-5	Bolt—Close tolerance	All	1
4	AN310-6	Nut—Aircraft castle	All	1
5	RL15-5	Bearing—Roller	All	2
6	RL15-9	Shim	All	2
7	RL15-10	Shim	All	2
8	RL15-21	Cap—Bearing	All	2
9	AN960-616	Washer—Plain	All	1
10	RL15-2	Bracket Assembly—Triple	All	1
11	RL15-3	Bracket Assembly—Double	All	3
12	AN7-53	Bolt—Aircraft	All	9
13	RL15-12	Washer—Spherical	All	9
14	AN960-716	Washer—Plain	All	9
15	AN310-7	Nut—Aircraft castle	All	9
16	AN5-37	Bolt—Aircraft	All	9
17	RL15-13	Plate—End	All	18
18	RL15-22	Washer—Rubber snubbing	All	18
19	RL15-1	Mounting—Rubber	All	9
20	AN960-516	Washer—Plain	All	9
21	AN310-5	Nut—Aircraft castle	All	9
	289000	Installation—Dynamic suspension (Goodyear) (see fig. 180)	SK	NP

RESTRICTED
PUBLISHED BY AVIALOGS.COM

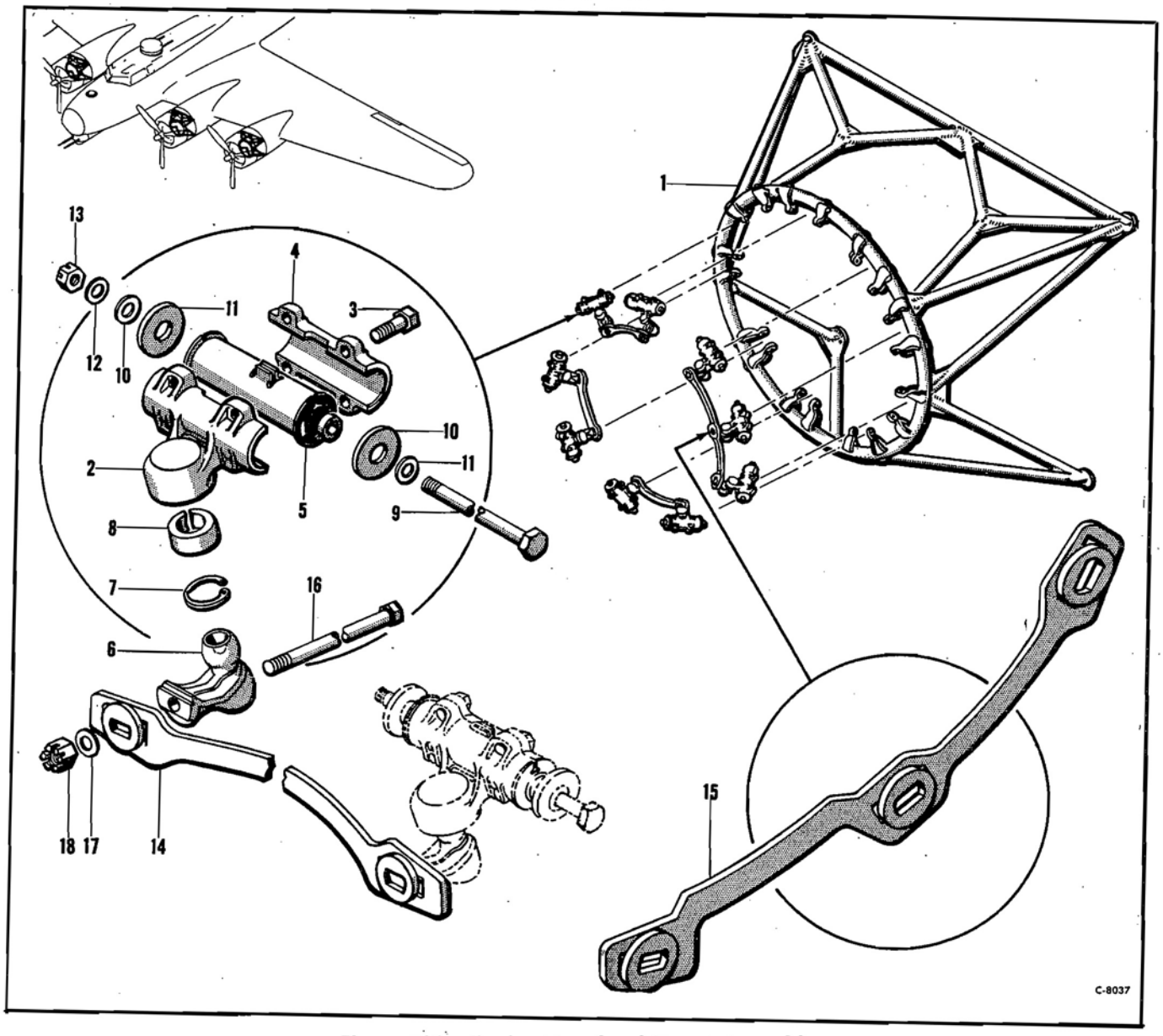

Figure 180—Engine Dynafocal Mount Assembly

Engine Dynafocal Mount Assembly

Figure & Index No.	*Part Number*	*1 2 3 4 5 6 7* *Nomenclature*	*Usage Code*	*Units Per Assy.*
	65-7359-511	Mount Assembly—Engine dynafocal (see fig. 177)	All	Ref
180-1	55-6185	Mount Assembly—Engine	All	1
	289000	Installation—Dynamic suspension (Goodyear)	SK	NP
	215827	Bracket Assembly—Dynamic suspension	All	9
2	215807	Arm—Dynamic suspension	All	1
3	215822	Bolt—Dynamic suspension	All	4
4	215815	Cap—Dynamic suspension	All	1
5	215812	Spring—Dynamic suspension (rubber)	All	1
6	215808	Bracket—Dynamic suspension	All	1
7	215811	Ring—Dynamic suspension	All	1
8	215810	Bearing—Dynamic suspension	All	1
9	NAS56-50-5	Bolt—Close tolerance	All	9
10	215821	Shim—Dynamic suspension	All	AR
11	215820	Washer—Dynamic suspension	All	18
12	AN960-616	Washer—Plain	All	9
13	AN355-6	Nut—Slotted	All	9
14	215804	Arm Assembly—Double torsion	All	3
15	289001	Arm Assembly—Triple torsion	All	1
16	AN7-53	Bolt—Aircraft	All	9
17	AN960-716	Washer—Plain	All	9
18	AN355-7	Nut—Slotted	All	9
	15-6246	Installation—Engine mount dynafocal suspension (see fig. 179)	YA	NP

PUBLISHED BY AVIALOGS.COM

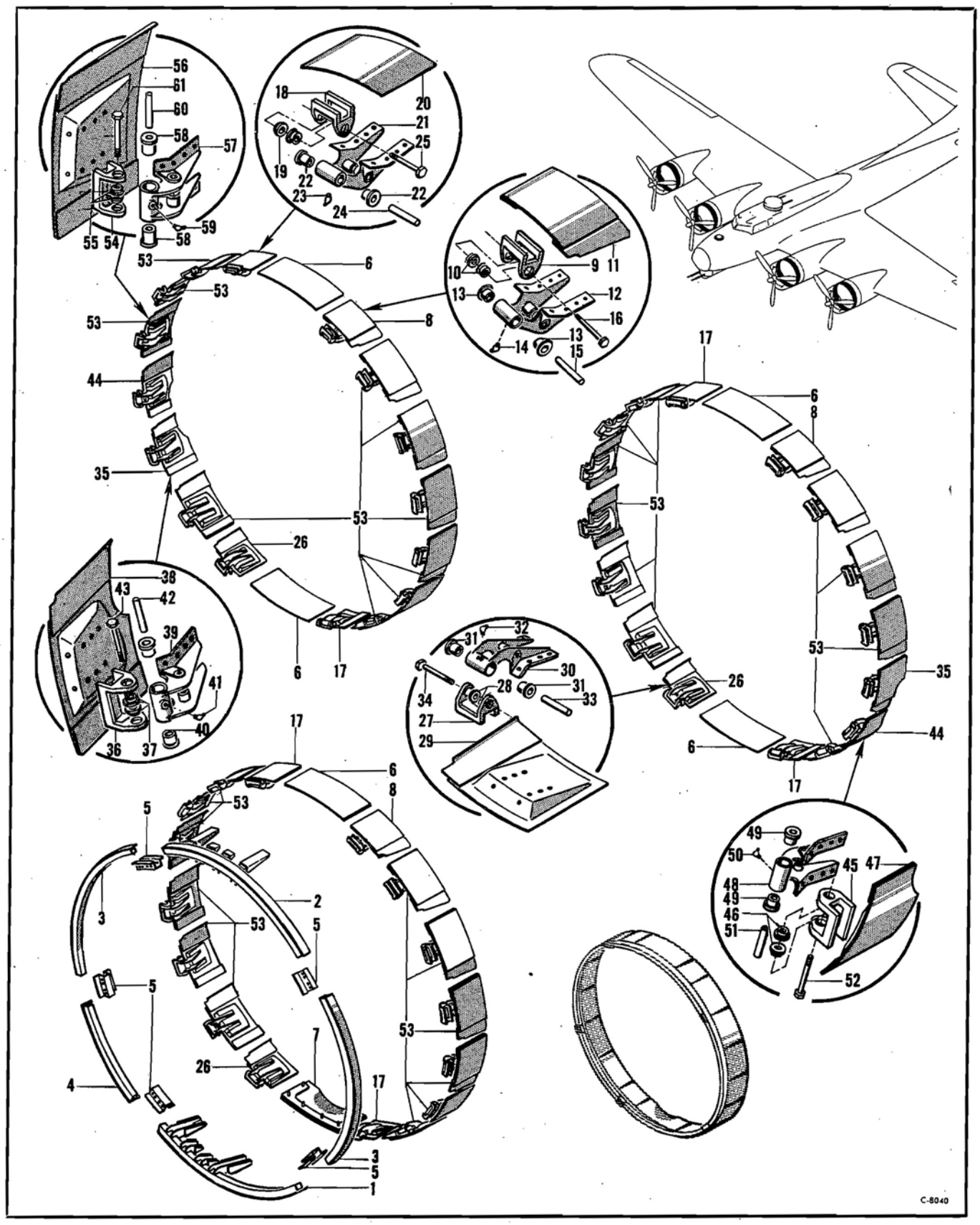

Figure 181—Cowling Flaps

PUBLISHED BY AVIALOGS.COM

POWER PLANT

Cowling Flaps

Figure & Index No.	Part Number	1 2 3 4 5 6 7 Nomenclature	Usage Code	Units Per Assy.
		Cowling Flaps		
	55-7655	Installation—Cowling flap (outboard) (see fig. 182)	All	NP
	55-7655-1	Installation—Cowling flap (LH inboard) (see fig. 182)	All	NP
	55-7655-2	Installation—Cowling flap (RH inboard) (see fig. 182)	All	NP
	15-7624	Ring Assembly—Cowl flap support	All	1
181-1	15-7624-1	Tube Assembly—Weld	All	1
2	15-7624-2	Tube Assembly—Weld	All	1
3	15-7624-16	Tube Assembly—Weld	All	2
4	15-7624-17	Tube Assembly—Weld	All	1
5	1-20021	Channel	All	5
6	9-3682	Flap Assembly—Anti-drag fixed	All	2
7	15-7662	Flap Assembly—Anti-drag fixed (outboard)	All	1
8	49-3658	Flap Assembly—Anti-drag special	All	1
	3-14911	Hinge Assembly—Cowling flap	All	1
9	3-14911-2	Hinge—Cowling flap	All	1
10	1-21949-2	Bushing	All	2
11	9-3658-1	Stiffener Assembly—Spotweld	All	1
	6-10722	Lever Assembly—Cowling flaps	All	1
12	6-10722-2	Lever	DB	1
	6-10722-3	Lever	KL	1
13	1-20387	Bushing—Cowl flap lever	DB	2
	3-27936	Bushing—Cowl flap lever	KL	2
14	NAS2-301	Fitting—Lubrication	DB	1
15	1-21966	Spacer	All	1
16	AN4-35	Bolt—Aircraft	All	1
	AN310-4	Nut—Aircraft castle	All	1
17	46-10129-1	Flap Assembly—Anti-drag special (RH)	All	2
	3-14911	Hinge Assembly—Cowling flap	All	1
18	3-14911-2	Hinge—Cowling flap	All	1
19	1-21949-2	Bushing	All	2
	55-7971-1	Flap Assembly—Anti-drag special (RH)	All	1
20	15-7971-3	Stiffener Assembly—Spotweld	All	1
	3-15100	Lever Assembly—Cowling flap	All	1
21	6-10473-2	Lever	DB	1
	6-10473	Lever	KL	1
22	1-20387	Bushing	DB	2
	1-27936	Bushing	KL	2
23	AN287-6	Fitting—Lubricator pressure-grip type D	DB	1
24	1-21966	Spacer	All	1
25	AN4-35	Bolt—Aircraft	All	1
	AN310-4	Nut—Aircraft castle	All	1
26	46-10129	Flap Assembly—Anti-drag special (LH)	All	1
	3-14911	Hinge Assembly—Cowling flap	All	1
27	3-14911-2	Hinge—Cowling flap	All	1
28	1-21949-2	Bushing	All	2
	55-7971	Flap Assembly—Anti-drag special	All	1
29	15-7971-2	Stiffener Assembly—Spotweld	All	1
	3-15100	Lever Assembly—Cowling flap	All	1
30	6-10473-2	Lever	DB	1
	6-10473	Lever	KL	1
31	1-20387	Bushing	DB	2
	1-27936	Bushing	KL	2
32	AN287-6	Fitting—Lubricator pressure-grip type D	DB	1
33	1-21966	Spacer	All	1
34	AN4-35	Bolt—Aircraft	All	1
	AN310-4	Nut—Aircraft castle	All	1
35	49-3424	Flap Assembly—Anti-drag ring (inboard)	All	1
	3-14911	Hinge Assembly—Cowling flaps	All	1
36	3-14911-2	Hinge—Cowling flap	All	1
37	1-21949-2	Bushing	All	2
38	9-3424-1	Stiffener Assembly—Spotweld	All	1
	3-15100	Lever Assembly—Cowling flap	All	1
39	6-10473-2	Lever	All	1
40	1-20387	Bushing	All	2
41	AN287-6	Fitting—Lubricator pressure-grip type D	All	1
42	1-21966	Spacer	All	1
43	AN4-35	Bolt—Aircraft	All	1
	AN310-4	Nut—Aircraft castle	All	1
44	49-3614	Flap Assembly—Anti-drag ring (inboard)	All	1
	3-14911	Hinge Assembly—Cowling flap	All	1
45	3-14911-2	Hinge—Cowling flap	All	1
46	1-21949-2	Bushing	All	2
47	9-3614-1	Stiffener Assembly—Spotweld	All	1
	3-15100	Lever Assembly—Cowling flap	All	1
48	6-10473-2	Lever	All	1
49	1-20387	Bushing	All	2
50	AN287-6	Fitting—Lubricator pressure-grip type D	All	1
51	1-21966	Spacer	All	1
52	AN4-35	Bolt—Aircraft	All	1
	AN310-4	Nut—Aircraft castle	All	1
53	46-10128	Flap Assembly—Anti-drag ring (outboard)	All	12
	3-14911	Hinge Assembly—Cowling flap	All	1
54	3-14911-2	Hinge—Cowling flap	All	1
▮ 55	1-21949-2	Bushing	All	2
	55-7970	Flap Assembly—Anti-drag ring	All	1
56	15-7970-1	Stiffener Assembly—Spotweld	All	1
	3-15100	Lever Assembly—Cowling flap	All	1
57	6-10473-2	Lever	All	1
58	1-20387	Bushing	All	2
59	AN287-6	Fitting—Lubricator pressure-grip type D	All	1
60	1-21966	Spacer	All	1
61	AN4-35	Bolt—Aircraft	All	1
	AN310-4	Nut—Aircraft castle	All	1

PUBLISHED BY AVIALOGS.COM

POWER PLANT

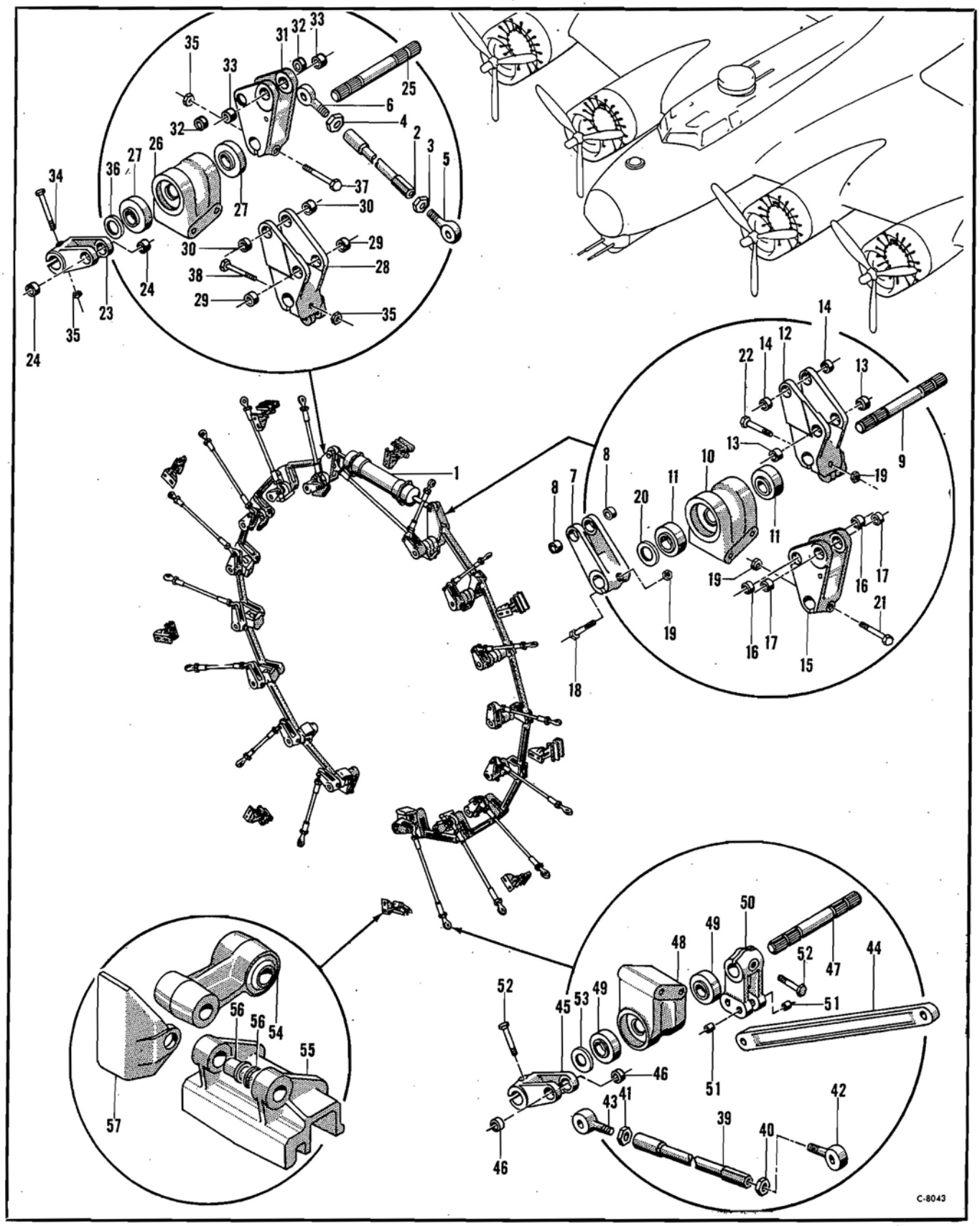

Figure 182—Cowl Flaps Operating Mechanism

PUBLISHED BY AVIALOGS.COM

POWER PLANT

Cowl Flaps Operating Mechanism

Figure & Index No.	Part Number	1 2 3 4 5 6 7 Nomenclature	Usage Code	Units Per Assy.
		Cowl Flaps Operating Mechanism		
	55-7655	Installation—Cowling flap (outboard) (see fig. 181)	All	NP
	55-7655-1	Installation—Cowling flap (LH inboard) (see fig. 181)	All	NP
	55-7655-2	Installation—Cowling flap (RH inboard) (see fig. 181)	All	NP
182-1	6-9477	Cylinder Assembly—Cowl flap (see fig. 192)	All	1
	1-20380-1	Rod Assembly—318 control	All	1
2	1-20380-3	Tube Assembly—Weld	All	1
3	AN316-6L	Nut—Aircraft check	All	1
4	AN316-6R	Nut—Aircraft check	All	1
5	RE3ML6-2N	End—Rod (Fafnir)	All	1
6	RE3M6-2N	End—Rod (Fafnir)	All	1
	15-7655-6	Lever Assembly—Cylinder LH	DA	1
	15-7655-7	Lever Assembly—Cylinder RH	DA	1
	3-14908	Lever Assembly—Cowling flap	DA	1
7	3-14908-2	Lever	DA	1
8	1-21924-3-0218	Bushing	DA	2
9	1-18915	Shaft—Cowling flap	DA	1
	3-13791	Housing Assembly—Cowl flap	DA	1
10	3-13791-1	Housing (die casting)	DA	1
11	AN201K8A	Bearing—Metal shielded ball	DA	2
	6-9492	Lever Assembly—Cowl flap cylinder (used on 15-7655-6)	DA	1
12	6-9492-2	Lever	DA	1
13	BAC366-18S	Bushing	DA	2
14	BAC326-18S	Bushing	DA	2
	3-13750	Lever Assembly—Cowl flap cylinder (used on 15-7655-7)	DA	1
15	3-13750-2	Lever	DA	1
16	BAC366-18S	Bushing—3-8 OD bearing	DA	2
17	BAC326-18S	Bushing—3-8 OD bearing	DA	2
18	AN3-12A	Bolt—Aircraft	DA	1
19	363-1032	Nut—Self-locking	DA	1
20	AN960-816	Washer—Plain	DA	1
21	AN3-13A	Bolt—Aircraft (used on 15-7655-6)	DA	1
	363-1032	Nut—Self-locking (used on 15-7655-6)	DA	1
22	AN3-14A	Bolt—Aircraft (used on 15-7655-7)	DA	1
	363-1032	Nut—Self-locking (used on 15-7655-7)	DA	1
	55-7655-6	Lever Assembly—Cylinder RH	IH	1
	55-7655-5	Lever Assembly—Cylinder LH	IH	1
	3-14908	Lever Assembly—Cowling flap	IH	1
23	3-14908-2	Lever	IH	1
24	1-21924-3-0218	Bushing	IH	2
25	1-18915	Shaft—Cowling flap	IH	1
	3-13791	Housing Assembly—Cowl flap	IH	1
26	3-13791-1	Housing (die casting)	IH	1
27	AN201K81	Bearing—Metal shielded ball	IH	2
	6-9492-4	Lever Assembly—Cowl flap cylinder (used on 55-7655-5)	IH	1
28	6-9492-3	Lever	IH	1
29	NAS75-4-009	Bushing—Plain steel	IH	2
30	BAC326-18S	Bushing—3-8 OD bearing	IH	2
	3-13750-4	Lever Assembly—Cowl flap cylinder (used on 55-7655-6)	IH	1
31	3-13750-3	Lever	IH	1
32	NAS75-4-009	Bushing—Plain steel	IH	2
33	BAC326-18S	Bushing—3-8 OD bearing	IH	2
34	AN3-12A	Bolt—Aircraft	IH	1
35	363-1032	Nut—Self-locking	IH	1
36	AN960-816	Washer—Plain	IH	1
37	AN3-13A	Bolt—Aircraft (used on 55-7655-5)	IH	1
	363-1032	Nut—Self-locking (used on 55-7655-5)	IH	1
38	AN3-14A	Bolt—Aircraft (used on 55-7655-6)	IH	1
	363-1032	Nut—Self-locking (used on 55-7655-6)	IH	1
	1-20380	Rod Assembly—3-8 control	All	16
39	1-20380-2	Tube Assembly—Weld	All	1
40	AN316-6L	Nut—Aircraft check	All	1
41	AN316-6R	Nut—Aircraft check	All	1
42	RE3ML6-2N	End—Rod (Fafnir)	All	1
43	RE3M6-2N	End—Rod (Fafnir)	All	1
44	1-17579	Link—Engine cowl flaps	DA	14
	1-17579-4	Link—Engine cowl flaps	IH	14
	15-7655-5	Lever Assembly—Cowl flaps (LH)	DA	7
	15-7655-8	Lever Assembly—Cowl flaps (RH)	DA	7
	55-7655-3	Lever Assembly—Cowl flaps (LH)	IH	7
	55-7655-4	Lever Assembly—Cowl flaps (RH)	IH	7
	3-14908	Lever Assembly—Cowling flap	All	1
45	3-14908-2	Lever	All	1
46	1-21924-3-0218	Bushing	All	2
47	1-18915	Shaft—Cowling flap	All	1
	3-13791	Housing Assembly—Cowl flap	All	1
48	3-13791-1	Housing (die casting)	All	1
49	AN201K8A	Bearing—Metal shielded ball	All	1
	3-13742	Lever Assembly—Engine cowl flap (used on 15-7655-5 and 15-7655-8)	DA	1
	3-13742-4	Lever Assembly—Engine cowl flap (used on 55-7655-3 and 55-7655-4)	IH	1
50	3-13742-2	Lever (used on 3-13742)	DA	1
	3-13742-3	Lever (used on 3-13742-4)	IH	1
51	BAC366-21ST	Bushing—Bearing (used on 3-13742)	DA	4
	NAS75-4-011	Bushing—Plain steel (used on 3-13742-4)	IH	4
52	AN3-12A	Bolt—Aircraft	All	2
	363-1032	Nut—Self-locking	All	2
53	41-7085-72-33	Washer	All	1
54	6-16941	Link Assembly—Anti-drag ring (see fig. 176)	All	9
	9-3687	Bracket Assembly—Rear ring cowl flap	All	9
55	9-3687-2	Bracket	All	1
56	1-21949-1	Bushing	All	2
	3-15102	Bracket Assembly—Anti-drag ring	All	1
57	3-14912-2	Bracket	All	1
	1-20386	Bushing	All	2

PUBLISHED BY AVIALOGS.COM

POWER PLANT

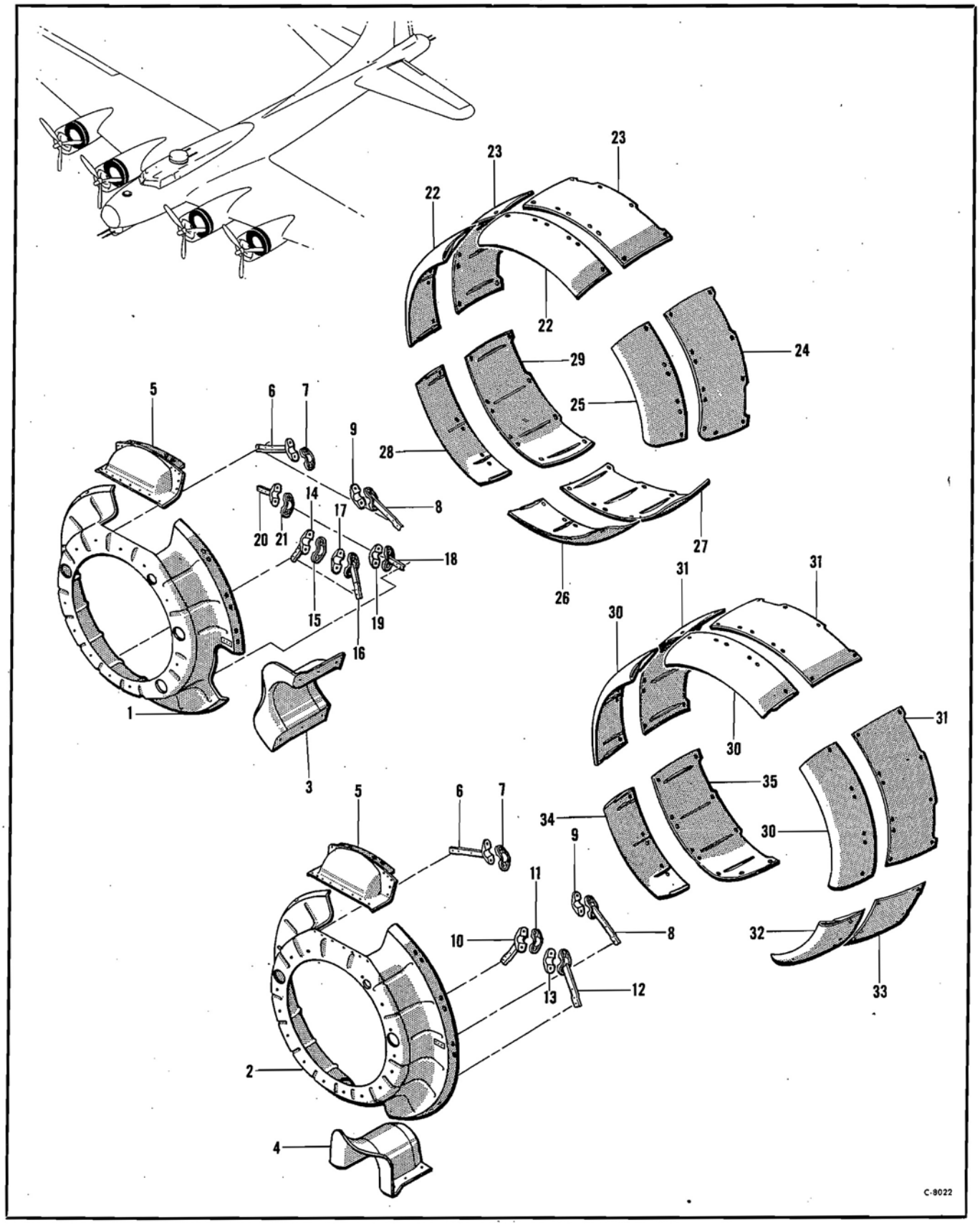

Figure 183—Fixed Cowling and Shrouds

RESTRICTED
PUBLISHED BY AVIALOGS.COM

POWER PLANT

Fixed Cowling and Shrouds

Figure & Index No.	Part Number	1 2 3 4 5 6 7 Nomenclature	Usage Code	Units Per Assy.
		Fixed Cowling and Shrouds		
	65-7350	Installation—Power plant	All	NP
	15-7668-45	Installation—Fixed inboard cowl (LH)	All	NP
	15-7668-46	Installation—Fixed inboard cowl (RH)	All	NP
	15-7666-31	Installation—Fixed outboard cowl (LH)	All	NP
	15-7666-32	Installation—Fixed outboard cowl (RH)	All	NP
	15-7668-41	Cowl Assembly—Fixed inboard (LH)	All	1
	15-7668-42	Cowl Assembly—Fixed inboard (RH)	All	1
	15-7666-27	Cowl Assembly—Fixed outboard (LH)	All	1
	15-7666-28	Cowl Assembly—Fixed outboard (RH)	All	1
183-1	15-7668-43	Cowl Assembly—Spotweld (LH inboard)	All	1
	15-7668-44	Cowl Assembly—Spotweld (RH inboard)	All	1
2	15-7666-29	Cowl Assembly—Spotweld (LH outboard)	All	1
	15-7666-30	Cowl Assembly—Spotweld (RH outboard)	All	1
	15-6625	Installation—Forward inboard shroud (LH)	All	NP
	15-6625-1	Installation—Forward inboard shroud (RH)	All	NP
3	15-6625-2	Shroud Assembly—Spotweld (LH inboard)	All	1
	15-6625-3	Shroud Assembly—Spotweld (RH inboard)	All	1
	15-6624	Installation—Forward outboard shroud	All	NP
4	15-6624-1	Shroud Assembly—Spotweld	All	1
	15-7609	Installation—Carburetor intake cover	All	NP
	15-7609-4	Cover Assembly—Carburetor intake	All	1
5	15-7609-1	Cover Assembly—Spotweld	All	1
	1-19076	Support Assembly—Cowl (LH)	All	1
6	1-19076-4	Support Assembly—Weld	All	1
7	1-28758-1	Clamp—Half	All	1
	1-19076-1	Support Assembly—Cowl (RH)	All	1
8	1-19076-5	Support Assembly—Weld	All	1
9	1-28758-1	Clamp—Half	All	1
	3-13803-2	Support Assembly—Cowl (outboard)	All	1
10	3-13803-10	Support Assembly—Weld	All	1
11	1-28758-1	Clamp—Half	All	1
	3-13803-3	Support Assembly—Cowl (outboard)	All	1
12	3-13803-11	Support Assembly—Weld	All	1
13	1-28758-1	Clamp—Half	All	1
	3-13803	Support Assembly—Cowl (LH inboard)	All	1
14	3-13803-8	Support Assembly—Weld	All	1
15	1-28758-1	Clamp—Half	All	1
	3-13803-1	Support Assembly—Cowl (RH inboard)	All	1
16	3-13803-9	Support Assembly—Weld	All	1
17	1-28758-1	Clamp—Half	All	1
	3-13802-1	Support Assembly—Cowl (LH inboard)	All	1
18	3-13802-5	Support Assembly—Weld	All	1
19	1-28758-1	Clamp—Half	All	1
	3-13802	Support Assembly—Cowl (RH inboard)	All	1
20	3-13802-4	Support Assembly—Weld	All	1
21	1-28758-1	Clamp—Half	All	1
	15-7664	Installation—Inboard engine cowling (LH)	All	NP
	15-7664-1	Installation—Inboard engine cowling (RH)	All	NP
	55-7672	Segment Assembly—Cowling	All	3
22	55-7672-400	Segment Assembly—Front	All	1
23	55-7672-1	Segment Assembly—Rear	All	1
	15-7674	Segment Assembly—Cowling (LH inboard)	All	1
	15-7674-1	Segment Assembly—Cowling (RH inboard)	All	1
24	15-7674-2	Segment Assembly—Rear (LH inboard)	All	1
	15-7674-3	Segment Assembly—Rear (RH inboard)	All	1
25	15-7674-4	Segment Assembly—Forward (LH inboard)	All	1
	15-7674-5	Segment Assembly—Forward (RH inboard)	All	1
	15-7675-22	Segment Assembly (LH inboard cowling)	All	1
	15-7675-23	Segment Assembly (RH inboard cowling)	All	1
26	15-7675-4	Segment Assembly—Forward (LH inboard)	All	1
	15-7675-5	Segment Assembly—Forward (RH inboard)	All	1
27	15-7675-24	Segment Assembly—Rear (with access door) (LH inboard)	All	1
	15-7675-25	Segment Assembly—Rear (with access door) (RH inboard)	All	1
	65-7672	Segment Assembly—Inboard cowling (LH)	All	1
28	65-7672-503	Segment Assembly (front LH)	All	1
29	65-7672-500	Segment Assembly (rear LH)	All	1
	15-7667	Installation—Outboard cowling	All	NP
	15-7672	Segment Assembly—Cowling	All	3
30	15-7672-5	Segment Assembly—Front	All	1
31	15-7672-1	Segment Assembly—Rear	All	1
	15-7673-22	Segment Assembly (outboard cowling LH)	All	1
32	15-7673-4	Segment Assembly—Forward (LH)	All	1
33	15-7673-23	Segment Assembly—Rear (LH)	All	1
	15-7673-1	Segment Assembly—Outboard cowling (RH)	All	1
34	15-7673-5	Segment Assembly—Forward (RH)	All	1
35	15-7673-3	Segment Assembly—Rear (RH)	All	1

PUBLISHED BY AVIALOGS.COM

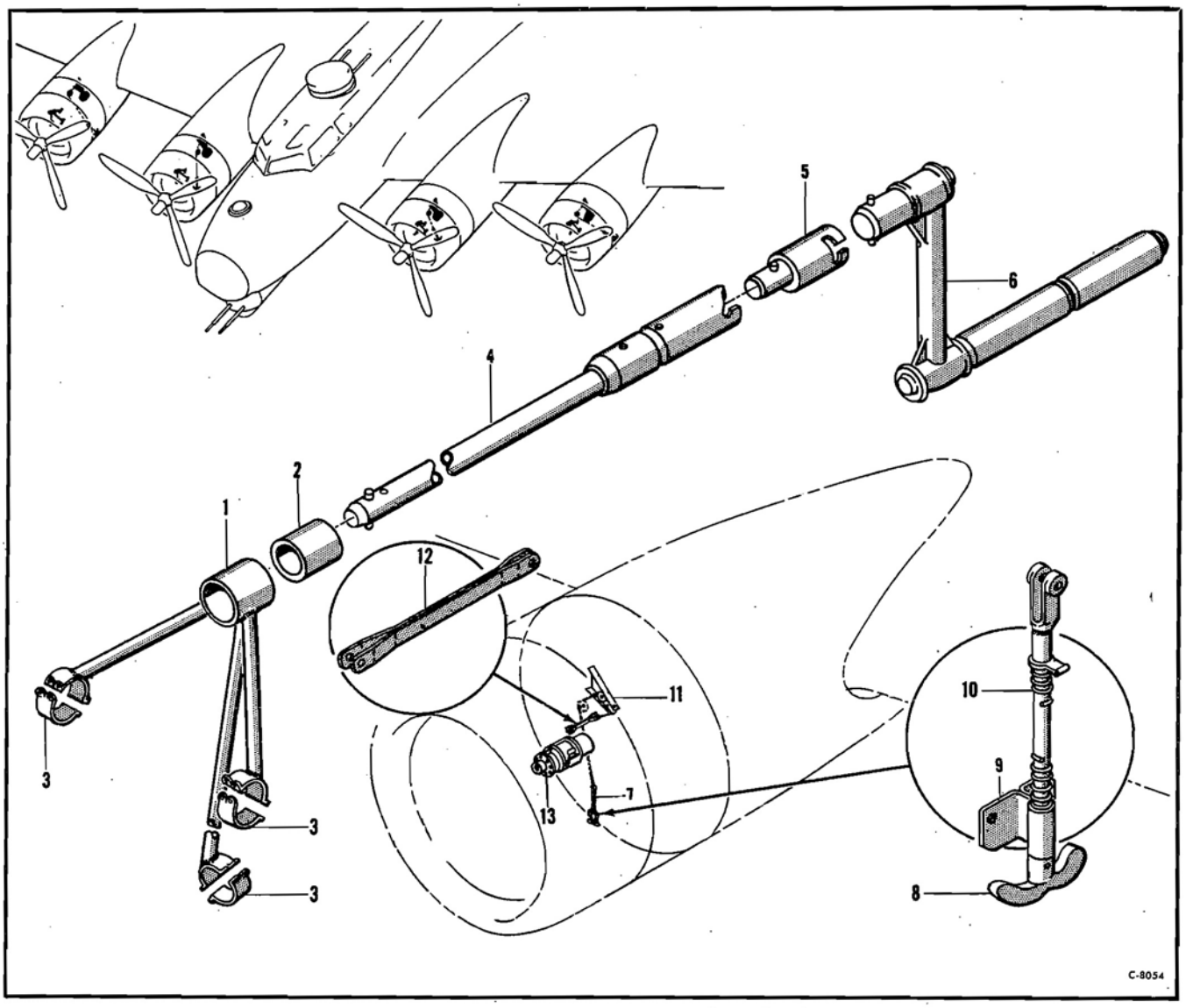

Figure 184—Engine Starter Control and Support

Engine Starter Control and Support

Figure & Index No.	Part Number	1 2 3 4 5 6 7 Nomenclature	Usage Code	Units Per Assy.
		Engine Starter Control and Support		
	14-1820	Installation—Starter crank support (see fig. 177)	HG	NP
	14-1820-7	Support Assembly—Starter crank	HG	1
184-1	14-1820-8	Support Assembly—Starter crank	FG	1
	14-1820-15	Support Assembly—Starter crank	TG	1
2	A1512-2	Bushing (Kingwell Bros.)	HG	1
3	BAC569-20HF	Clamp Assembly—1 wide round tube double	FG	3
	1-28758-1	Clamp—Half	TG	3
4	3-12408	Extension Assembly—Starter crank (see fig. 69)	HG	Ref
5	3-23558	Extension Assembly—Starter crank (see fig. 69)	HG	Ref
6	AN4098-1	Crank—Inertia starter hand (GFE) (see fig. 69)	HG	Ref
	15-9752	Installation—Starter control (LH outboard)	HG	NP
	15-9753	Installation—Starter control (LH inboard)	HG	NP
	15-9754	Installation—Starter control (RH inboard)	HG	NP
	15-9755	Installation—Starter control (RH outboard)	HG	NP
7	3-12788-6	Handle Assembly —Starter control	HG	1
8	1-4795	Handle—Control	HG	1
9	51-213-11	Guide Assembly—Starter control	HG	1
10	1-17235	Spring—Compression	HG	1
11	9-5060-1	Bracket Assembly—Starter control	HG	1
12	3-16950	Link Assembly—Starter control (see fig. 177)	HG	1
13	915-4C	Starter (Type G-6) (Eclipse) GFE (see fig. 177)	HG	Ref
	14-3569	Installation—Starter crank support (see fig. 185)	HE	NP

PUBLISHED BY AVIALOGS.COM

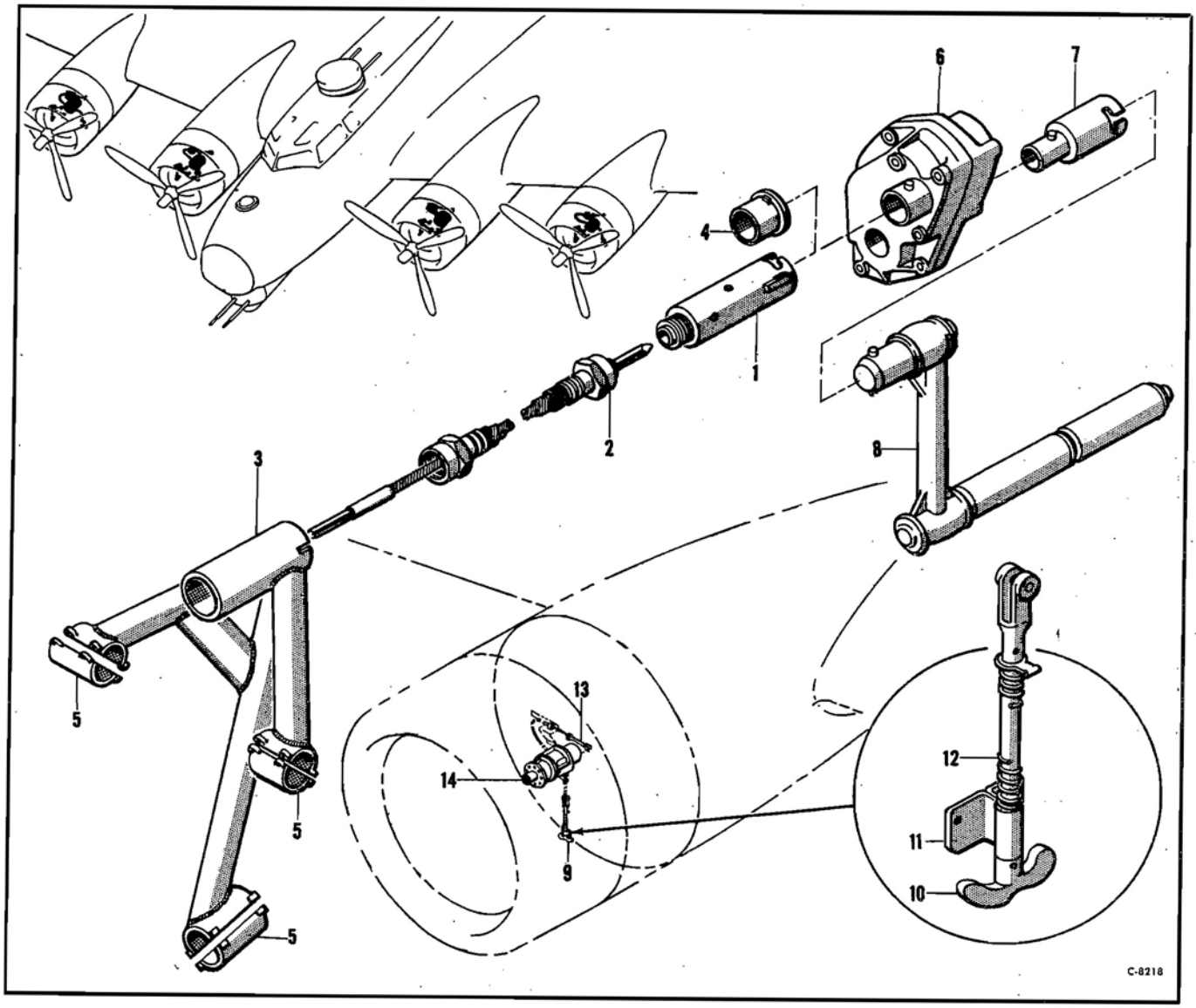

Figure 185—Engine Starter Control and Support

Engine Starter Control and Support

Figure & Index No.	*Part Number*	*1 2 3 4 5 6 7* *Nomenclature*	*Usage Code*	*Units Per Assy.*
		Engine Starter Control and Support		
	14-3569	Installation—Starter crank support (see fig. 177)	HE	NP
	14-3569-1	Support Assembly—Starter crank	HE	1
	14-3569-2	Shaft and Casing Assembly	HE	1
185-1	3-20398	Socket Assembly	HE	1
2	JH1197	Socket and Casing (Jack and Heintz) GFE	HE	1
3	9-6015	Support Assembly—Starter crank	HE	1
4	JH1271	Cover Assembly (Jack and Heintz) GFE	HE	1
5	3-20414-1	Clamp Assembly—Starter support	HE	3
6	AN4097-1	Box—Hand crank gear GFE (see fig. 69)	HE	1
7	3-23558	Extension Assembly—Starter crank (see fig. 69)	HE	Ref
8	AN4098-1	Crank—Inertia starter hand GFE (see fig. 69)	HE	Ref
	15-9752-1	Installation—Starter control nacelle no. 1	HE	NP
	15-9753-1	Installation—Starter control nacelle no. 2	HE	NP
	15-9754-1	Installation—Starter control nacelle no. 3	HE	NP
	15-9755-1	Installation—Starter control nacelle no. 4	HE	NP
9	3-12788-6	Handle Assembly—Starter control	HE	1
10	1-4795	Handle—Control	HE	1
11	51-213-11	Guide Assembly—Starter control	HE	1
12	1-17235	Spring—Compression	HE	1
13	3-16950	Link Assembly—Starter control (see fig. 177)	HE	Ref
14	JH3R	Starter GFE (see fig. 177)	HE	Ref
	14-1820	Installation—Starter crank support (see fig. 184)	HG	NP

PUBLISHED BY AVIALOGS.COM

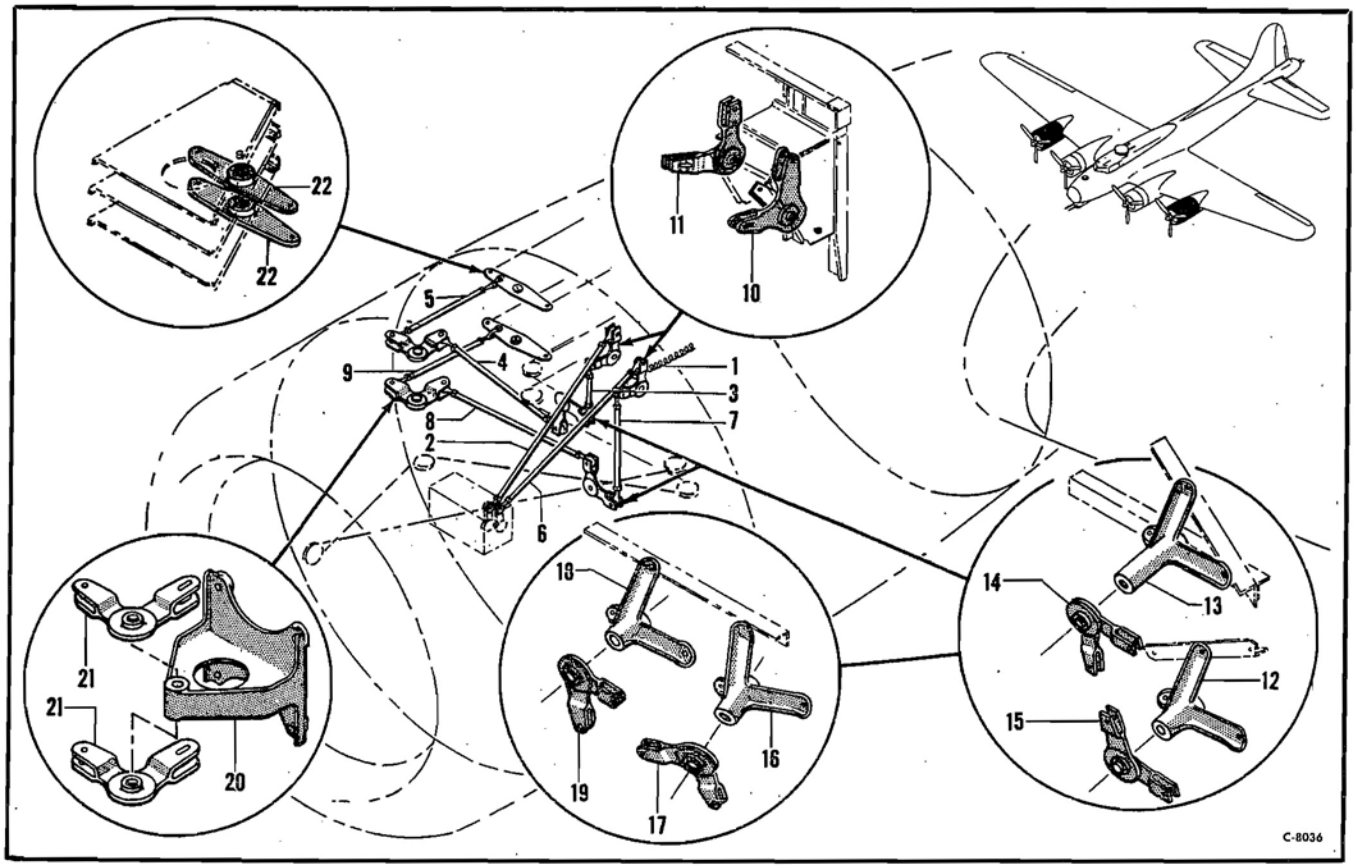

Figure 186—Outboard Engine Controls

Outboard Engine Controls

Figure & Index No.	Part Number	1 2 3 4 5 6 7 Nomenclature	Usage Code	Units Per Assy.
		Outboard Engine Controls		
	15-7035	Installation—Throttle controls	All	NP
	6-9494	Installation—Throttle control spring (LH outboard)	All	NP
	6-9490	Installation—Throttle control spring (RH outboard)	All	NP
186-1	1-18977	Spring—Throttle control (LH outboard)	All	1
	1-19070	Spring—Throttle control (RH outboard)	All	1
2	BAC1861-24-130	Rod Assembly	All	2
3	BAC1861-2-47	Rod Assembly (LH)	All	1
	BAC1861-23-97	Rod Assembly (RH)	All	1
4	BAC1861-24-289	Rod Assembly (LH)	All	1
	BAC1861-24-124	Rod Assembly (RH)	All	1
5	BAC1861-24-100	Rod Assembly	All	2
	15-7036	Installation—Mixture control	All	NP
6	BAC1861-23-75	Rod Assembly (LH)	All	1
	BAC1861-2-73	Rod Assembly (RH)	All	1
7	BAC1861-24-150	Rod Assembly (LH)	All	1
	BAC1861-24-148	Rod Assembly (RH)	All	1
8	BAC1861-24-291	Rod Assembly (LH)	All	1
	BAC1861-23-75	Rod Assembly (RH)	All	1
9	BAC1861-24-100	Rod Assembly	All	2
	9-3093	Installation—Throttle and mixture bracket (see fig. 15)	All	NP
10	3-13530	Crank Assembly—Control	All	1
11	3-8202-100	Crank Assembly	All	1
	59-3088	Installation—Throttle and mixture bracket (LH outboard) (see fig. 15)	All	NP
12	3-12003-2	Bracket—Engine control	All	1
13	3-12004	Bracket—Engine control	All	1
14	3-12090-1	Crank Assembly—Control	All	1
15	3-8202-99	Crank Assembly—Control	All	1
	9-3087	Installation—Throttle and mixture bracket (RH outboard) (see fig. 15)	All	NP
	9-3087-29	Bracket Assembly—Throttle and mixture	All	1
16	3-12003-4	Bracket—Engine control	All	1
17	3-12090	Crank Assembly—Control	All	1
	9-3087-30	Bracket Assembly—Throttle and mixture	All	1
18	3-12003-1	Bracket—Engine control	All	1
19	3-12090	Crank Assembly—Control	All	1
	55-6336	Installation—Engine control bracket (LH outboard) (see fig. 15)	All	NP
	15-7688-33	Bracket Assembly—Engine control (RH outboard) (see fig. 15)	All	Ref
20	3-12071	Bracket—Engine control (LH outboard)	All	1
	3-12071-1	Bracket—Engine control (RH outboard)	All	1
21	3-12090-2	Crank Assembly—Control	All	2
	55-6191	Installation—Engine control bracket (LH outboard) (see fig. 15)	All	NP
	55-6191-1	Installation—Engine control bracket (RH outboard) (see fig. 15)	All	NP
22	3-1210-2	Arm Assembly—Engine control (LH outboard)	All	2
	3-1210-4	Arm Assembly—Engine control (RH outboard)	All	2

PUBLISHED BY AVIALOGS.COM

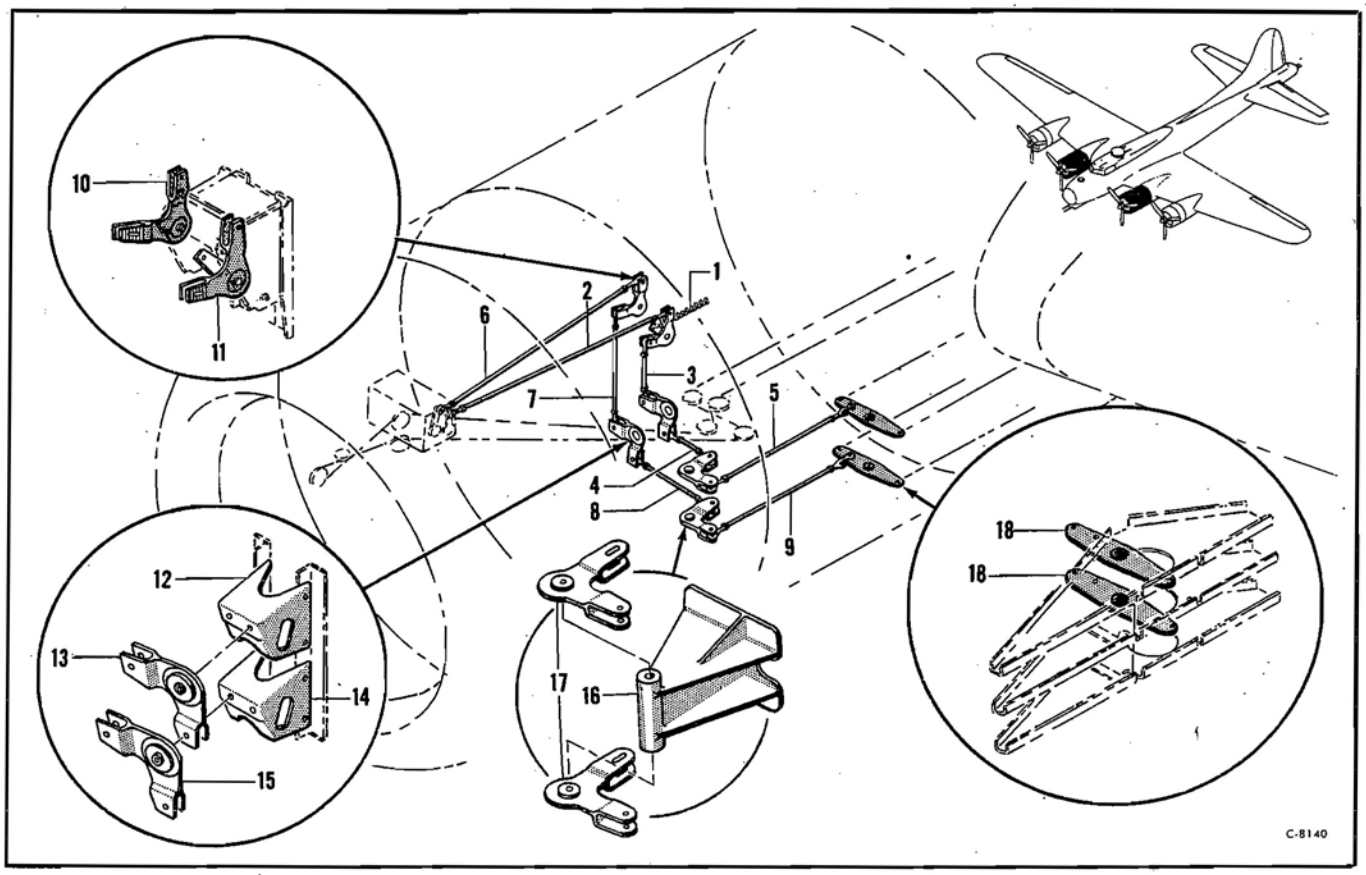

Figure 187—Inboard Engine Controls

Inboard Engine Controls

Figure & Index No.	Part Number	1 2 3 4 5 6 7 Nomenclature	Usage Code	Units Per Assy.
		Inboard Engine Controls		
	15-7035	Installation—Throttle control	All	NP
	6-9502	Installation—Throttle control spring (LH inboard)	All	NP
	6-9480	Installation—Throttle control spring (RH inboard)	All	NP
187-1	1-18977	Spring—Throttle control	All	1
2	BAC1861-24-136	Rod Assembly	All	2
3	BAC1861-2-55	Rod Assembly	All	2
4	BAC1861-2-72	Rod Assembly (LH)	All	1
	BAC1861-24-326	Rod Assembly (RH)	All	1
5	BAC1861-24-179	Rod Assembly	All	2
	15-7036	Installation—Mixture control	All	NP
6	BAC1861-23-78	Rod Assembly	All	2
7	BAC1861-24-126	Rod Assembly	All	2
8	BAC1861-23-83	Rod Assembly (LH)	All	1
	BAC1861-24-315	Rod Assembly (RH)	All	1
9	BAC1861-24-179	Rod Assembly	All	2
	6-8314-18	Installation—Throttle and mixture bracket (LH inboard) (see fig. 13)	All	NP
	6-8315	Installation—Throttle and mixture bracket (RH inboard) (see fig. 13)	All	NP
10	3-8202-100	Crank Assembly—Control	All	1
11	3-13504-13	Crank Assembly—Control (LH inboard)	All	1
	3-12090-14	Crank Assembly—Control (RH inboard)	All	1
	6-8311	Installation—Throttle and mixture controls bracket (LH inboard) (see fig. 13)	All	NP
	6-8311-1	Installation—Throttle and mixture controls bracket (RH inboard) (see fig. 13)	All	NP
	6-8311-14	Bracket Assembly—Throttle and mixture controls (LH inboard)	All	1
	6-8311-13	Bracket Assembly—Throttle and mixture controls (RH inboard)	All	1
12	3-12057-1	Bracket—Control	All	1
13	3-12090-1	Crank Assembly—Control (LH inboard)	All	1
	3-12090-13	Crank Assembly—Control (RH inboard)	All	1
	6-8311-12	Bracket Assembly—Control	All	1
14	3-12057	Bracket—Control	All	1
15	3-12090-1	Crank Assembly—Control	All	1
	55-6330	Installation—Firewall bracket (LH inboard) (see fig. 13)	All	NP
	55-6331	Installation—Firewall bracket (RH inboard) (see fig. 13)	All	NP
16	6-8265	Bracket—Engine controls (LH inboard)	All	1
	6-8265-1	Bracket—Engine controls (RH inboard)	All	1
17	3-12090-2	Crank Assembly—Control	All	2
	65-6044	Installation—Engine control bracket (LH inboard) (see fig. 13)	All	NP
	65-6044-1	Installation—Engine control bracket (RH inboard) (see fig. 13)	All	NP
18	3-12210	Arm Assembly—Control	All	2

PUBLISHED BY AVIALOGS.COM

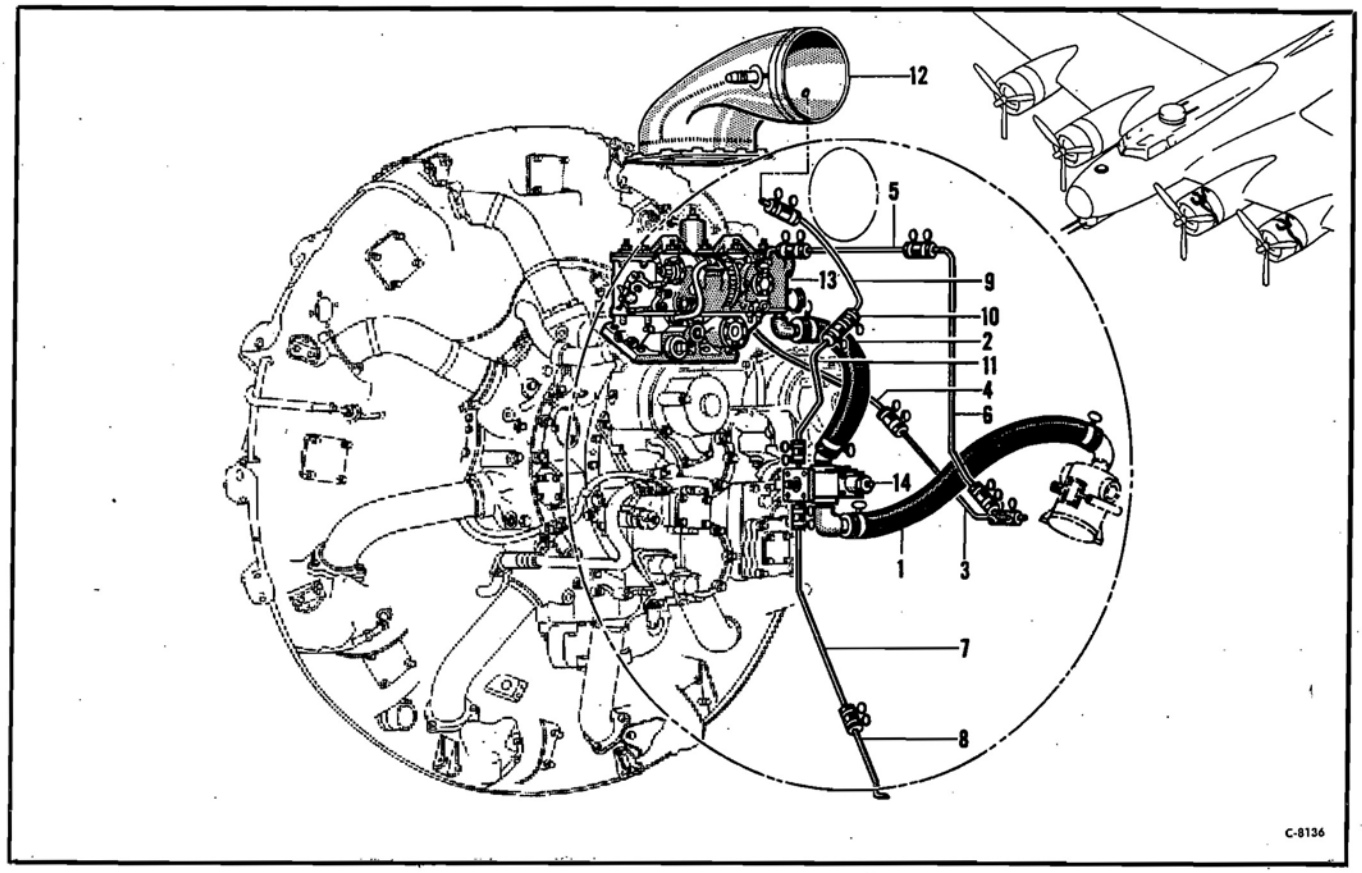

Figure 188—LH Outboard and Inboard Engine Fuel System

LH Outboard and Inboard Engine Fuel System

Figure & Index No.	*Part Number*	*1 2 3 4 5 6 7 Nomenclature*	*Usage Code*	*Units Per Assy.*
		LH Outboard and Inboard Engine Fuel System		
	15-9471	Installation—Fuel tubing	All	NP
188-1	15-7348-10	Hose (strainer to pump)	All	1
	15-7348-11	Hose (strainer to pump)	All	1
2	15-7348-14	Hose (pump to carburetor)	All	2
3	15-7348-28	Tube Assembly (outboard) (primer)	All	1
	15-7348-38	Tube Assembly (inboard) (primer)	All	1
4	15-7348-39	Tube Assembly (primer)	FC	2
	15-9471-102	Tube Assembly (primer)	QO	2
	811CT4	Elbow	FC	2
	AN842-4	Elbow—90 degree hose	QO	2
5	15-7348-67	Tube Assembly (outboard) (vapor)	All	1
	15-7348-72	Tube Assembly (inboard) (vapor)	GC	1
	15-9471-93	Tube Assembly (inboard) (vapor)	RO	1
	AN842-4	Elbow—90 degree	XA	2
	AN840-4	Adapter—Hose to pipe thread	PK	2
6	15-7348-66	Tube Assembly (outboard only) (vapor)	LC	1
	15-9471-108	Tube Assembly (outboard only) (vapor)	MP	1
7	15-7348-89	Tube Assembly (fuel pump drain)	All	2
8	15-7348-90	Tube Assembly (fuel pump drain)	All	2
9	15-7348-84	Tube Assembly (fuel pump valve relief)	All	2
10	AN878-4-24	Hose—Synthetic (fuel pump valve relief)	All	2
11	15-7348-85	Tube Assembly (fuel pump valve relief)	All	2
12	9-3080-22	Elbow Assembly—Carburetor pressure duct (see fig. 33 and 34)	All	Ref
13	PD12H2	Carburetor (Stromberg) (furnished with engine)	All	Ref
14	AN4101-1	Pump—Power driven fuel (Type G-9) GFE (see fig. 177)	All	Ref

PUBLISHED BY AVIALOGS.COM

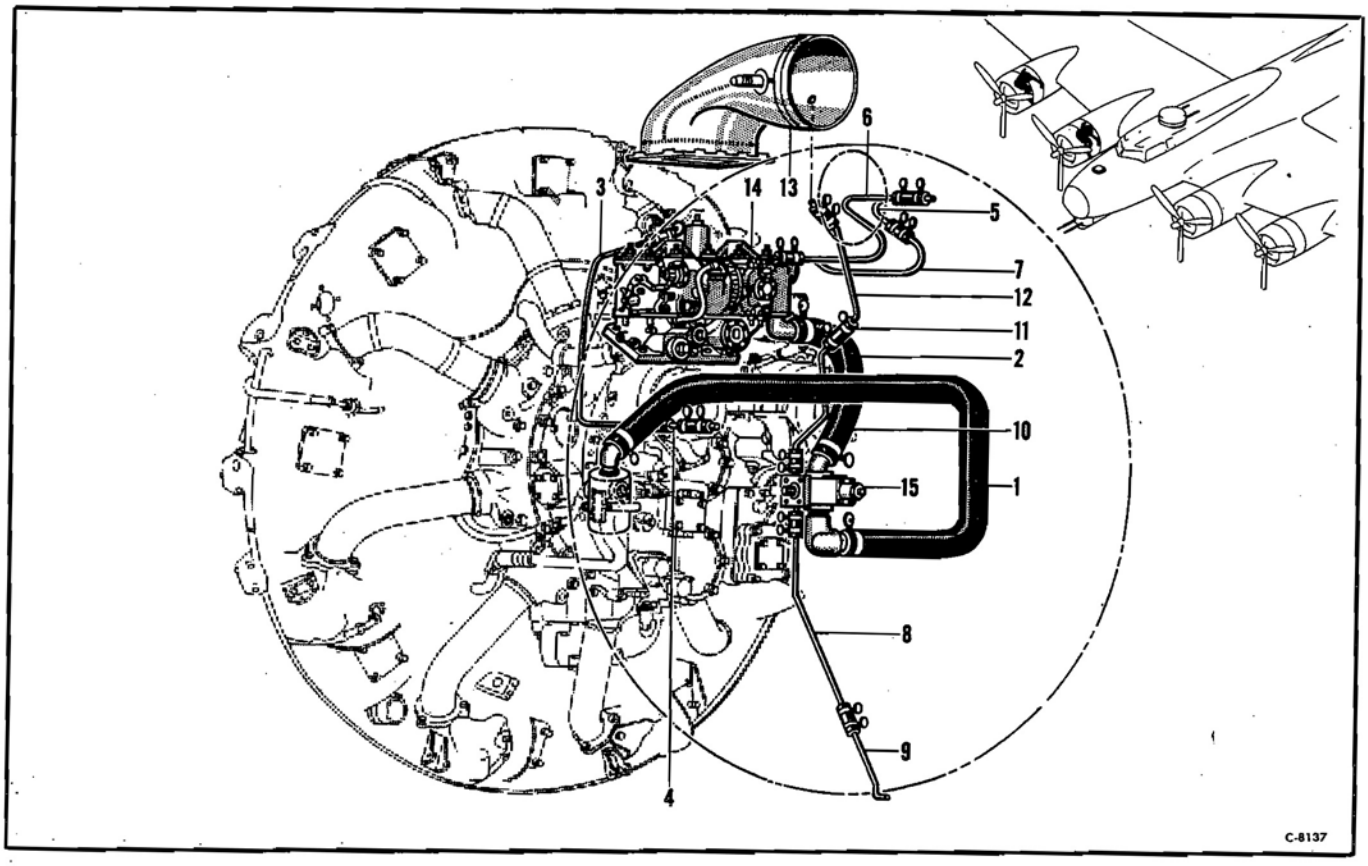

Figure 189—RH Inboard and Outboard Engine Fuel System

RH Inboard and Outboard Engine Fuel System

Figure & Index No.	*Part Number*	*1 2 3 4 5 6 7 Nomenclature*	*Usage Code*	*Units Per Assy.*
		RH Inboard and Outboard Engine Fuel System		
	15-9471	Installation—Fuel tubing	All	NP
189-1	15-7348-12	Hose (strainer to pump)	All	1
	15-7348-13	Hose (strainer to pump)	All	1
2	15-7348-14	Hose (pump to carburetor)	All	2
3	55-7348-407	Tube Assembly (primer)	FC	2
	15-9471-103	Tube Assembly (primer)	QO	2
4	15-7348-47	Tube Assembly (inboard)	All	1
	15-7348-60	Tube Assembly (outboard)	All	1
	811CT4	Elbow	FC	2
	AN842-4	Elbow—90 degree hose	QO	2
5	15-7348-77	Tube Assembly (inboard) (vapor)	XA	1
	15-9471-91	Tube Assembly (inboard) (vapor)	OK	1
	15-7348-83	Tube Assembly (outboard) (vapor)	XA	1
	15-9471-92	Tube Assembly (outboard) (vapor)	PK	1
	AN842-4	Elbow—90 degree	XA	2
	AN840-4	Adapter—Hose to pipe thread	PK	2
6	15-9471-97	Tube Assembly (inboard) (vapor) (replaces index no. 5 and 7 inboard)	RO	1
7	15-7348-118	Tube Assembly (inboard) (vapor)	GC	1
	15-7348-82	Tube Assembly (outboard) (vapor)	LC	1
	15-9471-107	Tube Assembly (outboard) (vapor)	MP	1
8	15-7348-91	Tube Assembly (inboard) (fuel pump drain)	All	1
	15-7348-116	Tube Assembly (outboard) (fuel pump drain)	All	1
9	15-7348-92	Tube Assembly (inboard) (fuel pump drain)	All	1
	15-7348-93	Tube Assembly (outboard) (fuel pump drain)	All	1
10	15-7348-84	Tube Assembly (fuel pump valve relief)	All	1
11	AN878-4-24	Hose—Synthetic (fuel pump valve relief)	All	1
12	15-7348-85	Tube Assembly (fuel pump valve relief)	All	1
13	9-3080-22	Elbow Assembly—Carburetor pressure duct (see fig. 33 and 34)	All	Ref
14	P12H2	Carburetor (Stromberg) (furnished with engine)	All	Ref
15	AN4101-1	Pump—Power driven fuel (Type G-9) GFE (see fig. 177)	All	Ref

PUBLISHED BY AVIALOGS.COM

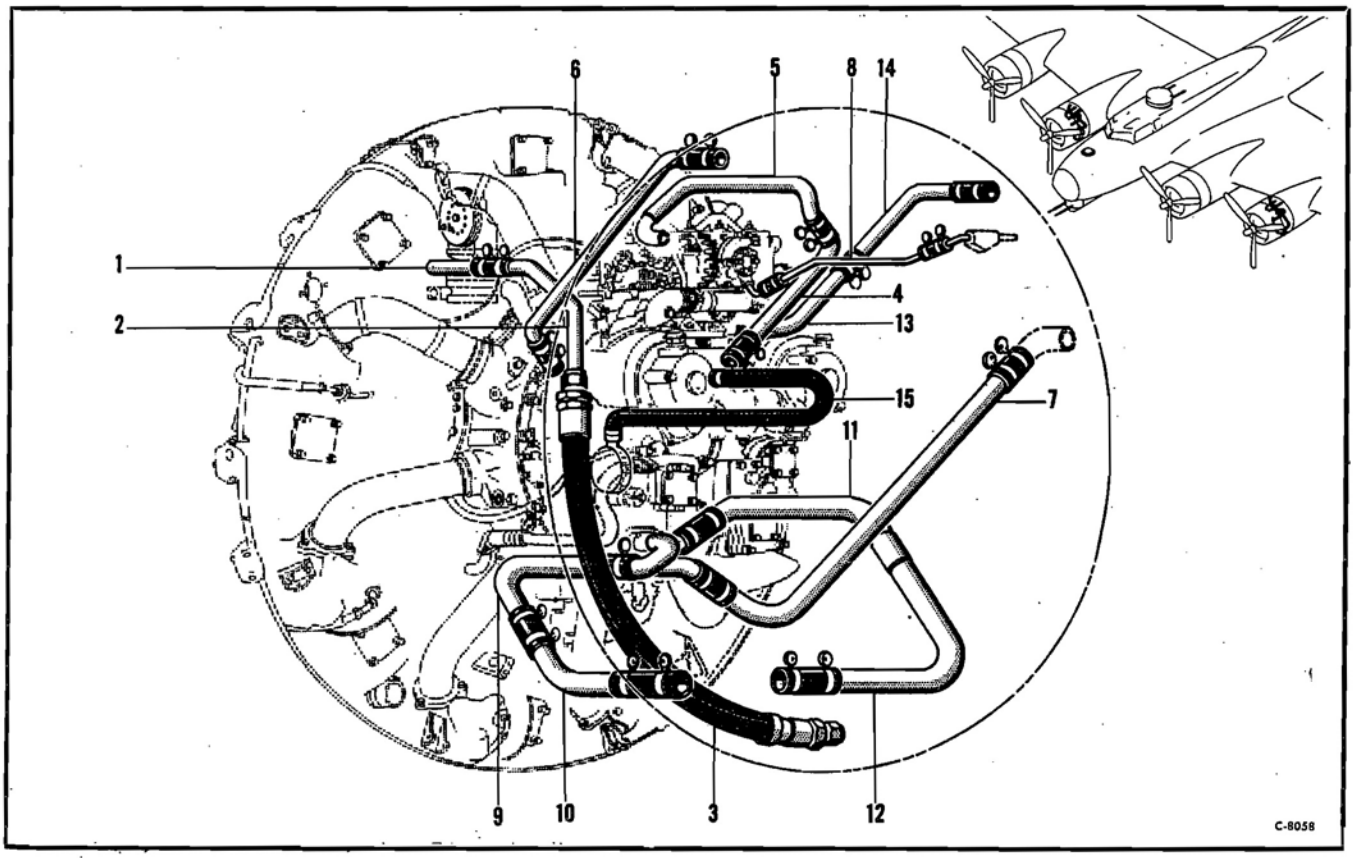

Figure 190—LH Outboard and RH Inboard Engine Oil System

LH Outboard and RH Inboard Engine Oil System

Figure & Index No.	*Part Number*	*1 2 3 4 5 6 7 Nomenclature*	*Usage Code*	*Units Per Assy.*
		LH Outboard and RH Inboard Engine Oil System		
	15-9470	Installation—Oil system	All	NP
190-1	65-6242-696	Tube Assembly (Propeller feathering)	All	2
	811HT12NS	Union	All	2
2	65-6242-636	Tube Assembly (Propeller feathering) (LH outboard)	All	1
	65-6242-634	Tube Assembly (Propeller feathering) (RH inboard)	All	1
3	39G1030-12W30	Hose—Flexible (Propeller feathering)	All	2
4	55-6242-41	Tube Assembly (vent line) (LH outboard)	All	1
	15-9470-8	Tube Assembly (vent line) (RH inboard)	GC	1
5	55-6242-42	Tube Assembly (vent line) (LH outboard)	All	1
	55-6242-537	Tube Assembly (vent line) (RH inboard)	GC	1
	811CT8	Elbow—90 degree	All	2
6	15-9470-5	Tube Assembly (vent line) (LH outboard)	All	1
	15-9470-1	Tube Assembly (vent line) (RH inboard)	All	1
7	15-9470-26	Tube Assembly (to oil cooler) (LH outboard)	All	1
	15-9470-34	Tube Assembly (to oil cooler) (RH inboard)	All	1
	AN842-21	Elbow—90 degree hose (to engine)	All	2
	AN844-21	Elbow—45 degree hose (to firewall)	All	2
8	65-6242-646	Tube Assembly (oil dilution to engine) (LH outboard)	All	1
	65-6242-648	Tube Assembly (oil dilution to engine) (RH inboard)	All	1
	1-24222-30	Fitting Assembly (LH outboard)	All	1
9	3-16922	Tube Assembly—"Y" (oil tank to engine)	IB	2
	15-9470-192	Tube Assembly (oil tank to engine)	TL	2
	AN914-8	Elbow—90 degree	All	2
	AN842-21	Elbow—90 degree hose (to engine)	All	2
10	55-6242-499	Tube Assembly (oil tank to engine)	All	2
	AN840-21	Adapter—Hose to pipe thread	All	2
11	15-9470-60	Tube Assembly (oil tank to pump) (RH inboard)	IB	1
12	15-9470-61	Tube Assembly (oil tank to pump) (RH inboard)	IB	1
	15-9470-27	Tube Assembly (oil tank to pump) (replaces index No. 11 and 12 on LH outboard	IB	1
13	15-9470-229	Tube Assembly (RH inboard only)	RO	1
	AN917-3	Tee—Plain type (RH inboard only)	All	1
	AN911-3	Nipple—Hex (RH inboard only)	All	1
14	15-9470-230	Tube Assembly (RH inboard only)	RO	1
	811CT8	Elbow—90 degree	RO	1
	15-11692	Installation—Transmitter (LH outboard)	All	NP
15	AN878-4-146	Hose—Synthetic	All	1
	15-11694	Installation—Transmitter (RH inboard)	All	NP
	AN878-4-136	Hose-Synthetic	All	1

RESTRICTED
PUBLISHED BY AVIALOGS.COM

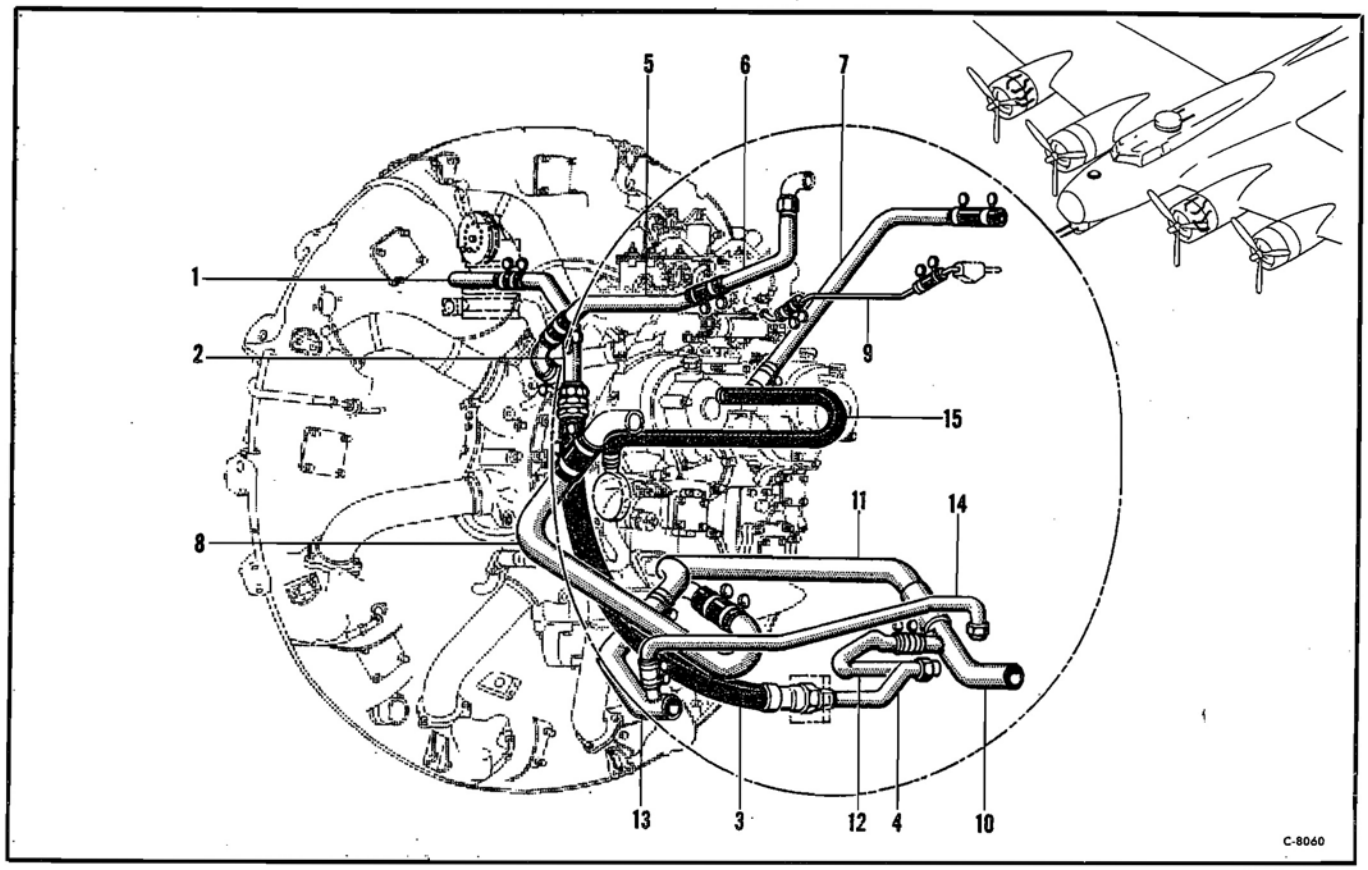

Figure 191—LH Inboard and RH Outboard Engine Oil System

LH Inboard and RH Outboard Engine Oil System

Figure & Index No.	*Part Number*	*1 2 3 4 5 6 7* *Nomenclature*	*Usage Code*	*Units Per Assy.*
		LH Inboard and RH Outboard Engine Oil System		
	15-9470	Installation—Oil system	All	NP
191-1	65-6242-696	Tube Assembly—Propeller feathering	All	2
2	65-6242-634	Tube Assembly (LH inboard)	All	1
	65-6242-636	Tube Assembly (RH outboard)	All	1
3	39G1030-12W27	Hose—Flexible (LH inboard)	All	1
	39G1030-12W24	Hose—Flexible (RH outboard)	All	1
4	65-6242-655	Tube Assembly (propeller feathering) (LH inboard)	All	1
	65-6242-660	Tube Assembly (propeller feathering) (RH outboard)	All	1
5	15-9470-11	Tube Assembly (vent line) (LH inboard)	GC	1
	15-9470-224	Tube Assembly (vent line)	RO	1
	15-9470-14	Tube Assembly (vent line) (RH outboard)	All	1
6	55-6242-515	Tube Assembly (vent line) (LH inboard)	GC	1
	15-9470-225	Tube Assembly (vent line)	RO	1
	55-6242-512	Tube Assembly (vent line) (RH outboard)	All	1
7	15-9470-2	Tube Assembly (vent line) (LH inboard)	All	1
	15-9470-13	Tube Assembly (vent line) (RH outboard)	All	1
8	15-9470-17	Tube Assembly (engine to oil cooler) (LH inboard)	All	1
	65-6242-659	Tube Assembly (engine to oil cooler) (RH outboard)	All	1
9	65-6242-647	Tube Assembly (oil dilution to engine) (LH inboard)	All	1
	65-6242-649	Tube Assembly (oil dilution to engine) (RH outboard)	All	1
10	3-16923	Tube Assembly—Propeller feathering "Y" (LH inboard)	T	1
	3-19973	Tube Assembly—Propeller feathering "Y" (RH outboard)	T	1
	6-16360	Tube Assembly—Propeller feathering "Y" (RH outboard)	IG	1
	15-9470-236	Tube Assembly (oil tank to engine) (RH outboard)	TL	1
11	65-6242-654	Tube Assembly (oil tank to engine) (LH inboard)	T	1
	15-9470-41	Tube Assembly (oil tank to engine) (RH outboard)	T	1
	15-9470-145	Tube Assembly (oil tank to engine) (LH inboard)	IG	1
12	65-6242-653	Tube Assembly (propeller feathering) (LH inboard)	T	1
	65-6242-701	Tube Assembly (propeller feathering) (RH outboard)	T	1
	15-9470-146	Tube Assembly (propeller feathering) (RH outboard)	IG	1
13	6-16359	Tube Assembly—Propeller feathering "Y" (LH inboard)	IG	1
	15-9470-206	Tube Assembly (oil tank to engine) (LH inboard)	TL	1
14	15-9470-144	Tube Assembly (propeller feathering) (LH inboard)	IG	1
	AN878-8-10	Hose—Synthetic	All	1
	15-11693	Installation—Transmitter (LH inboard)	All	NP
15	AN878-4-118	Hose—Synthetic	All	1
	15-11695	Installation—Transmitter (RH outboard)	All	NP
	AN878-4-122	Hose—Synthetic	All	1

PUBLISHED BY AVIALOGS.COM

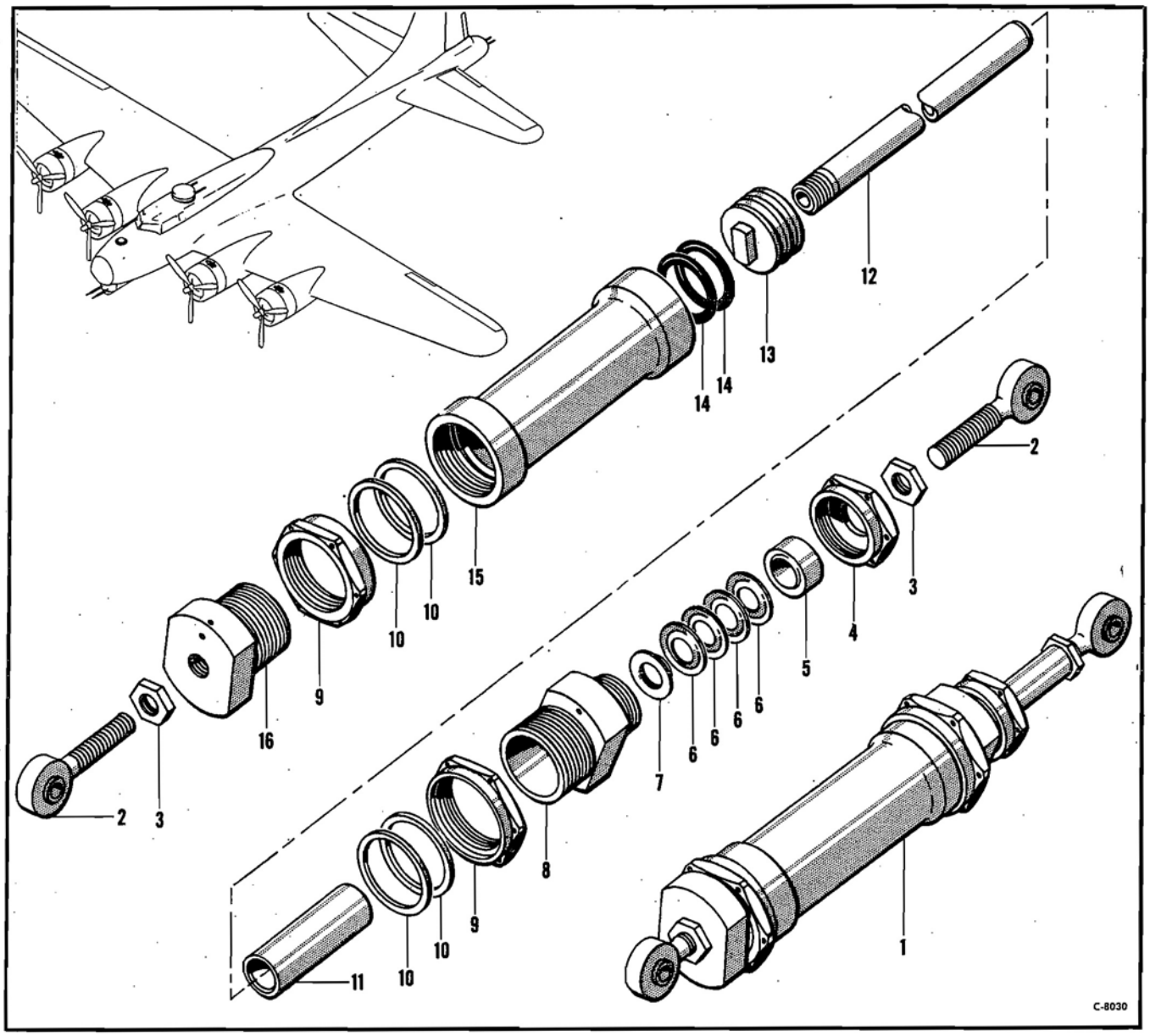

Figure 192—Cowl Flap Cylinder Assembly

Cowl Flap Cylinder Assembly

Figure & Index No.	*Part Number*	*1 2 3 4 5 6 7 Nomenclature*	*Usage Code*	*Units Per Assy.*
192-1	6-9447	Cylinder Assembly—Cowl flap (see fig. 182)	All	Ref
2	3-13767	End Assembly—Piston rod	All	2
3	AN316-7R	Nut—Aircraft check	All	2
4	1-21393	Nut—Packing gland	All	1
5	1-21399	Ring—Cowl flap cylinder	All	1
6	40B629-7-018	Ring—Packing	All	4
7	1-21958	Ring—End packing	All	1
8	3-13766	End—Cowling flap cylinder	All	1
9	1-18603	Nut—Packing gland	All	2
10	1-21956	Washer—Cowl flap cylinder	All	4
11	1-18604	Spacer—Piston rod	All	1
	3-13768	Piston Assembly—Cowl flap operating	All	1
12	3-13769	Rod—Cowl flap operating	All	1
13	1-18909	Piston—Cowl flap operating	All	1
14	41-7710	Ring—Sealing	All	2
15	3-13764	Cylinder—Cowl flap operating	All	1
16	3-13765	End—Cowling flap cylinder	All	1

RESTRICTED
PUBLISHED BY AVIALOGS.COM

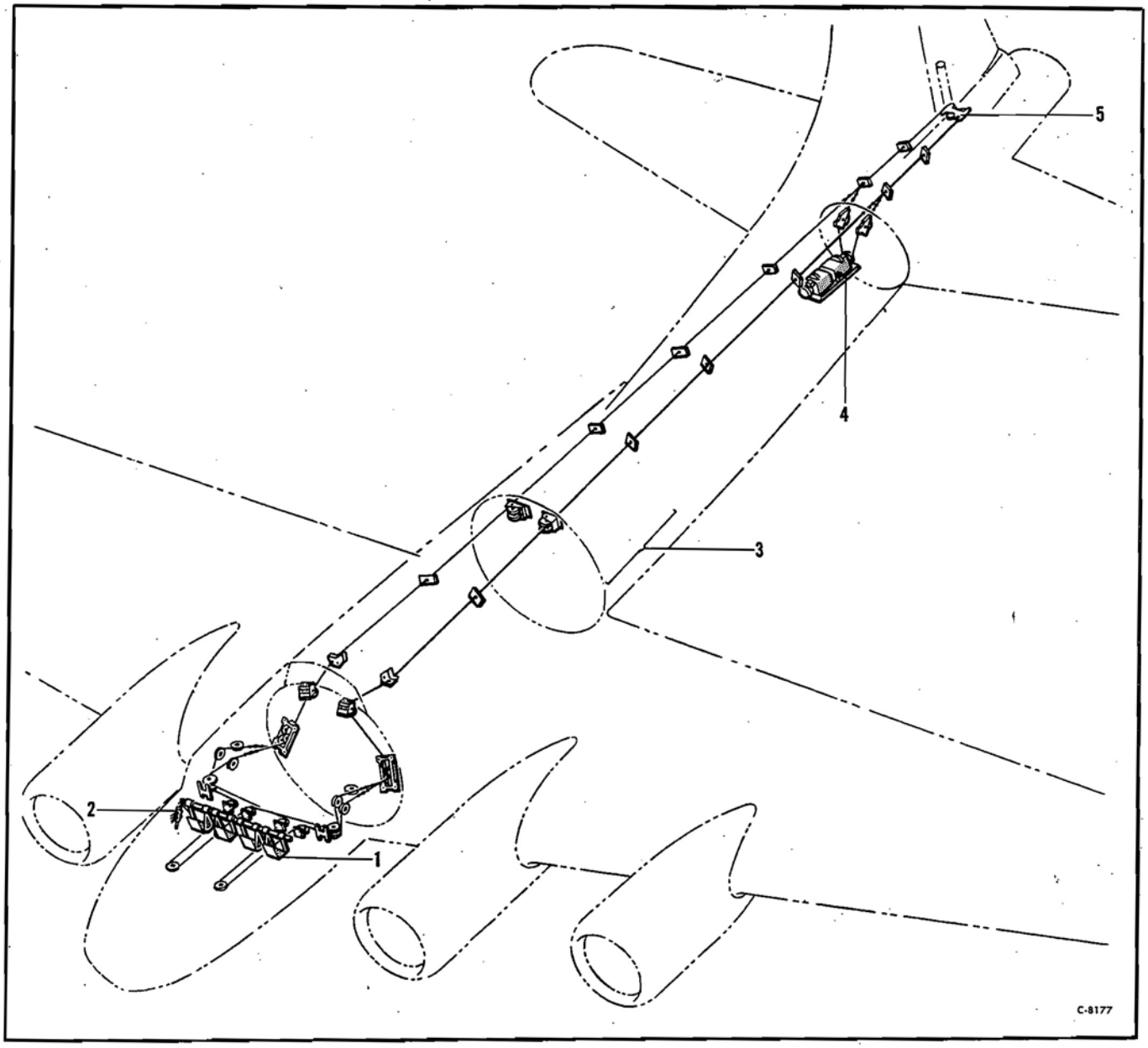

Figure 193—Rudder Control System

Rudder Control System

Figure & Index No.	*Part Number*	*1 2 3 4 5 6 7* *Nomenclature*	*Usage Code*	*Units Per Assy.*
		Rudder Control System		
	55-7031	Installation—Rudder controls	All	NP
193-1	75-3508	Installation—Rudder pedals (see fig. 92)	All	NP
2	64-1600	Installation—Brake control (see fig. 93)	All	NP
3		Rudder Controls—Fuselage (see fig. 89)		
4	3-15184	Installation—Rudder and elevator servo unit (see fig. 98)	All	NP
5	7-1515	Mast—Rudder control (see fig. 58)	All	Ref

PUBLISHED BY AVIALOGS.COM

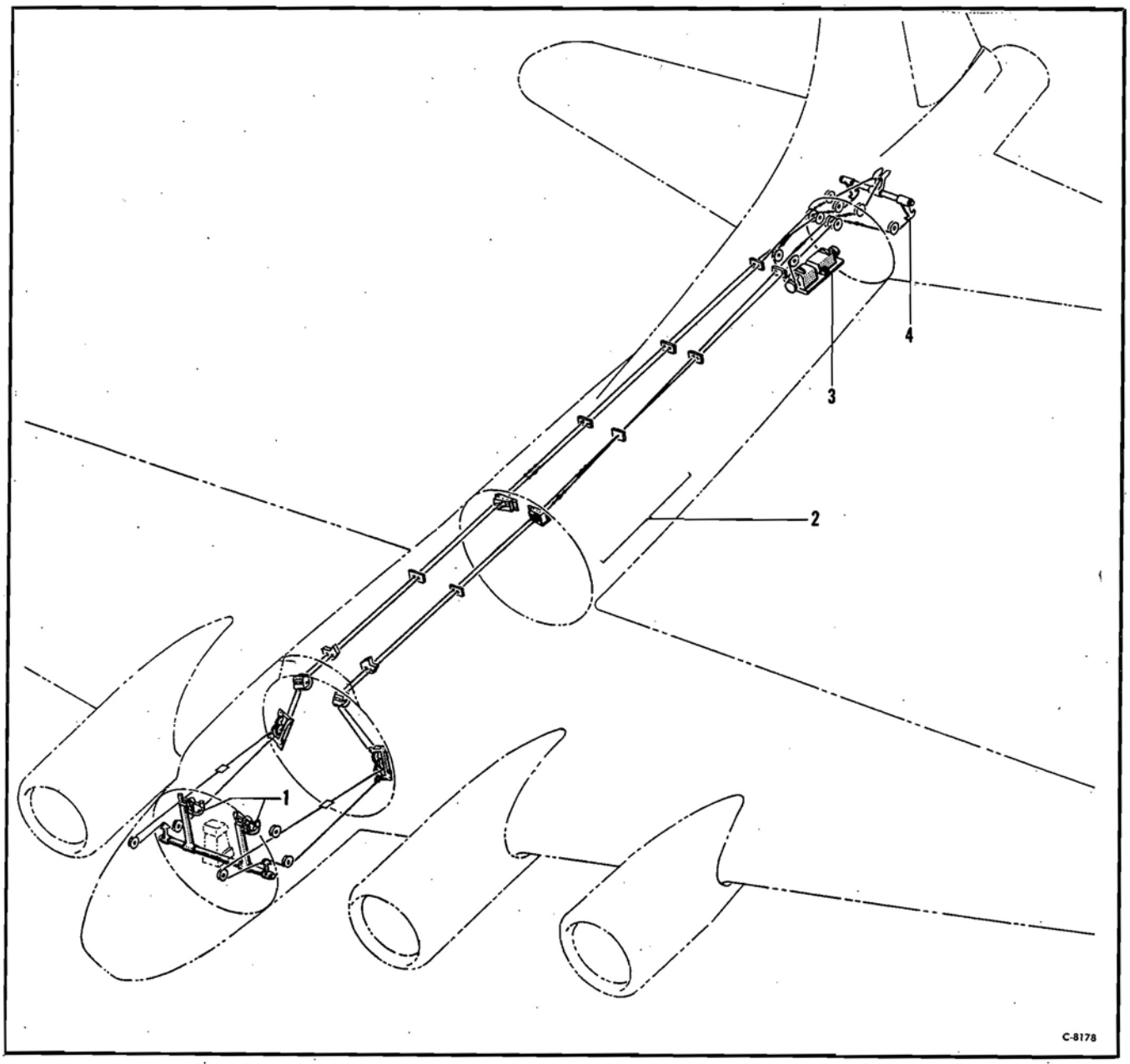

Figure 194—Elevator Control System

Elevator Control System

Figure & Index No.	*Part Number*	*1 2 3 4 5 6 7* *Nomenclature*	*Usage Code*	*Units Per Assy.*
		Elevator Control System		
	55-7032	Installation—Elevator controls	All	NP
194-1	15-8538	Installation—Aileron and elevator control column (see fig. 91)	All	NP
2		Elevator Controls—Fuselage (see fig. 88)		
3	3-15184	Installation—Rudder and elevator servo unit (see fig. 98)	All	NP
4	9-3664	Mast—Elevator control (see fig. 58)	All	Ref

PUBLISHED BY AVIALOGS.COM

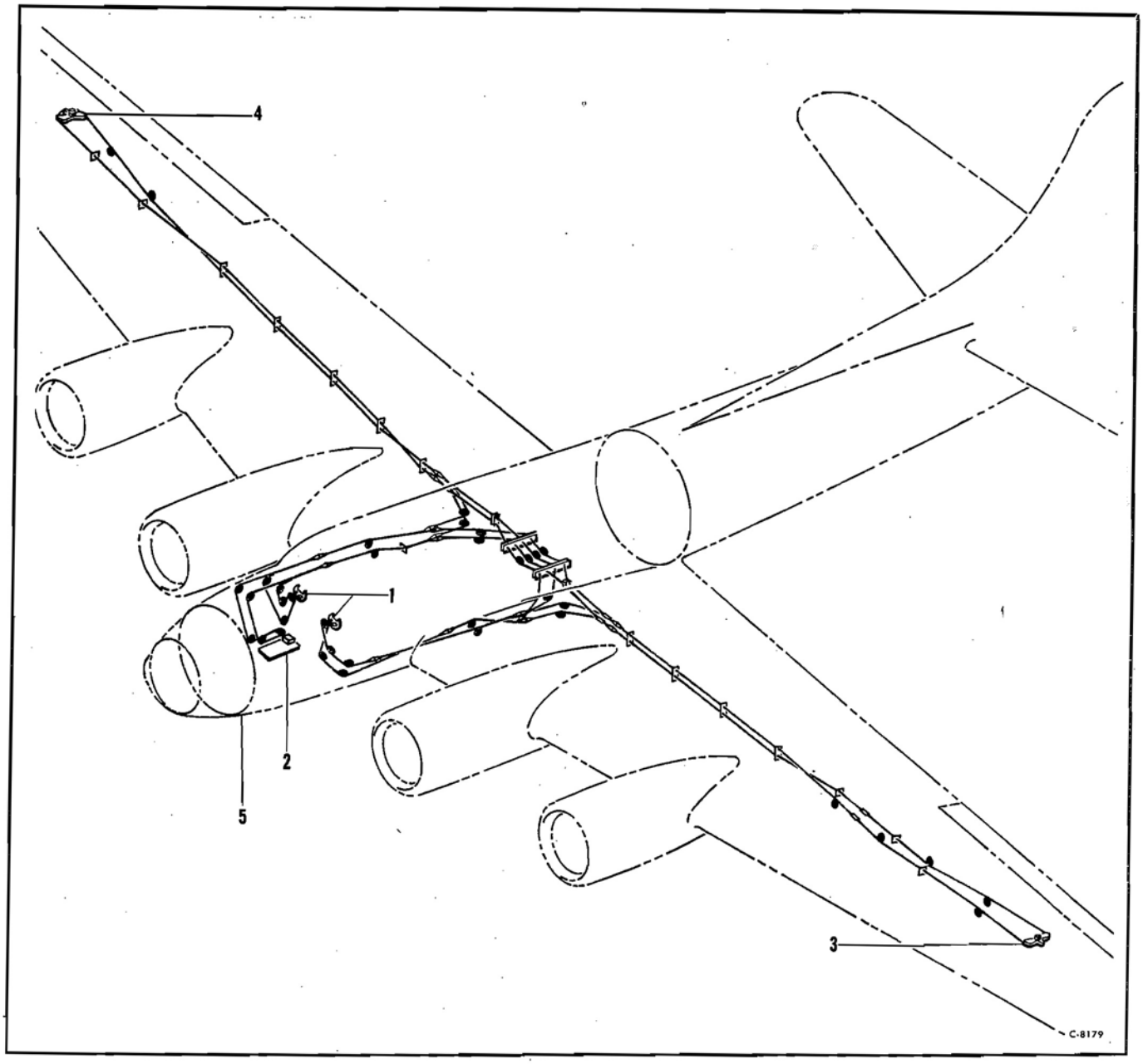

Figure 195—Aileron Control System

Aileron Control System

Figure & Index No.	*Part Number*	*1 2 3 4 5 6 7* *Nomenclature*	*Usage Code*	*Units Per Assy.*
		Aileron Control System		
	15-11162	Installation—Aileron control	All	NP
195-1	15-8538	Installation—Aileron and elevator control column (see fig. 91)	All	NP
2	3-15185	Installation—Aileron servo and converter unit (see fig. 98)	All	NP
3	8-1262-2	Quadrant Assembly—Aileron control (LH) (see fig. 6)	All	Ref
4	8-1262-3	Quadrant Assembly—Aileron control (RH) (see fig. 6)	All	Ref
5		Aileron Controls—Fuselage (see fig. 87)		

PUBLISHED BY AVIALOGS.COM

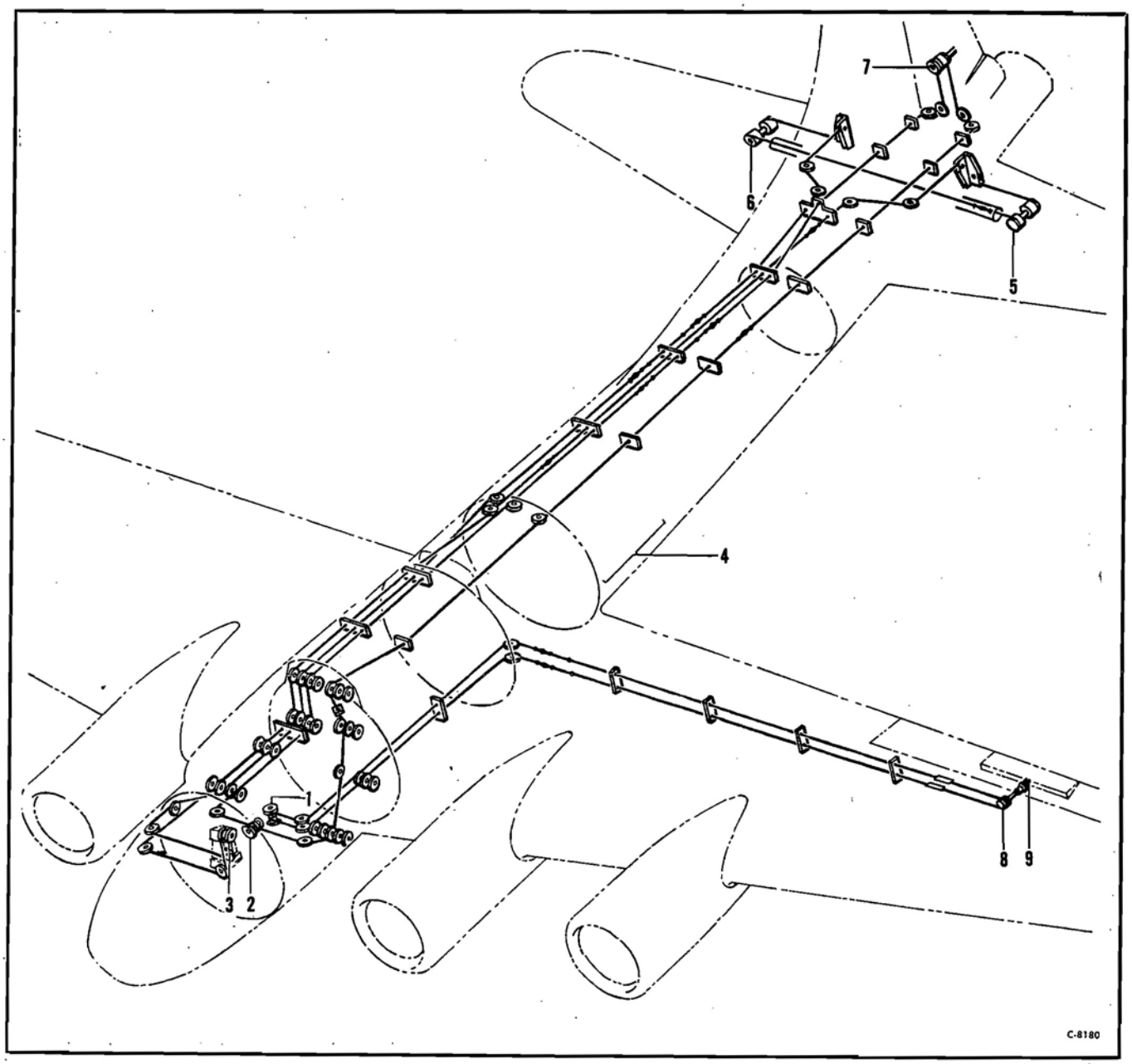

Figure 196—Tab Control System

Tab Control System

Figure & Index No.	*Part Number*	*1 2 3 4 5 6 7* *Nomenclature*	*Usage Code*	*Units Per Assy.*
		Tab Control System		
	55-7034	Installation—Aileron rudder and elevator trim tabs	All	NP
196-1	56-4965-506	Control Assembly—Aileron tab (see fig. 94)	All	Ref
2	9-5311	Installation—Rudder tab control (see fig. 90)	All	NP
3		Elevator Trim Tab Unit (see fig. 103)		
4		Tab Control—Fuselage (see fig. 90)		
5	55-7580	Installation—Elev trim tab control (LH) (see fig. 62)	All	NP
6	55-7580-1	Installation—Elev trim tab control (RH) (see fig. 62)	All	NP
7	15-9497	Control—Rudder trim tab (see fig. 63)	All	Ref
8	7-1531-31	Installation—Aileron tab control drum (see fig. 6)	All	NP
9	7-1536	Control Assembly—Aileron trim tab (LH aileron only) (see fig. 7)	All	Ref

PUBLISHED BY AVIALOGS.COM

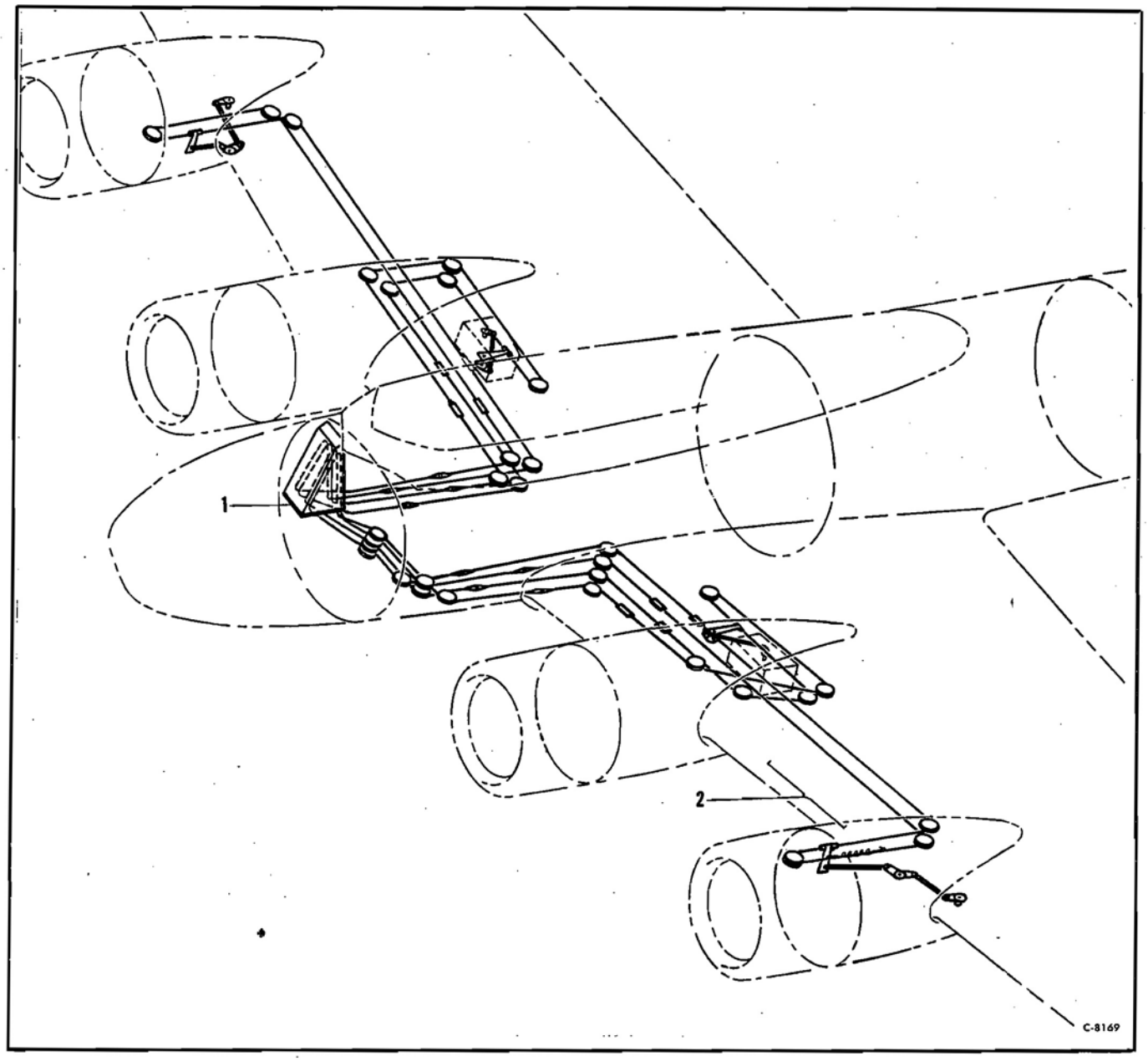

Figure 197—Intercooler Temperature Control

Intercooler Temperature Control

Figure & Index No.	*Part Number*	*1 2 3 4 5 6 7* *Nomenclature*	*Usage Code*	*Units Per Assy.*
	15-7038	Installation—Intercooler temperature control	All	NP
	55-6070	Installation—Intercooler temperature stand	All	NP
197-1	55-6070-400	Stand Assembly—Intercooler temperature control (see fig. 120)	All	1
2		Intercooler Temperature Control—Wing (see fig. 37)		

PUBLISHED BY AVIALOGS.COM

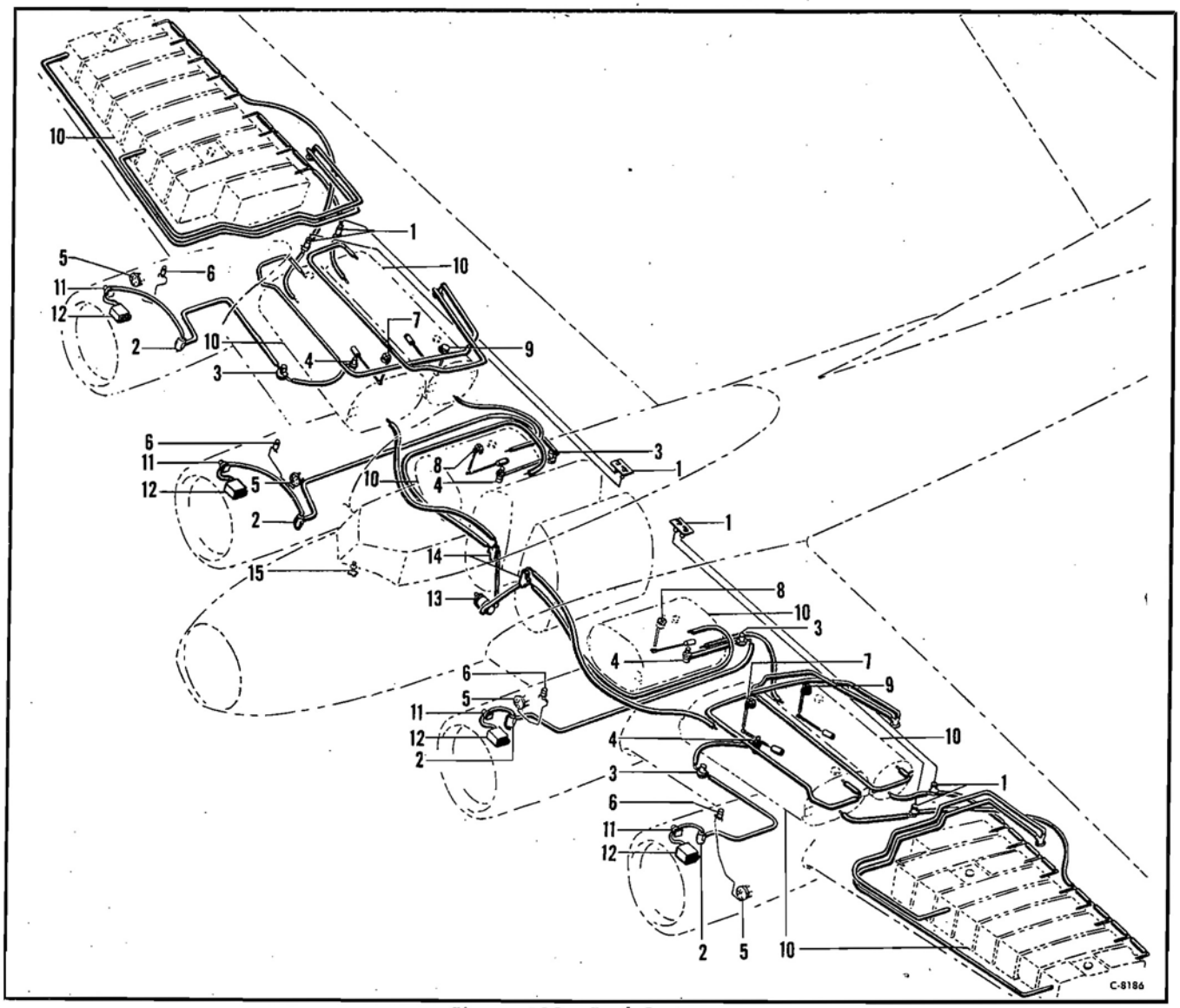

Figure 198—Fuel System

Fuel System

Figure & Index No.	Part Number	1 2 3 4 5 6 7 Nomenclature	Usage Code	Units Per Assy.
		Fuel System		
198-1	A855KX	Valve Assembly—Transfer control (Denison) GFE (see fig. 21)	D	Ref
	A855NX	Valve Assembly—Transfer control (E-5) (Denison) GFE (see fig. 21)	EE	Ref
	A855RX	Valve Assembly—Transfer control (D-5) (Denison) GFE (see fig. 22)	PJ	Ref
2	13960-3	Strainer Assembly—Type C-4 (Aero Supply) (see fig. 23)	All	Ref
3	2660	Valve Assembly—Fuel shut-off (Electrimatic) (see fig. 23)	All	Ref
4	TFD12000	Pump Assembly—Fuel booster (Thompson) (see T.O. 03-10EC-4) (see fig. 23)	All	Ref
5	NO NUMBER	Transmitter—Pressure (Type A-1) (Spec 27383-A) GFE (see fig. 23)	All	Ref
6	M441M2	Valve Assy—Oil dilution solenoid (Air Assoc.) (see T.O. 03-15-17) (see fig. 30)	RA	Ref
	UC1070	Valve—Solenoid (United Aircraft) (see T.O. 03-15-24) (see fig. 30)	SJ	Ref
7	EA15-10	Unit Assembly—Fuel gage (Liquidometer) (see fig. 25)	RF	Ref
	EA15W	Unit Assembly—Fuel gage (Liquidometer) (see fig. 25)	K	Ref
8	EA15-11	Unit Assembly—Fuel gage (Liquidometer) (see fig. 25)	NG	Ref
	EA15W	Unit Assembly—Fuel gage (Liquidometer) (see fig. 25)	T	Ref
9	EA15-12	Unit Assembly—Fuel gage (Liquidometer) (see fig. 25)	DG	Ref
	EA15W	Unit Assembly—Fuel gage (Liquidometer) (see fig. 25)	S	Ref
10		Wing Fuel Tanks (see fig. 24)		
11	AN4101-1	Pump—Power driven fuel (Type G-9) GFE (see fig. 177)	All	Ref
12	PD12H2	Carburetor (Stromberg) (furnished with engine)	All	Ref
13	RG4430-2	Pump Assembly—Fuel transfer (Romec) (see fig. 105)	All	Ref
14	940167	Valve—Fuel trans. sel (Type PG-4) (Aero Supply) (see AN03-10-39) (see fig. 106)	All	Ref
15	401-4A	Primer Assy—4 eng fuel (Parker) (see AN03-10-33) (see fig. 105)	All	Ref

PUBLISHED BY AVIALOGS.COM

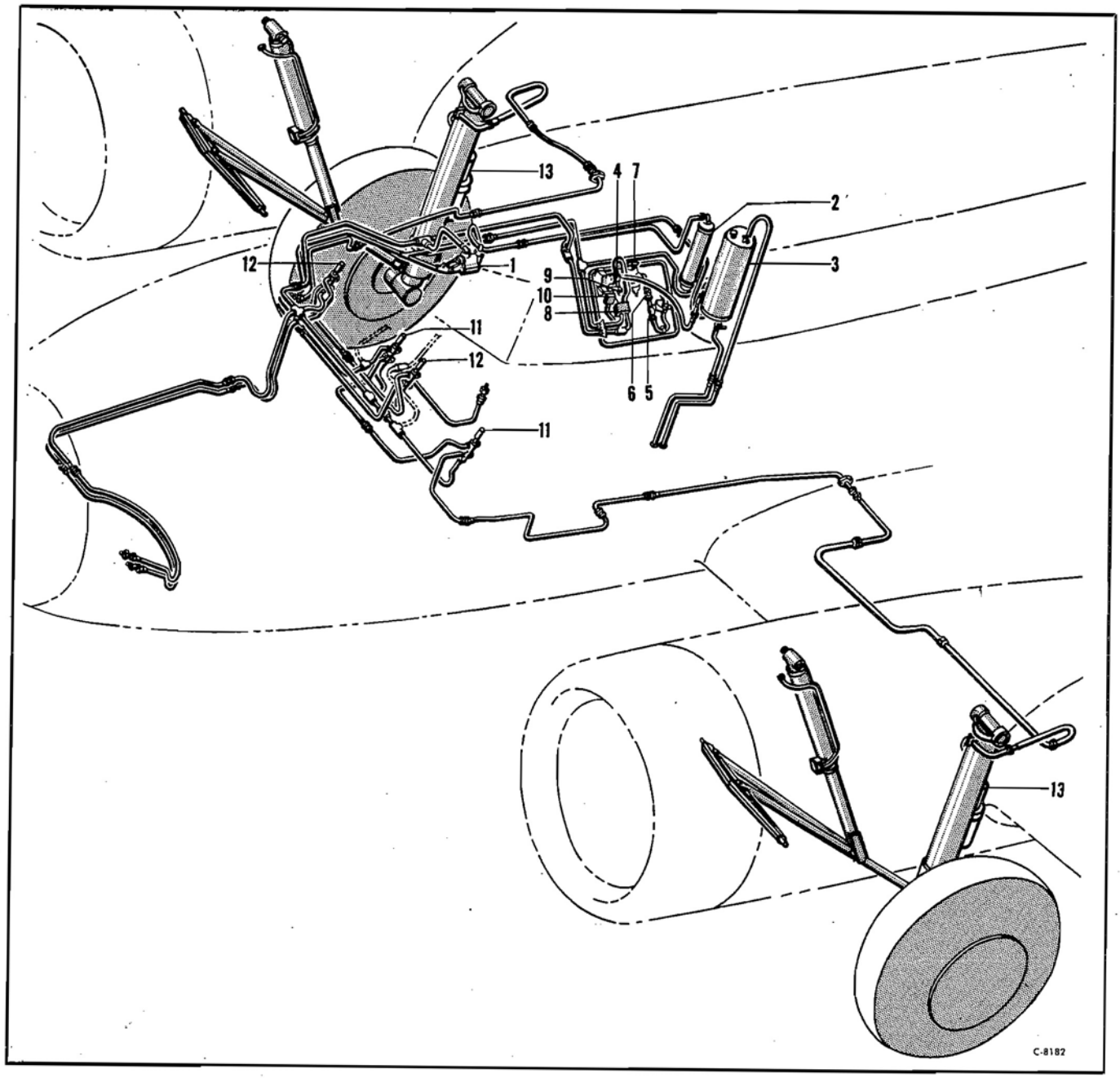

Hydraulic System

Figure 199—Hydraulic System

Figure & Index No.	Part Number	1 2 3 4 5 6 7 Nomenclature	Usage Code	Units Per Assy.
		Hydraulic System		
199-1	D10231	Pump—Hydraulic hand (Adel) (see fig. 124)	RC	Ref
	66-25507	Pump—Hydraulic hand (Harvill)	TP	Ref
2	6-13191-2	Accumulator Assembly (see fig. 123)	All	Ref
3	6-10440-12	Tank Assembly—Hydraulic reservoir (see fig. 123)	All	Ref
4	IE678	Pump—Hydraulic (Pesco) (see fig. 126)	All	Ref
5	401561	Valve—Check (Bendix) (see fig. 121)	All	Ref
6	5291-1T8D	Connection—Suction test (Parker) (see fig. 125)	All	Ref
7	27250	Purolator Assembly (Purolator) (see fig. 55)	All	Ref
8	7-500-8-1	Valve—Relief (Kenyon) (see fig. 125)	All	Ref
9	251-2GT8D	Valve—Shut-off (Parker) (see fig. 125)	All	Ref
10	151	Switch Assembly—Pressure regulating (Starbird) (see fig. 121)	All	Ref
11	3-9584-4	Valve Assembly—Wheel brake (see fig. 93)	All	Ref
12	3-9584-5	Valve Assembly—Wheel brake (see fig. 93)	All	Ref
13	15-10414	Installation—Landing gear and brakes (see fig. 166)	All	NP

PUBLISHED BY AVIALOGS.COM

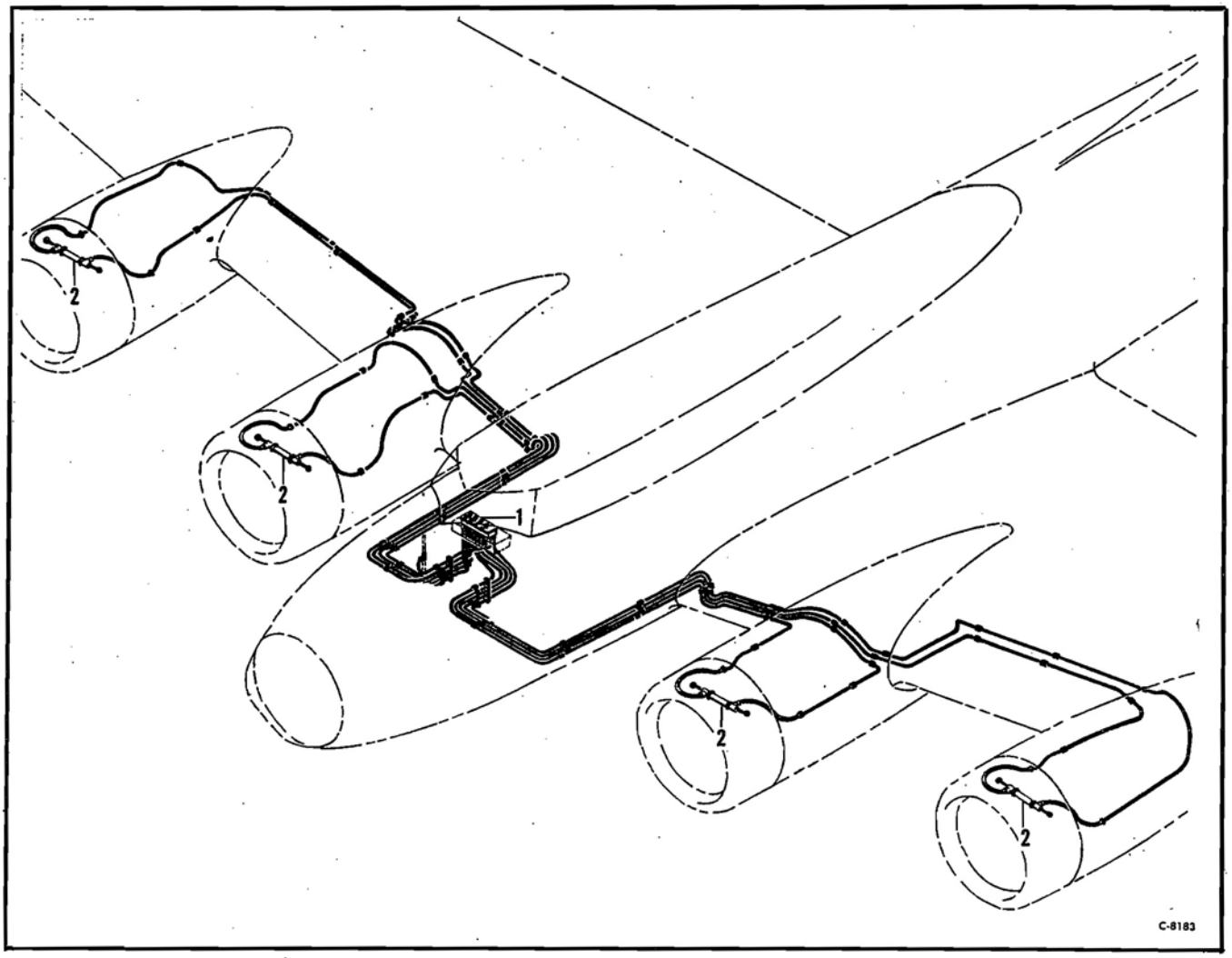

Figure 200—Cowl Flap System

Cowl Flap System

Figure & Index No.	*Part Number*	*1 2 3 4 5 6 7* *Nomenclature*	*Usage Code*	*Units Per Assy.*
		Cowl Flap System		
200-1	G10340	Valve—Cowl flap (Adel) (see fig. 112)	All	Ref
2	6-9447	Cylinder Assembly—Cowl flap (see fig. 192)	All	Ref

PUBLISHED BY AVIALOGS.COM

PUBLISHED BY AVIALOGS.COM

PUBLISHED BY AVIALOGS.COM

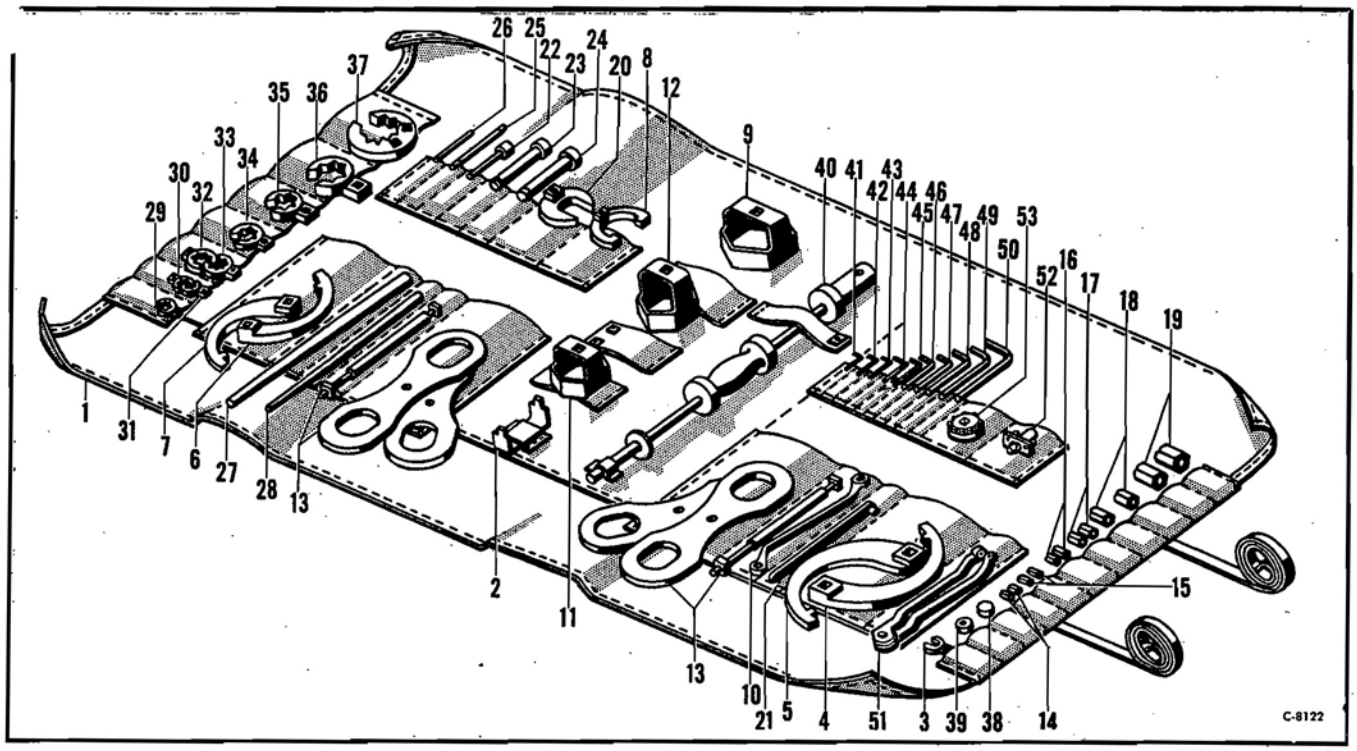

Figure 217—Major Overhaul Tool Kit Assembly

Major Overhaul Tool Kit Assembly

Figure & Index No.	Part Number	1 2 3 4 5 6 7 Nomenclature	Usage Code	Units Per Assy.
	F24000	Kit Assembly—Major overhaul tool		1
217-1	F24001	Roll Assembly—Major overhaul		1
2	F20200	Wrench—Fuel tank filler neck box		1
3	F20301	Wrench—Starter and generator crowfoot		1
4	F20410	Wrench—Main landing gear oleo packing nut spanner		1
5	F20411	Wrench—Main landing gear oleo lock ring spanner		1
6	F20412	Wrench—Tail wheel oleo lock ring spanner		1
7	F20413	Wrench—Tail wheel oleo packing nut spanner		1
8	F20510	Wrench—Retracting gear housing cap spanner		1
9	F20601	Wrench—Main landing gear wheel hub nut box		1
10	F20701	Wrench—Outer wing joint box		1
11	F20802	Wrench—Tail wheel axle nut box		1
12	F20803	Wrench—Oil tank filler neck box		1
13	F20900	Scissors—Main oleo retaining link (4 pieces)		2
14	F21001	Knockout—Taper pin (5-16 24 thread)		2
15	F21002	Knockout—Taper pin (3-8 24 thread)		2
16	F21003	Knockout—Taper pin (7-16 20 thread)		2
17	F21004	Knockout—Taper pin (9-16 18 thread)		2
18	F21005	Knockout—Taper pin (3-4 16 thread)		2
19	F21006	Knockout—Taper pin (7-8 14 thread)		2
20	F21126	Wrench—Oil return line crowfoot		1
21	F21200	Tool—Line up for outer to inner wing splice		1
22	F21601	Pin—Station 19 wing alignment		1
23	F21602	Pin—Inboard wing alignment		1
24	F21603	Pin—Station 1 wing alignment		1
25	F21701	Pin—Horizontal stabilizer alignment		1
26	F21702	Pin—Vertical stabilizer alignment		1
27	F21801	Punch—1 x 16 in. alignment		1
28	F21802	Punch—1-2 x 12 in. alignment		1
29	F21901	Wrench—9-16 in. crowfoot		1
30	F21902	Wrench—5-8 in. crowfoot		1
31	F21903	Wrench—11-16 in. crowfoot		1
32	F21904	Wrench—7-8 in. crowfoot		1
33	F21905	Wrench—1 in. crowfoot		1
34	F21906	Wrench—1 3-16 in. crowfoot		1
35	F21907	Wrench—1 1-2 in. crowfoot		1
36	F21908	Wrench—1 15-16 in. crowfoot		1
37	F21914	Wrench—15-16 in. crowfoot		1
38	F22101	Wrench—3-4 booter plug key		1
39	F22102	Wrench—7-8 booter plug key		1
40	F22600	Inserter and Puller—Landing gear pin		1
41	F23701	Wrench—Headless setscrew hexagon 1-16		1
42	F23702	Wrench—Headless setscrew hexagon 3-32		1
43	F23703	Wrench—Headless setscrew hexagon 1-8		1
44	F23704	Wrench—Headless setscrew hexagon 5-32		1
45	F23705	Wrench—Headless setscrew hexagon 3-16		1
46	F23706	Wrench—Headless setscrew hexagon 7-32		1
47	F23707	Wrench—Headless setscrew hexagon 1-4		1
48	F23709	Wrench—Headless setscrew hexagon 5-16		1
49	F23711	Wrench—Headless setscrew hexagon 3-8		1
50	F23715	Wrench—Headless setscrew hexagon 1-2		1
51	F61800	Wrench Assembly—Adjustable spanner		1
52	F21400	Wrench—Main landing gear adjusting nut		1
53	F21500	Wrench—Main landing gear screw gear		1

PUBLISHED BY AVIALOGS.COM

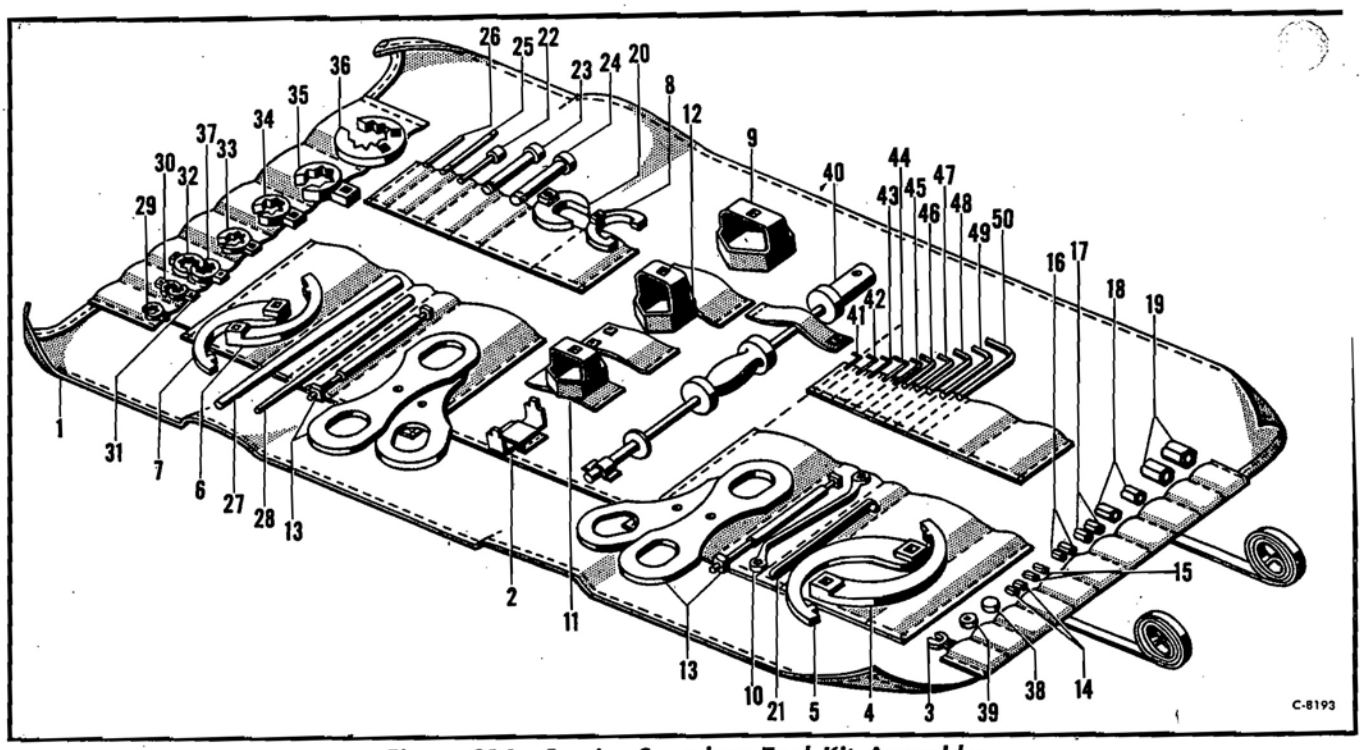

Figure 216—Service Squadron Tool Kit Assembly

Service Squadron Tool Kit Assembly

Figure & Index No.	Part Number	1 2 3 4 5 6 7 Nomenclature	Usage Code	U Per
	F23900	Kit Assembly—Service squadron tool		1
216-1	F23901	Roll Assembly—Service squadron		1
2	F20200	Wrench—Fuel tank filler neck box		1
3	F20301	Wrench—Starter and generator crowfoot		1
4	F20410	Wrench—Main landing gear oleo packing nut spanner		1
5	F20411	Wrench—Main landing gear oleo lock ring spanner		1
6	F20412	Wrench—Tail wheel oleo lock ring spanner		1
7	F20413	Wrench—Tail wheel oleo packing nut spanner		1
8	F20510	Wrench—Retracting gear housing cap spanner		1
9	F20601	Wrench—Main landing gear wheel hub nut box		1
10	F20701	Wrench—Outer wing joint box		1
11	F20802	Wrench—Tail wheel axle nut box		1
12	F20803	Wrench—Oil tank filler neck box		1
13	F20900	Scissors—Main oleo retaining link (4 pieces)		1
14	F21001	Knockout—Taper pin (5-16 24 thread)		2
15	F21002	Knockout—Taper pin (3-8 24 thread)		2
16	F21003	Knockout—Taper pin (7-16 20 thread)		2
17	F21004	Knockout—Taper pin (9-16 18 thread)		2
18	F21005	Knockout—Taper pin (3-4 16 thread)		2
19	F21006	Knockout—Taper pin (7-8 14 thread)		2
20	F21126	Wrench—Oil return line crowfoot		1
21	F21200	Tool—Line up for outer to inner wing splice		1
22	F21601	Pin—Station 19 wing alignment		1
23	F21602	Pin—Inboard wing alignment		1
24	F21603	Pin—Station 1 wing alignment		1
25	F21701	Pin—Horizontal stabilizer alignment		1
26	F21702	Pin—Vertical stabilizer alignment		1
27	F21801	Punch—1 x 16 in. alignment		1
28	F21802	Punch—1-2 x 12 in. alignment		1
29	F21901	Wrench—9-16 in. crowfoot		1
30	F21902	Wrench—5-8 in. crowfoot		1
31	F21903	Wrench—11-16 in. crowfoot		1
32	F21904	Wrench—7-8 in. crowfoot		1
33	F21905	Wrench—1 in. crowfoot		1
34	F21906	Wrench—1 3-16 in. crowfoot		1
35	F21907	Wrench—1 1-2 in. crowfoot		1
36	F21908	Wrench—1 15-16 in. crowfoot		1
37	F21914	Wrench—15-16 in. crowfoot		1
38	F22101	Wrench—3-4 booter plug key		1
39	F22102	Wrench—7-8 booter plug key		1
40	F22600	Inserter and Puller—Landing gear pin		1
41	F23701	Wrench—Headless setscrew hexagon 1-16		1
42	F23702	Wrench—Headless setscrew hexagon 3-32		1
43	F23703	Wrench—Headless setscrew hexagon 1-8		1
44	F23704	Wrench—Headless setscrew hexagon 5-32		1
45	F23705	Wrench—Headless setscrew hexagon 3-16		1
46	F23706	Wrench—Headless setscrew hexagon 7-32		1
47	F23707	Wrench—Headless setscrew hexagon 1-4		1
48	F23709	Wrench—Headless setscrew hexagon 5-16		1
49	F23711	Wrench—Headless setscrew hexagon 3-8		1
50	F23715	Wrench—Headless setscrew hexagon 1-2		1

PUBLISHED BY AVIALOGS.COM

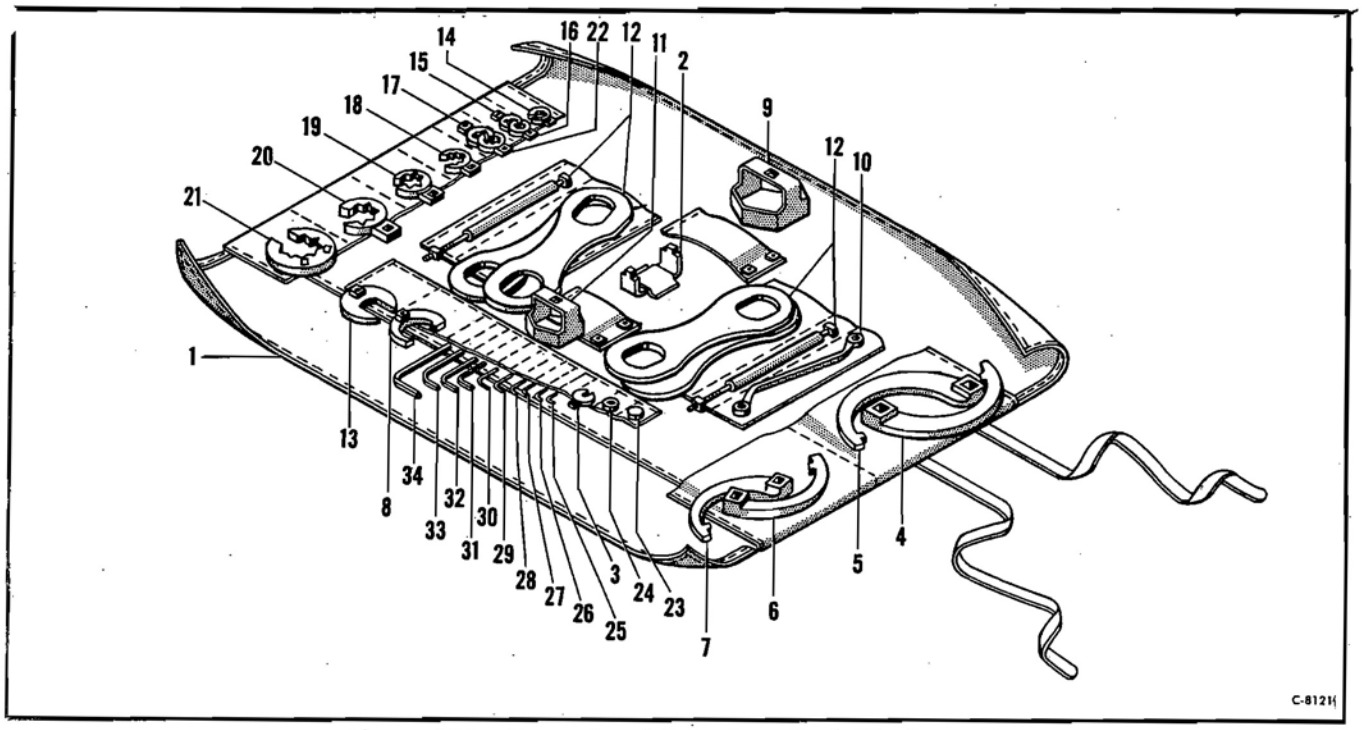

Figure 215—Operational Squadron Tool Kit Assembly

Operational Squadron Tool Kit Assembly

Figure & Index No.	*Part Number*	*1 2 3 4 5 6 7* *Nomenclature*	*Usage Code*	*Units Per Assy.*
	F23800	Kit Assembly—Operational squadron tool		1
215-1	F23801	Roll Assembly—Operational squadron		1
2	F20200	Wrench—Fuel tank filler neck box		1
3	F20301	Wrench—Starter and generator crowfoot		1
4	F20410	Wrench—Main landing gear oleo packing nut spanner		1
5	F20411	Wrench—Main landing gear oleo lock ring spanner		1
6	F20412	Wrench—Tail wheel oleo lock ring spanner		1
7	F20413	Wrench—Tail wheel oleo packing nut spanner		1
8	F20510	Wrench—Retracting gear housing cap spanner		1
9	F20601	Wrench—Main landing gear wheel hub nut box		1
10	F20701	Wrench—Outer wing joint box		1
11	F20802	Wrench—Tail wheel axle nut box		1
12	F20900	Scissors—Main oleo retaining link (4 pieces)		2
13	F21126	Wrench—Oil return line crowfoot		1
14	F21901	Wrench—9-16 in. crowfoot		1
15	F21902	Wrench—5-8 in. crowfoot		1
16	F21903	Wrench—11-16 in. crowfoot		1
17	F21904	Wrench—7-8 in. crowfoot		1
18	F21905	Wrench—1 in. crowfoot		1
19	F21906	Wrench—1 3-16 in. crowfoot		1
20	F21907	Wrench—1 1-2 in. crowfoot		1
21	F21908	Wrench—1 15-16 in. crowfoot		1
22	F21914	Wrench—15-16 in. crowfoot		1
23	F22101	Wrench—3-4 booter plug key		1
24	F22102	Wrench—7-8 booter plug key		1
25	F23701	Wrench—Headless setscrew hexagon 1-16		1
26	F23702	Wrench—Headless setscrew hexagon 3-32		1
27	F23703	Wrench—Headless setscrew hexagon 1-8		1
28	F23704	Wrench—Headless setscrew hexagon 5-32		1
29	F23705	Wrench—Headless setscrew hexagon 3-16		1
30	F23706	Wrench—Headless setscrew hexagon 7-32		1
31	F23707	Wrench—Headless setscrew hexagon 1-4		1
32	F23709	Wrench—Headless setscrew hexagon 5-16		1
33	F23711	Wrench—Headless setscrew hexagon 3-8		1
34	F23715	Wrench—Headless setscrew hexagon 1-2		1

PUBLISHED BY AVIALOGS.COM

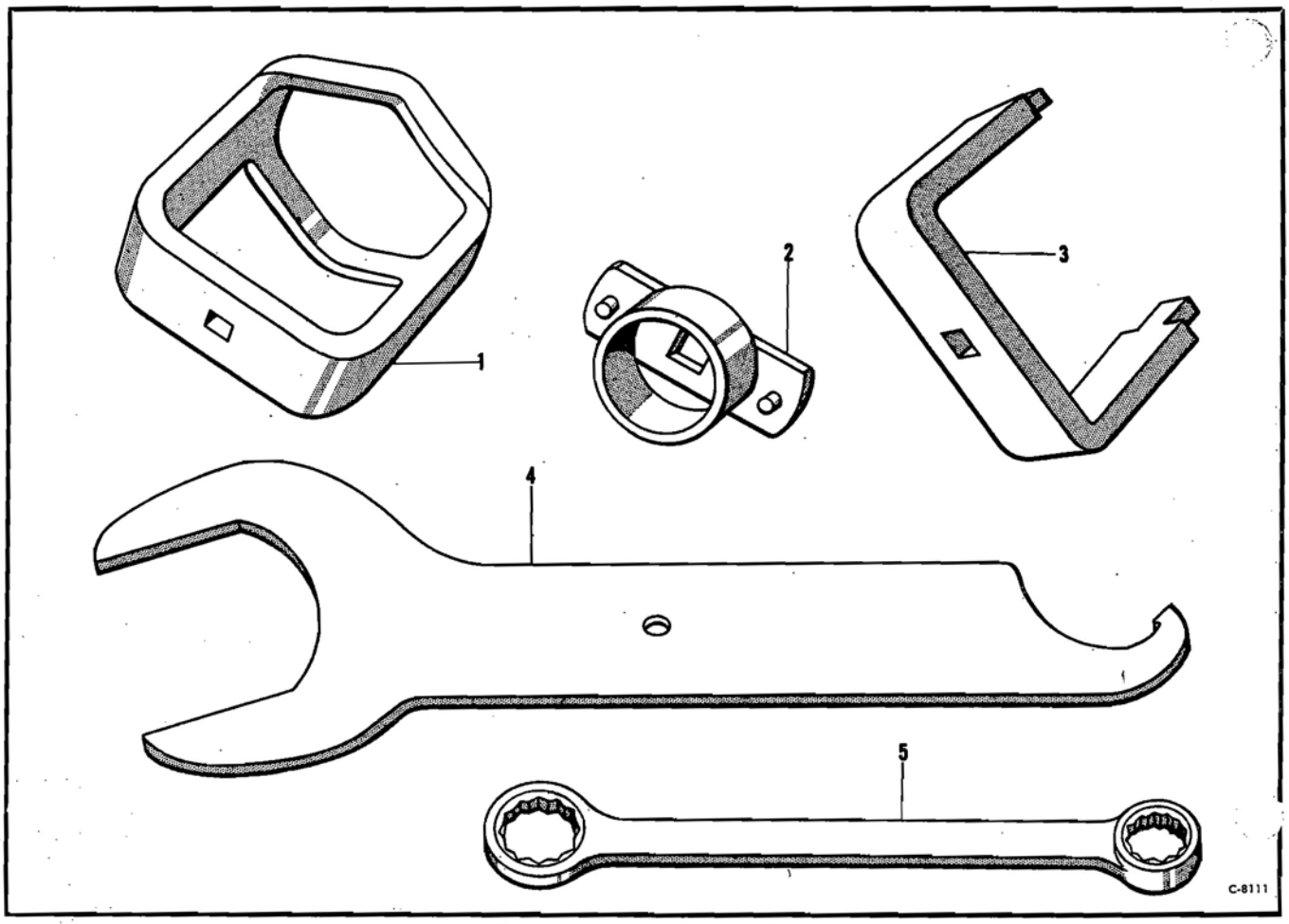

Figure 214—Service Tools

Service Tools

Figure & Index No.	*Part Number*	*1 2 3 4 5 6 7* *Nomenclature*	*Usage Code*	*Units Per Assy.*
214-1	F20801	Wrench—Glycol tank filler neck box		1
	F20803	Wrench—Oil tank filler neck box		1
	F20601	Wrench—Main landing gear wheel hub nut box		1
	F20802	Wrench—Tail wheel axle nut box		1
2	F21300	Wrench—Main landing gear retracting screw nut pilot spanner		1
3	F20200	Wrench—Fuel tank filler neck box		1
4	F23501	Wrench—Open end and spanner (1-4 open end 3-8 spanner)		1
	F23502	Wrench—Open end and spanner (3-8 open end 1-4 spanner)		1
	F23503	Wrench—Open end and spanner (1-2 open end 5-8 spanner)		1
	F23504	Wrench—Open end and spanner (5-8 open end 1-2 spanner)		1
	F23505	Wrench—Open end and spanner (3-4 open end 7-8 spanner)		1
	F23506	Wrench—Open end and spanner (7-8 open end 3-4 spanner)		1
	F23507	Wrench—Open end and spanner (1 open end 1 1-4 spanner)		1
	F23508	Wrench—Open end and spanner (1 1-4 open end 1 spanner)		1
	F23509	Wrench—Open end and spanner (1 1-2 open end 2 spanner)		1
	F23510	Wrench—Open end and spanner (2 open end 1 1-2 spanner)		1
5	F20701	Wrench—Outer wing joint box		1

PUBLISHED BY AVIALOGS.COM

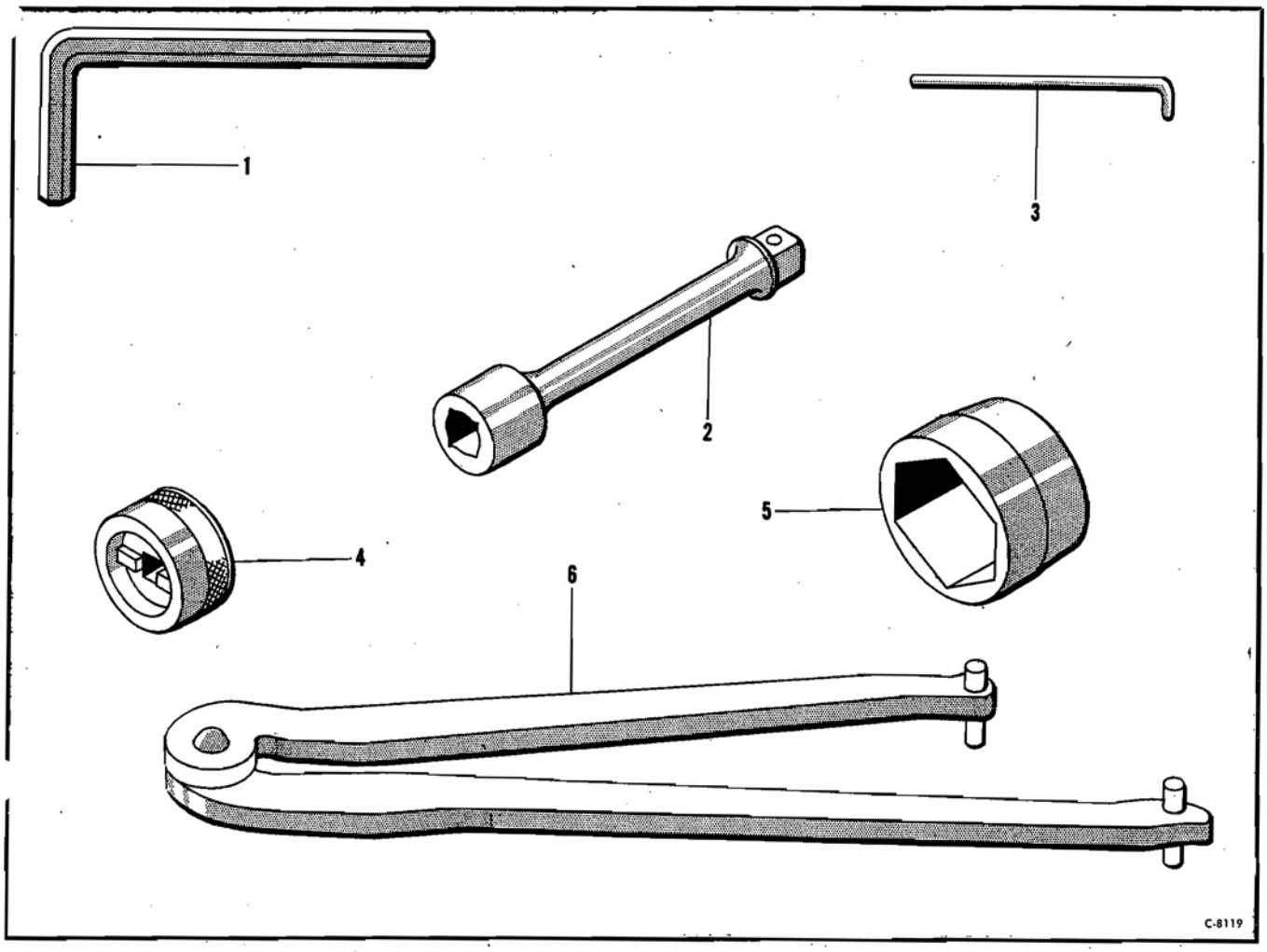

Figure 213—Service Tools

Service Tools

Figure & Index No.	*Part Number*	*1 2 3 4 5 6 7* *Nomenclature*	*Usage Code*	*Units Per Assy.*
213-1	F23701	Wrench—Headless setscrew hexagon 1-16		1
	F23702	Wrench—Headless setscrew hexagon 3-32		1
	F23703	Wrench—Headless setscrew hexagon 1-8		1
	F23704	Wrench—Headless setscrew hexagon 5-32		1
	F23705	Wrench—Headless setscrew hexagon 3-16		1
	F23706	Wrench—Headless setscrew hexagon 7-32		1
	F23707	Wrench—Headless setscrew hexagon 1-4		1
	F23708	Wrench—Headless setscrew hexagon 9-32		1
	F23709	Wrench—Headless setscrew hexagon 5-16		1
	F23710	Wrench—Headless setscrew hexagon 11-32		1
	F23711	Wrench—Headless setscrew hexagon 3-8		1
	F23712	Wrench—Headless setscrew hexagon 13-32		1
	F23713	Wrench—Headless setscrew hexagon 7-16		1
	F23714	Wrench—Headless setscrew hexagon 15-32		1
	F23715	Wrench—Headless setscrew hexagon 1-2		1
2	F20001	Extension Assembly—3-8 square drive		1
3	F20000	Bleeder—Hydraulic accumulator		1
4	F22101	Wrench—3-4 booter plug key		1
	F22102	Wrench—7-8 booter plug key		1
5	F20003	Wrench—1-2 socket		1
6	F61800	Wrench Assembly—Adjustable spanner		1

PUBLISHED BY AVIALOGS.COM

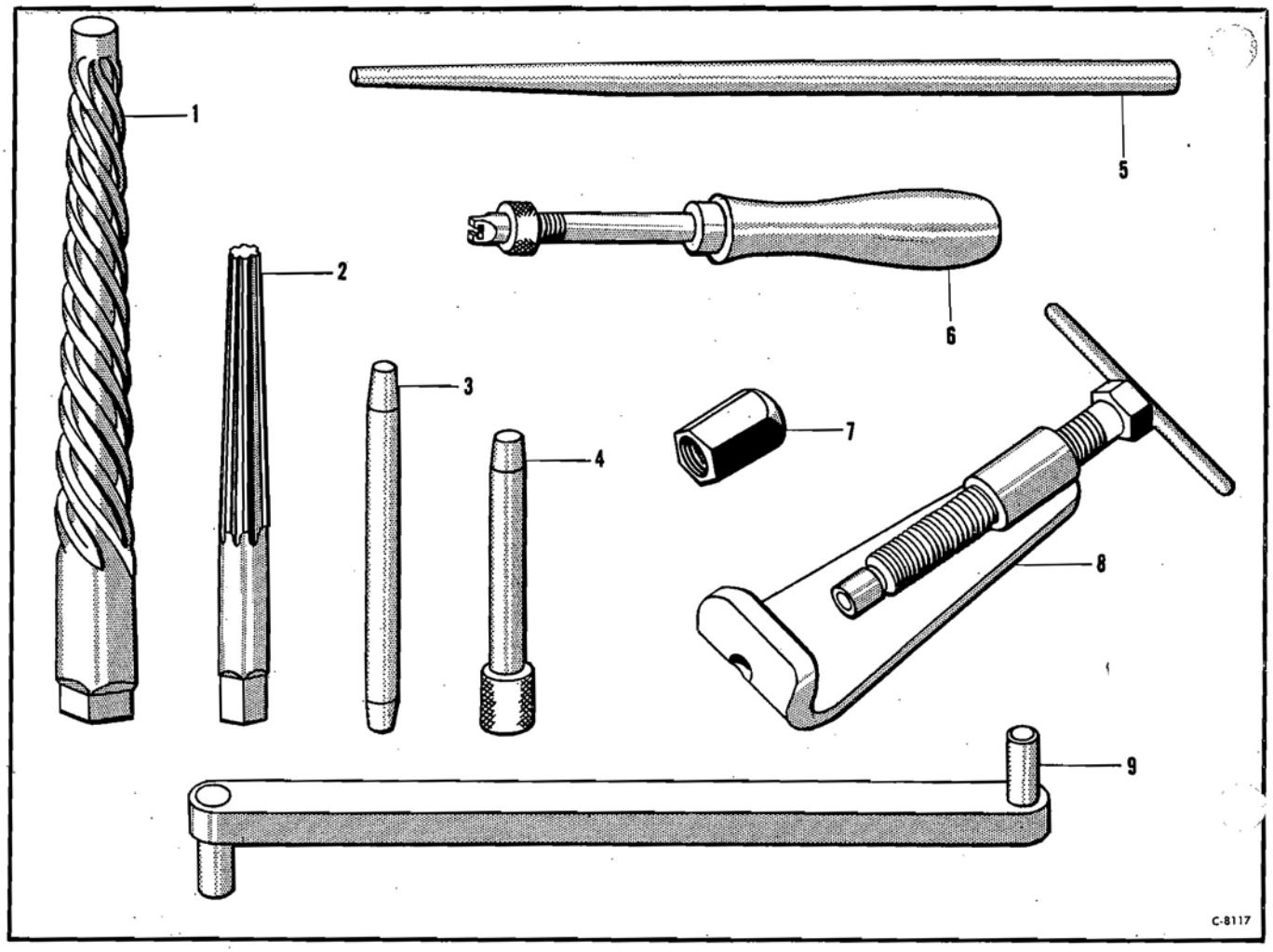

Figure 212—Service Tools

Service Tools

Figure & Index No.	*Part Number*	*1 2 3 4 5 6 7 Nomenclature*	*Usage Code*	*Units Per Assy.*
212-1	F23001	Reamer—1 1-64 pilot roughing		1
	F23002	Reamer—7-8 pilot roughing		1
	F23003	Reamer—23-32 pilot roughing		1
	F23004	Reamer—15-32 pilot roughing		1
	F23005	Reamer—27-64 pilot roughing		1
	F23006	Reamer—21-64 pilot roughing		1
	F23007	Reamer—1 1-8 pilot roughing		1
2	F23105	Reamer—Number 5 straight flute tapered		1
	F23106	Reamer—Number 6 straight flute tapered		1
	F23108	Reamer—Number 8 straight flute tapered		1
	F23109	Reamer—Number 9 straight flute tapered		1
	F23110	Reamer—Number 10 straight flute tapered		1
3	F21601	Pin—Station 19 wing alignment		1
	F21602	Pin—Inboard wing alignment		1
	F21603	Pin—Station 1 wing alignment		1
4	F21701	Pin—Horizontal stabilizer alignment		1
	F21702	Pin—Vertical stabilizer alignment		1
5	F21801	Punch—1 x 16 in. alignment		1
	F21802	Punch—1-2 x 12 in. alignment		1
6	F22700	Holder—De-icer boot screw		1
7	F21001	Knockout—Taper pin (5-16 24 thread)		
	F21002	Knockout—Taper pin (3-8 24 thread)		
	F21003	Knockout—Taper pin (7-16 20 thread)		
	F21004	Knockout—Taper pin (9-16 18 thread)		1
	F21005	Knockout—Taper pin (3-4 16 thread)		1
	F21006	Knockout—Taper pin (7-8 14 thread)		1
8	F22800	Press—Taper pin removal		1
9	F21200	Tool—Line up for outer to inner wing splice		1

PUBLISHED BY AVIALOGS.COM

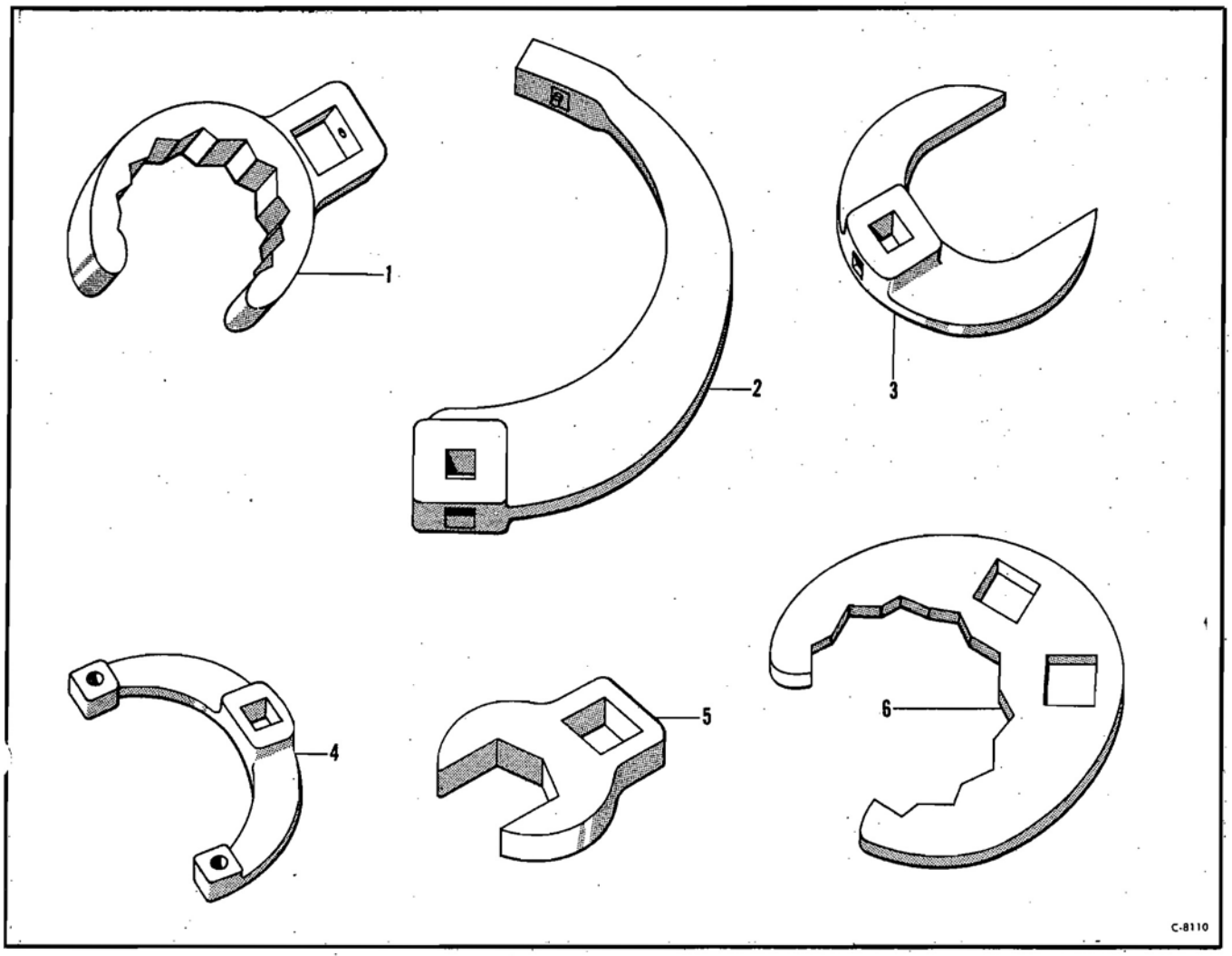

Figure 211—Service Tools

Service Tools

Figure & Index No.	*Part Number*	*1 2 3 4 5 6 7* *Nomenclature*	*Usage Code*	*Units Per Assy.*
211-1	F21901	Wrench—9-16 in. crowfoot		1
	F21902	Wrench—5-8 in. crowfoot		1
	F21903	Wrench—11-16 in. crowfoot		1
	F21904	Wrench—7-8 in. crowfoot		1
	F21914	Wrench—15-16 in. crowfoot		1
	F21905	Wrench—1 in. crowfoot		1
	F21906	Wrench—1 3-16 in. crowfoot		1
	F21907	Wrench—1 1-2 in. crowfoot		1
2	F20410	Wrench—Main landing gear oleo packing nut spanner		1
	F20411	Wrench—Main landing gear oleo lock ring spanner		1
	F20412	Wrench—Tail wheel oleo lock ring spanner		1
	F20413	Wrench—Tail wheel oleo packing nut spanner		1
3	F21126	Wrench—Oil return line crowfoot		1
4	F20510	Wrench—Retracting gear housing cap spanner		1
5	F21908	Wrench—1 15-16 in. crowfoot		1
6	F20301	Wrench—Starter and generator crowfoot		1

PUBLISHED BY AVIALOGS.COM

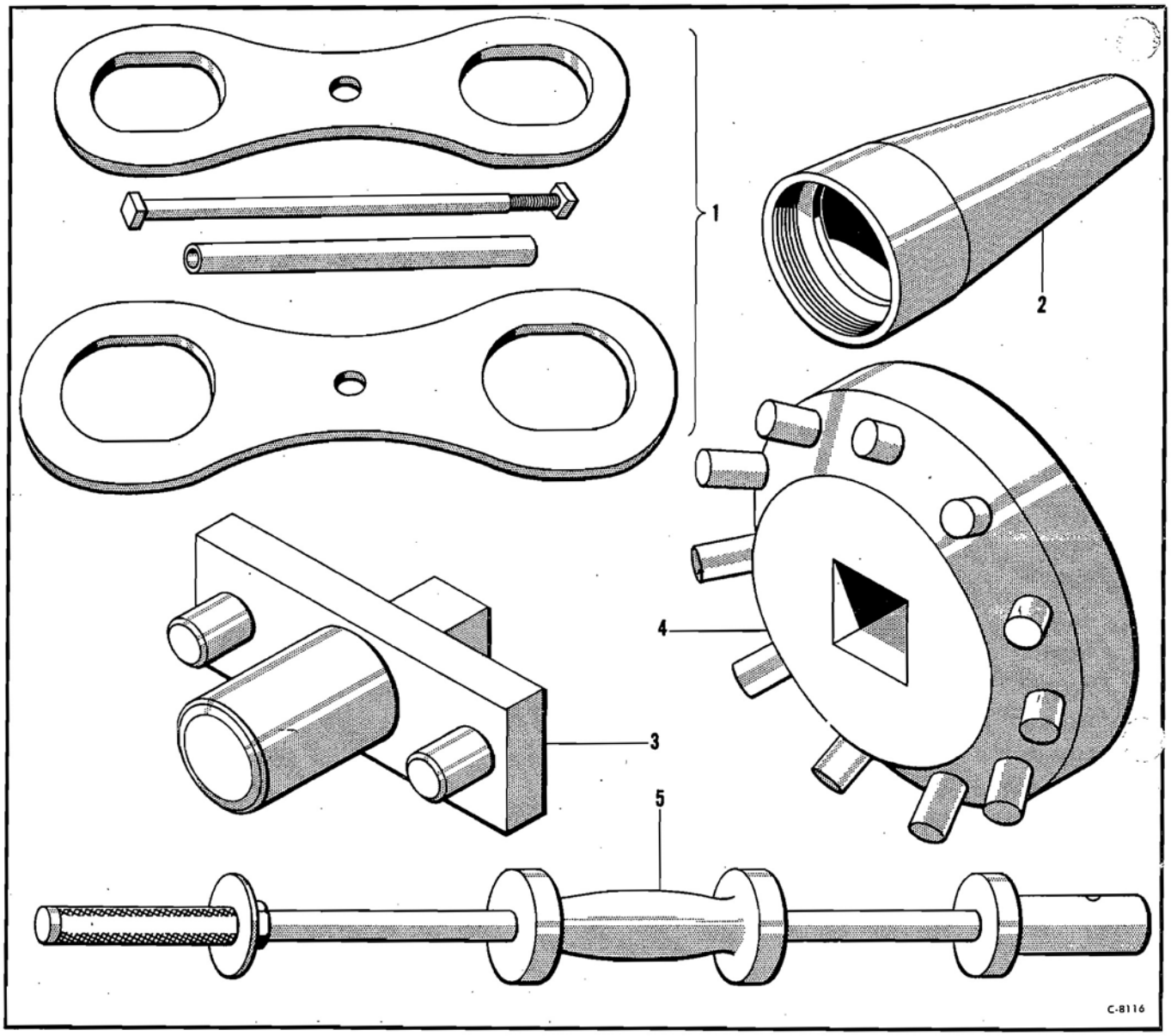

Figure 210—Service Tools

Service Tools

Figure & Index No.	*Part Number*	*1 2 3 4 5 6 7* *Nomenclature*	*Usage Code*	*Units Per Assy.*
210-1	F20900	Scissors—Main oleo retaining link (4 pieces)		1
2	F22200	Tool—Landing gear wheel installation		1
3	F21400	Wrench—Main landing gear adjusting nut		1
4	F21500	Wrench—Main landing gear screw gear		1
5	F22600	Inserter and Puller—Landing gear pin		1

PUBLISHED BY AVIALOGS.COM

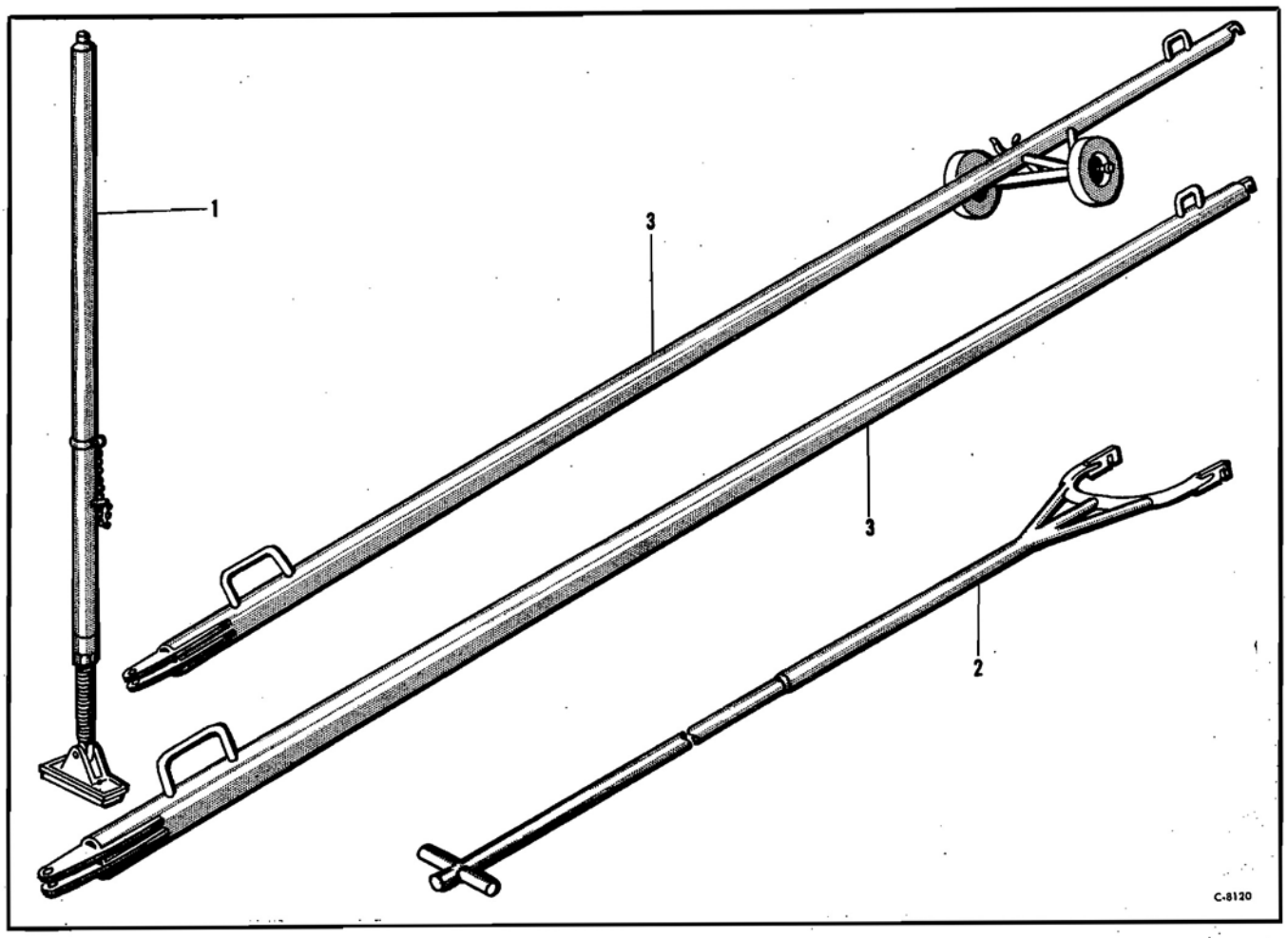

Figure 209—Ground Handling Equipment

Ground Handling Equipment

Figure & Index No.	*Part Number*	*1 2 3 4 5 6 7* *Nomenclature*	*Usage Code*	*Units Per Assy.*
		Ground Handling Equipment		
209-1	F10800	Support—Engine nacelle		1
2	F10100	Bar—Tail wheel steering		1
3	F10000	Bar Assemblies—Front wheel towing (2 pieces)		1

RESTRICTED
PUBLISHED BY AVIALOGS.COM

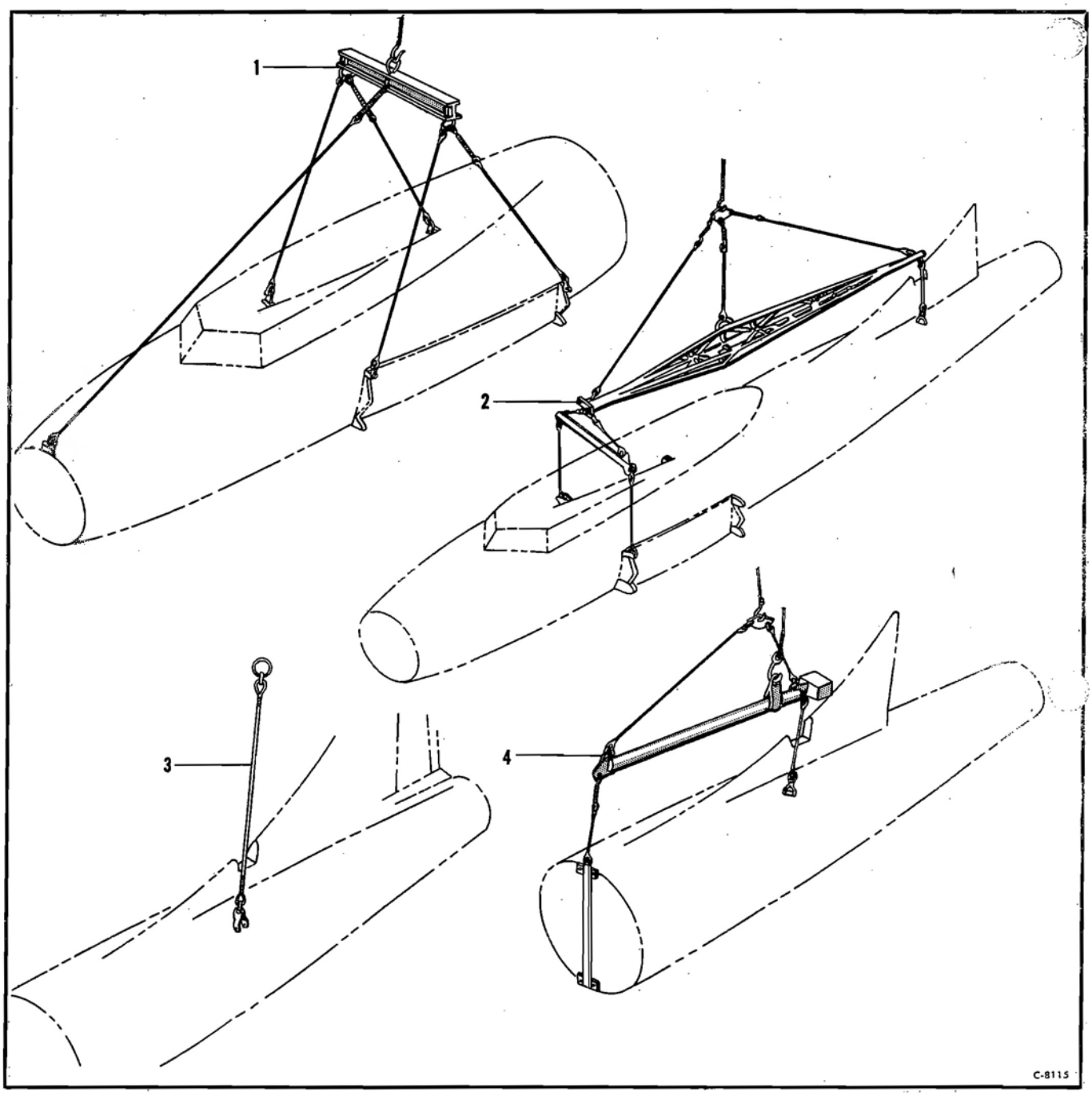

Figure 208—Fuselage Hoisting Slings

Fuselage Hoisting Slings

Figure & Index No.	*Part Number*	*1 2 3 4 5 6 7* *Nomenclature*	*Usage Code*	*Units Per Assy.*
		Fuselage Hoisting Slings		
208-1	F10900	Sling—Fuselage station 1 to 6 hoisting		1
2	F10500	Sling—Fuselage hoisting		1
3	F10300	Sling—Tail hoisting		1
4	F11000	Sling—Fuselage station 6 to 11 hoisting		1

PUBLISHED BY AVIALOGS.COM

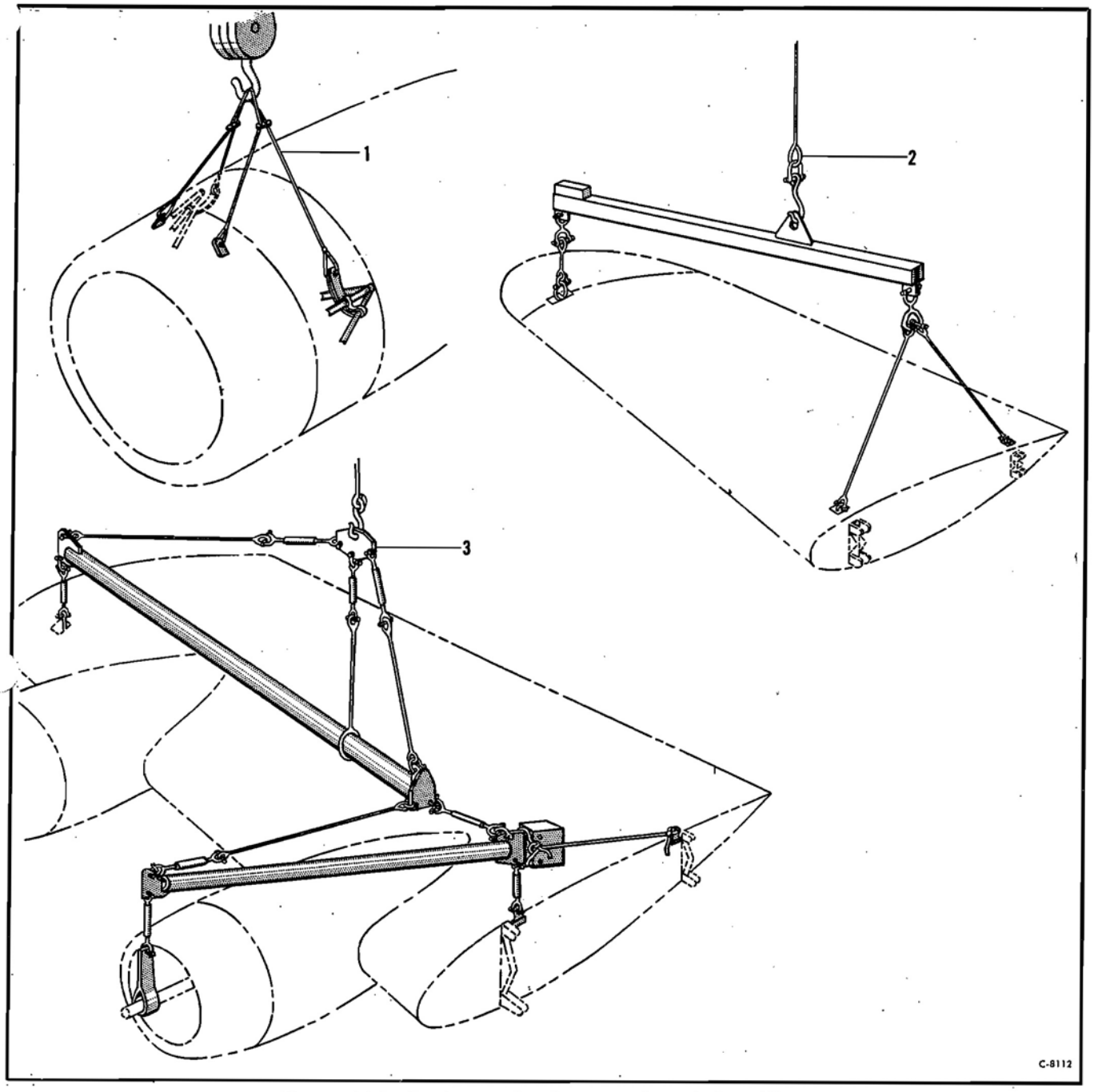

Figure 207—Engine and Wing Panels Hoisting Slings

Engine and Wing Panels Hoisting Slings

Figure & Index No.	*Part Number*	*1 2 3 4 5 6 7* *Nomenclature*	*Usage Code*	*Units Per Assy.*
		Engine and Wing Panels Hoisting Slings		
207-1	F10700	Sling—Quick change unit engine hoisting		1
2	F10200	Sling—Outboard wing panel hoisting		1
3	F10400	Sling—Inboard wing panel hoisting		1

PUBLISHED BY AVIALOGS.COM



Section five

SERVICE TOOLS

PUBLISHED BY AVIALOGS.COM

All standard parts listed in the assembly breakdown list of this Parts Catalog are listed in numerical order in the Numerical Parts List. Therefore, a separate standards list has not been included.

PUBLISHED BY AVIALOGS.COM



Section four

STANDARD PARTS LIST

PUBLISHED BY AVIALOGS.COM

U. S. Army	U. S. Navy	British	Part Number	Figure & Index No.	Total Qty.
			9-7556	140-36	1
			9-7557	146	1
			9-7557-2	146	1
			9-7577	17	NP
			9-7577-1	17	NP
			9-7945	141-34	1
			9-7955	71-2	NP
				127	
			9-7956	71-3	NP
			9-7996	21-67	NP
				22-59	
				69	
			9-7996-1	69-53	1
			9-8083	79-8	1
			9-8083-1	79	1
			9-8940	108	NP
			9-8951	147-92	2
			9-8965	136	NP
			9-8965-1	136	1
			9-8973	147-43	1
			9-9153	111	NP
			9-9153-1	111	NP
			9-9156	143-47	1
			9-9160	127	NP
			9-9165	110	NP
			9-9177	133	NP
			9-9177-1	133-38	1
			9-9177-2	133	1
			9-9184	133	NP
			9-9184-1	133-47	1
			9-9184-2	133	1
			9-9186	130	NP
			9-9191	119-21	2
			9-9196	131	NP
			9-9199	119	NP
			9-9199-1	119	NP
			9-9199-2	119	1
			9-9199-3	119	1
			9-9208	22	NP
			9-9208-1	22	NP
			9-9208-7	22-58	2
			9-9208-8	22	2
			9-9209	132	NP
			9-9232	131	NP
			9-9354	129-19	1
			9-9872	133	NP
			9-9872-1	133-48	1
			9-9897	146	NP
			9-9897-1	146	NP
			9-9897-2	146	1
			9-9897-3	146	1
			905-6	19-38	16
				20-34	
				97-22	
				169-9	
				169-35	
			908-16	23-23	2
			91-9284	41	1
			915-4C	177	4
				184-13	
			94-1128-419	6	NP
			94-1128-420	6	NP
			94-1128-421	6	1
			94-1128-422	6	1
			940-11	70-32	1
			940-416	77	38
				77-27	
			940167	106-43	2
				113-28	
				198-14	
			95-3425	69	1
				70	
			95-3684-806	74	NP
			95-3684-807	74	NP
			95-4808-600	11-18	1
			95-4808-601	11	1
			95-4808-824	11	NP
			95-4808-825	11	NP
			95-6525	17	1
				178-46	
			95-6525-805	17-34	1
			95-6525-811	17	1
				178	
			95-6525-812	17	1
			95-6525-814	17	1
			95-6525-819	17	1
				178	
			95-6525-820	17	1
				178	
			9565H2A	111-58	2
			962	127-32	1
			97-5103-12S35	148	2
			985	82-55	2
			987-4	113-16	2
			9900	82-47	2

PUBLISHED BY AVIALOGS.COM

U. S. Army	U. S. Navy	British	Part Number	Figure & Index No.	Total Qty.
			9-6473	119	NP
			9-6473-2	119-18	2
			9-6481-2	79	1
				150-19	
			9-6482-2	79	1
				155-20	
			9-6483	129	NP
			9-6602	45	NP
			9-6602-1	45	2
			9-6602-4	45	2
			9-6603	45	NP
			9-6603-1	45-32	2
			9-6603-4	45-34	2
			9-6606	127	NP
			9-6606-2	127-8	1
			9-6607	71-11	1
			9-6607-2	71	1
			9-6608	71	NP
			9-6608-1	71	NP
			9-6608-2	71	1
				88-6	
				89-5	
			9-6608-3	71	1
				88-7	
				89-6	
			9-6610	68-10	1
			9-6610-1	68	1
			9-6611	68	NP
			9-6611-1	68	NP
			9-6611-2	68-8	1
				88-4	
				89-11	
			9-6611-3	68-9	1
				88-5	
				89-12	
			9-6612	98	1
			9-6617	98-10	1
			9-6617-5	98	1
			9-6617-8	98	1
			9-6617-9	98	1
			9-6623	43	NP
			9-6623-1	43	NP
			9-6715	141-23	1
			9-6719	138	NP
			9-6719-1	138	1
			6-6730-1	17-36	2
			9-6742	44-25	1
			9-6742-3	44	1
			9-6749	44	1
			9-6749-4	44	1
			9-6749-5	44	1
			9-6775	98	NP
			9-6776-0	98-7	1
			9-6776-7	98	1
			9-6776-8	98	1
			9-6783	108-17	1
			9-6784	108	NP
			9-6784-1	108	1
			9-6784-2	108-19	1
			9-6784-7	108	1
			9-6790	130	NP
			9-6861	165	2
				166	
			9-6882	114	NP
			9-6882-1	114	1
			9-6882-3	114-16	1
			9-6882-4	114	1
			9-6883	28	1
			9-6883-1	28	1
			9-6883-2	28	1
			9-6883-3	28	1
			9-7045	98	NP
			9-7049	119	NP
			9-7050	53-32	1
			9-7051	53-12	1
			9-7066	66-43	4
				66-44	
			9-7079	53-40	1
			9-7080-7	53-61	2
			9-7084	140-43	1
			9-7084-1	140-40	1
			9-7092	140-21	1
			9-7093	140-14	1
			9-7096	140-57	1
			9-7207	170-1	2
			9-7207-1	170-6	2
			9-7207-2	170-20	2
			9-7221	53	NP
			9-7221-1	53-30	1
			9-7221-10	53-31	1
			9-7230	30	1
			9-7231	30	1
			9-7232	30	1
			9-7249-4	53-54	1
			9-7252-4	53-56	1
			9-7255	57-58	1
			9-7256	57	NP
			9-7256-1	57-57	1
			9-7257	9	NP
			9-7257-1	9	1
				57-66	
			9-7264	141	NP
			9-7264-1	141-8	1
			9-7265	166	NP
			9-7265-1	166	NP
			9-7265-3	166-41	2
			9-7265-5	166-43	4
			9-7265-6	166	2
			9-7266	69-2	1
			9-7268-5	53-49	1
			9-7280	69-4	1
			9-7281	69	NP
			9-7281-1	57-60	1
				69-3	
			9-7284-2	71-9	1
			9-7287	71-10	1
			9-7288	9-7	1
			9-7289	9-16	1
			9-7294	53-44	1
			9-7298	9	NP
			9-7298-1	9	1
				57-65	
			9-7304	113	NP
			9-7304-1	113	1
			9-7306	71	NP
			9-7306-1	57-61	1
				71	
			9-7312	69	NP
			9-7312-1	57-59	1
				69-1	
			9-7321	81-28	1
			9-7342	116-2	1
			9-7342-2	116	1
			9-7342-4	116	1
			9-7342-6	116	1
			9-7358	141-45	1
			9-7358-6	141	1
			9-7367-10	132	2
			9-7367-6	132-37	2
			9-7374	141-10	1
			9-7375-14	141-16	1
			9-7375-9	141-15	1
			9-7380	140-42	1
			9-7381	140	NP
			9-7508	128	NP
			9-7512	84	NP
			9-7512-1	84-23	2
			9-7512-5	84	2
			9-7512-8	84	NP
			9-7525	146-38	2
			9-7527	108	NP
			9-7545	65-17	1
				146-36	
			9-7545-1	65-29	1
				146-37	
			9-7553	140-32	

PUBLISHED BY AVIALOGS.COM

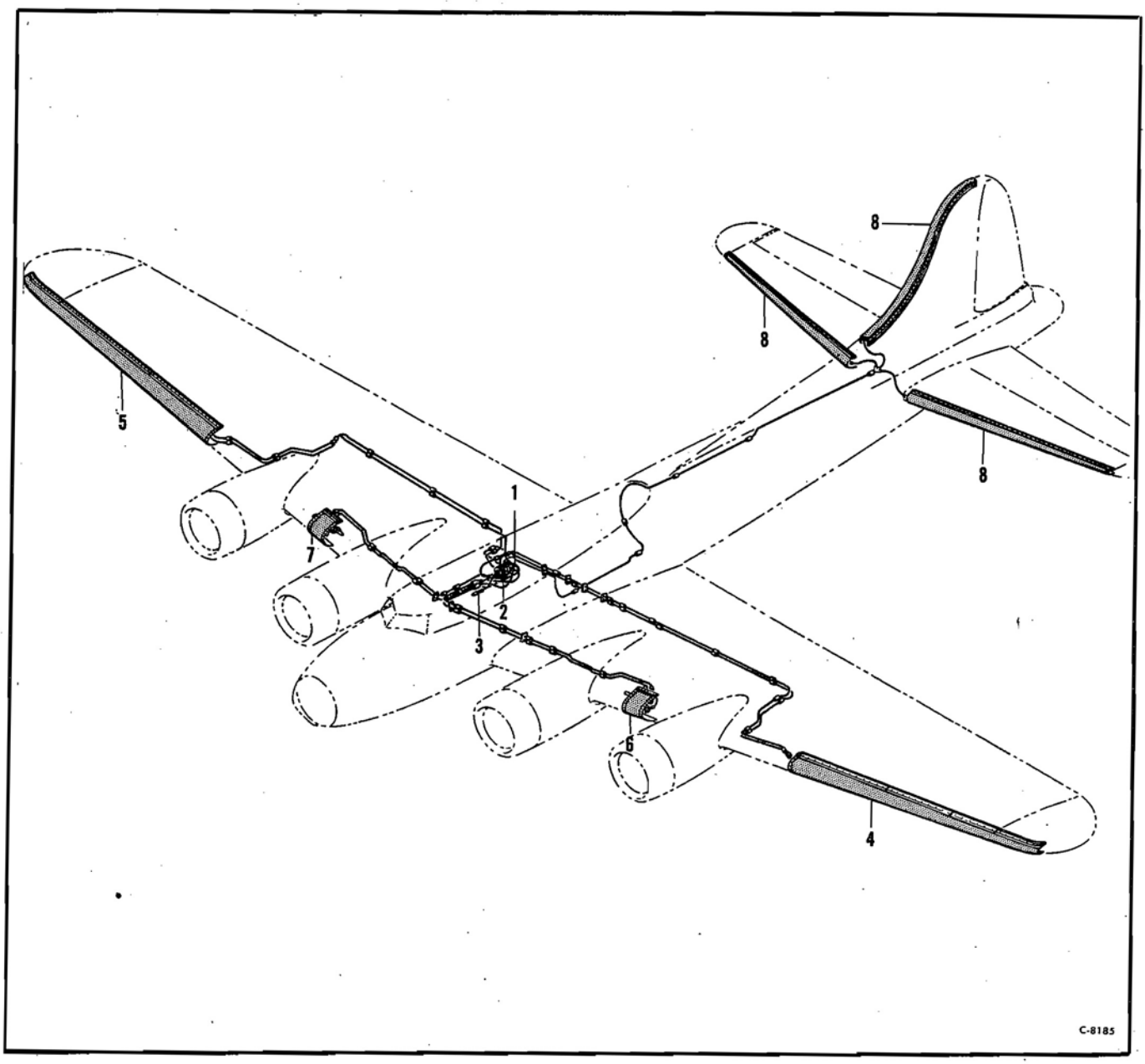

Figure 201—De-icer System

De-icer System

Figure & Index No.	*Part Number*	*1 2 3 4 5 6 7* *Nomenclature*	*Usage Code*	*Units Per Assy.*
		De-icer System		
		Fuselage De-icer System (see fig. 139)		
201-1	574-2	Valve Assembly—De-icer dist (Eclipse) (see T.O. 03-35B-4) (see fig. 139)	All	Ref
2	DL445	Filter (P. R. Mallory Co.) (see fig. 139)	All	Ref
3	557-5	Valve—Check (Eclipse) (see fig. 139)	All	Ref
		Wing De-icer System (see fig. 50)		
4	FC163-4-1	Boot—LH wing outboard (Goodrich) (see fig. 50)	All	Ref
5	FC163-4-2	Boot—RH wing outboard (Goodrich) (see fig. 50)	All	Ref
6	FC163-10-1	Boot—LH wing inboard (Goodrich) (see fig. 50)	All	Ref
7	FC163-10-2	Boot—RH wing inboard (Goodrich) (see fig. 50)	All	Ref
		2-Tail De-icer (see fig. 61)	All	
8	FC163-8-1	Boot—Stabilizer (Goodrich) (see fig. 61)	All	Ref

PUBLISHED BY AVIALOGS.COM

FUNCTIONAL SYSTEMS

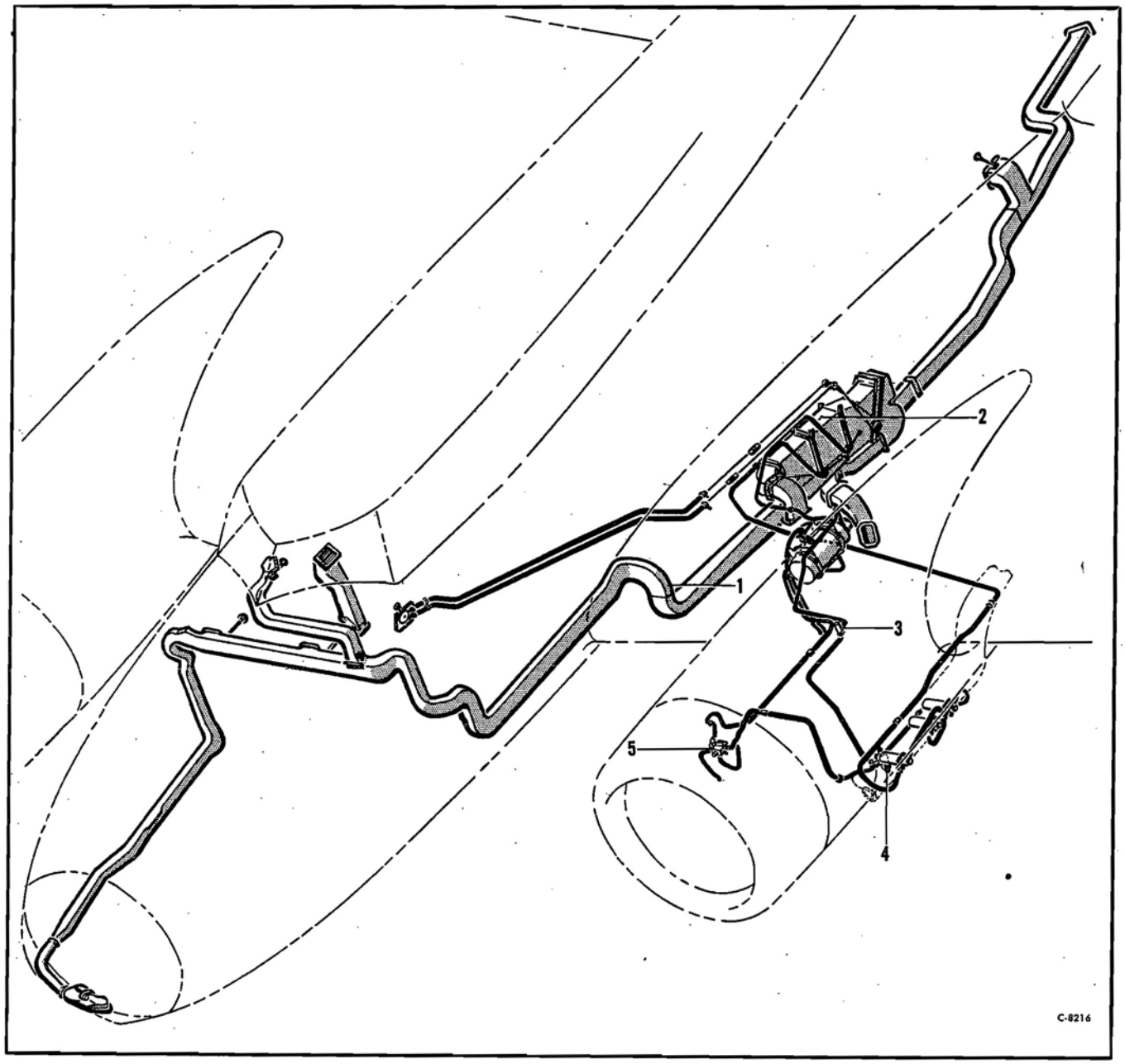

Figure 202—Heating and De-icing System

Heating and De-icing System

Figure & Index No.	*Part Number*	*1 2 3 4 5 6 7* *Nomenclature*	*Usage Code*	*Units Per Assy.*
		Heating and De-icing System		
202-1		Forward Fuselage Heating and De-icing System (see fig. 140)		
2		Heating and De-icing System—Fuselage aft (see fig. 141)		
		Heating and De-icing System—Wing (see fig. 53)		
3	7658E	Exchanger—Heat (see fig. 53)	XM	Ref
		Cabin Heat Control (see fig. 57)		
4	15-13013	Installation—Cabin heat stand (see fig. 144)	XM	NP
5	15-12965	Installation—Cabin heat control bracket (see fig. 56)	XM	NP

PUBLISHED BY AVIALOGS.COM

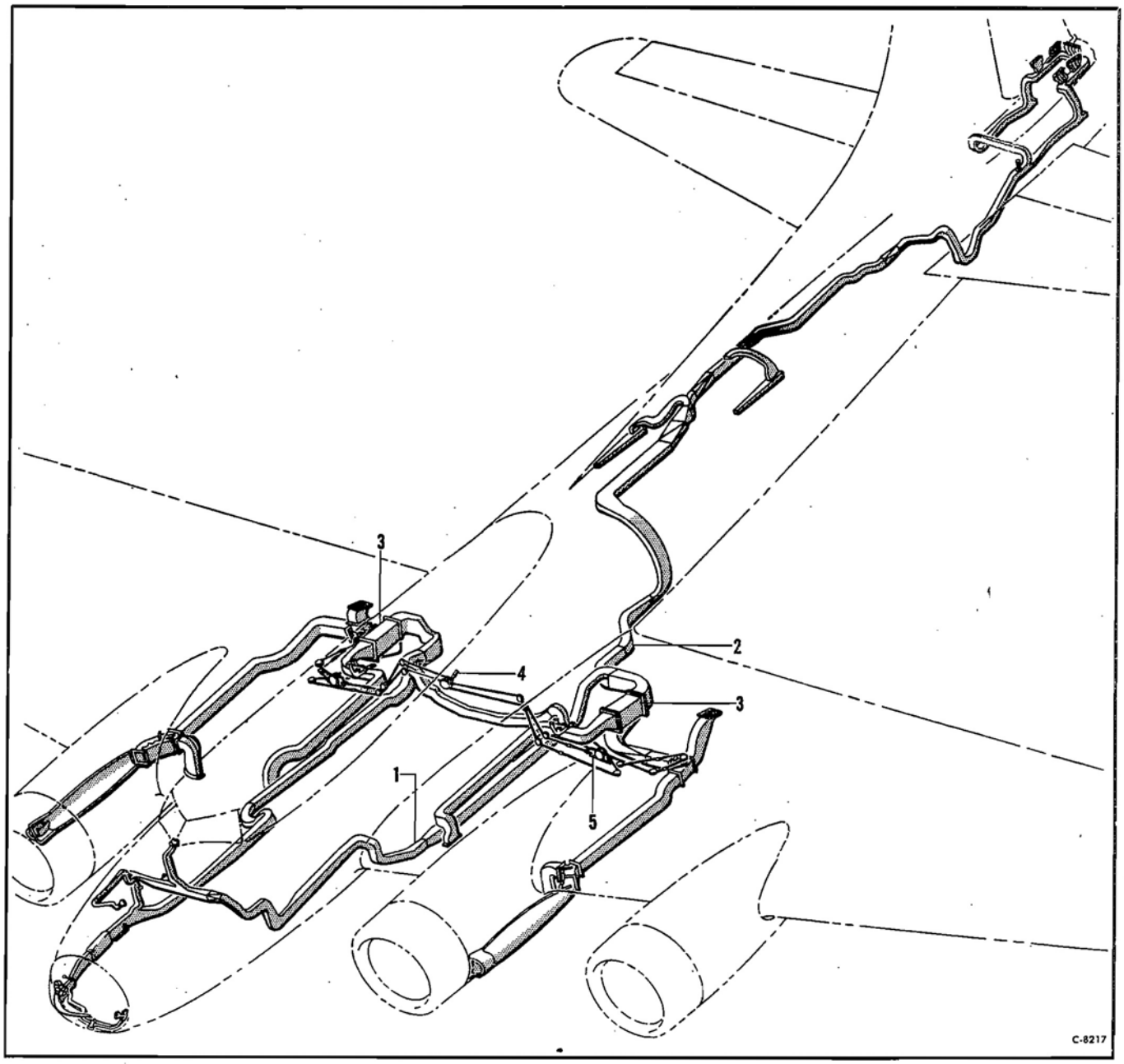

Figure 203—Heating and Ventilating System

Heating and Ventilating System

Figure & Index No.	*Part Number*	*1 2 3 4 5 6 7* *Nomenclature*	*Usage Code*	*Units Per Assy.*
		Heating and Ventilating System		
203-1		Heating and Ventilating System—Fuselage forward (see fig. 142)		
		Heating and Ventilating System—Fuselage aft (see fig. 143)		
2	1928E	Radiator Assembly (McQuay) (see fig. 143)	QB	Ref
		Glycol System (see fig. 54)		
3	10-2142-15	Valve Assembly—Pressure relief (Parker) (see fig. 55)	QB	Ref
4	27250	Purolator Assembly (Type G159J18) (Purolator) (see fig. 55)	QB	Ref
5	RD4550	Pump Assembly—Glycol (Romec) (see AN03-35A-6) (see fig. 177)	QB	Ref

PUBLISHED BY AVIALOGS.COM

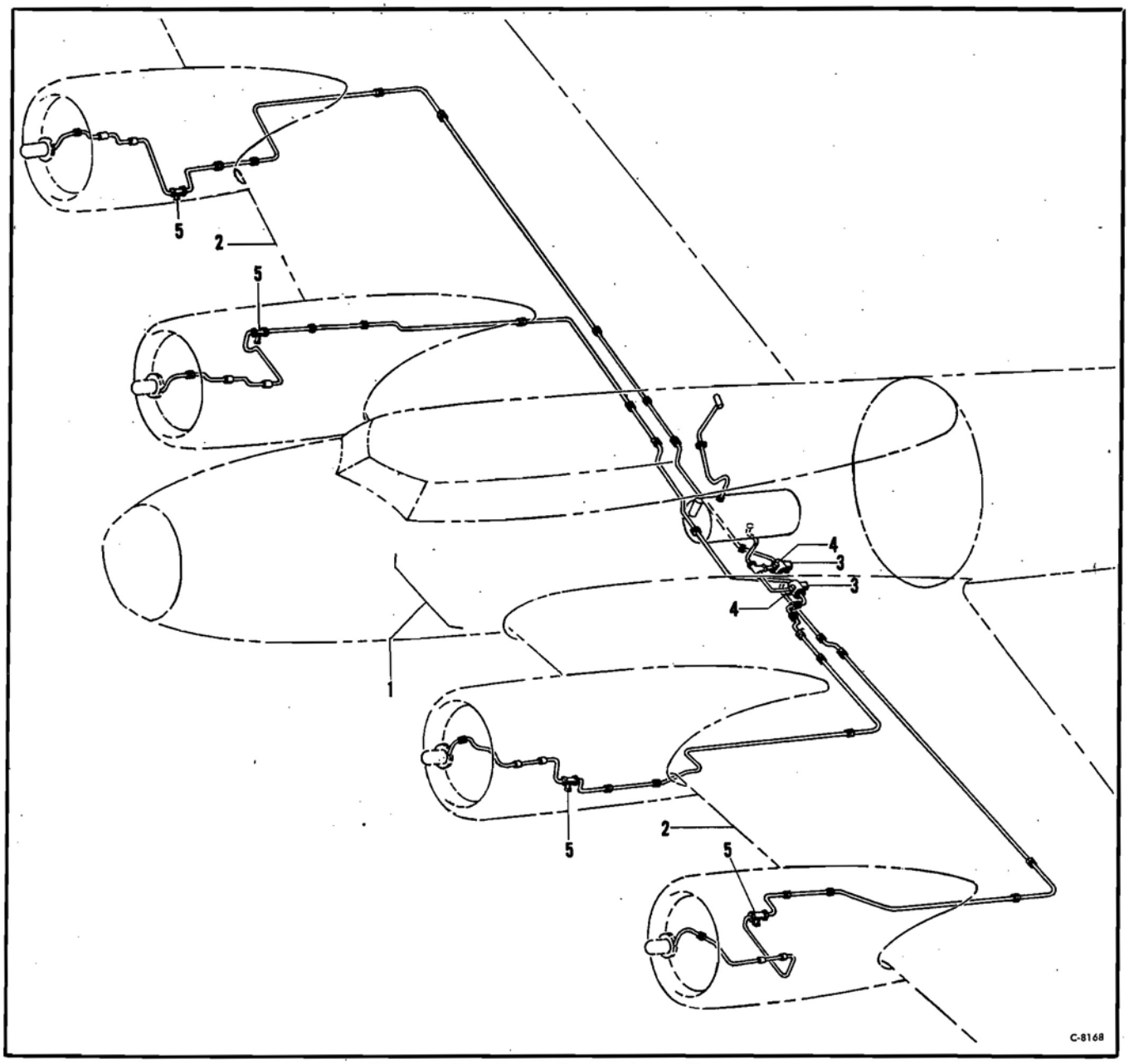

Figure 204—Propeller Anti-icer System

Propeller Anti-icer System

Figure & Index No.	*Part Number*	*1 2 3 4 5 6 7* *Nomenclature*	*Usage Code*	*Units Per Assy.*
		Propeller Anti-icer System		
	65-5660	Installation—Propeller anti-icer	All	NP
204-1		Propeller Anti-icer—Fuselage (see fig. 138)		
2		Propeller Anti-icer—Wing (see fig. 49)		
3	744-6	Pump Assembly—Propeller anti-icer (Eclipse) (see T.O. 03-1-5) (see fig. 138)	CB	Ref
	AN6100-1	Pump Assembly—Fluid metering (propeller anti-icer) (see fig. 138)	IL	Ref
4	712-1A	Filter Assembly—Propeller anti-icer (Eclipse) (see fig. 138)	CB	Ref
	AN6101-1	Filter Assembly—Fluid metering pump (propeller anti-icer) (see fig. 138)	IL	Ref
5	6001DD1-4D	Valve Assembly—Relief (Parker) (see fig. 49)	All	Ref

PUBLISHED BY AVIALOGS.COM

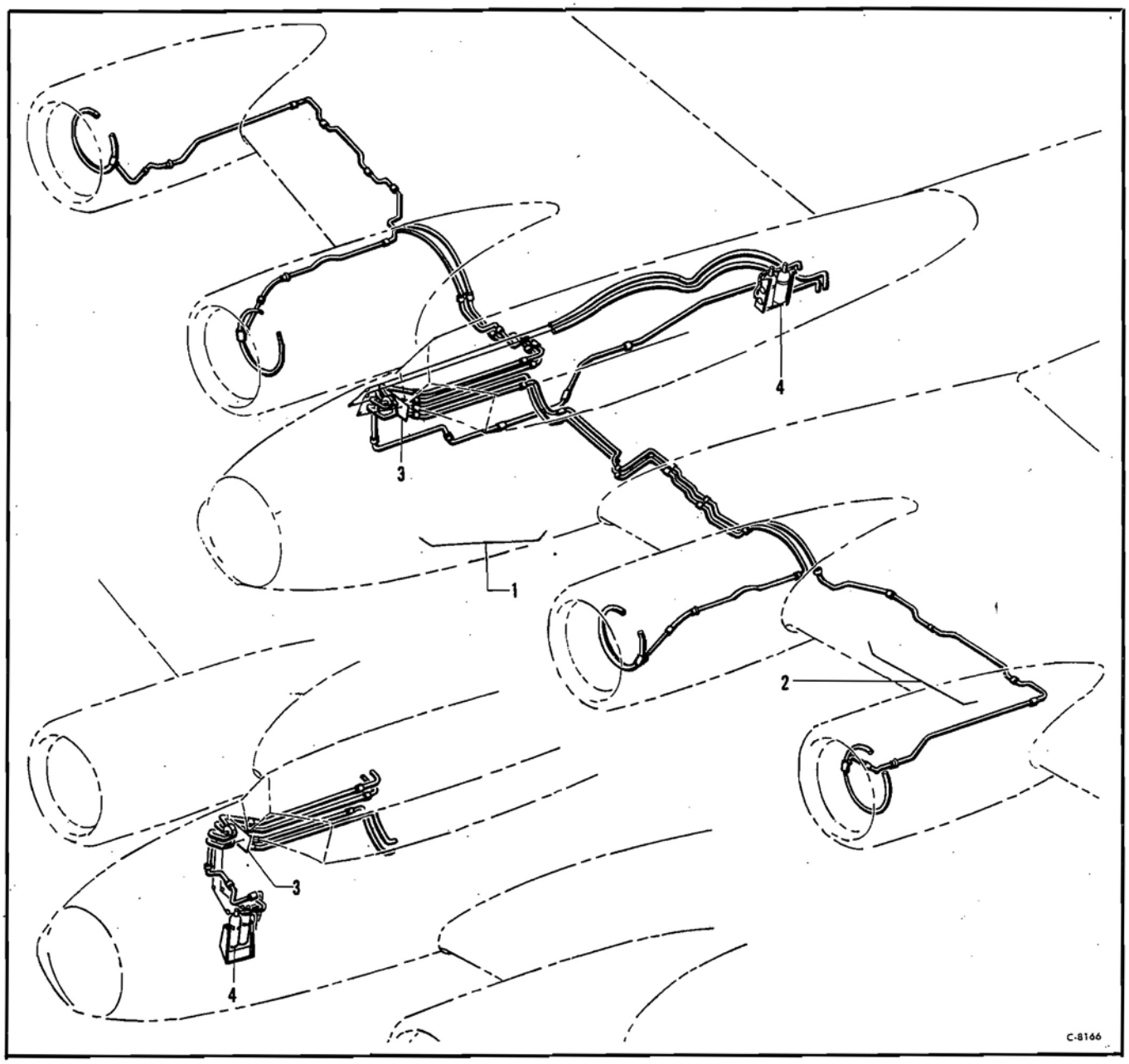

Figure 205—Engine Fire Extinguisher System

Engine Fire Extinguisher System

Figure & Index No.	*Part Number*	*1 2 3 4 5 6 7* *Nomenclature*	*Usage Code*	*Units Per Assy.*
		Engine Fire Extinguisher System		
	65-5679	Installation—Engine fire extinguisher	LI	NP
205-1		Engine Fire Extinguisher—Fuselage (see fig. 135)		
2		Engine Fire Extinguisher—Wing (see fig. 51)		
3	2CD5016	Panel Assembly—Control (American LaFrance-Foamite Corp.) GFE (see fig. 135)	LI	Ref
4	60870	Cylinder Assembly (Walter Kidde Co.) GFE (see fig. 135)	LI	Ref

PUBLISHED BY AVIALOGS.COM

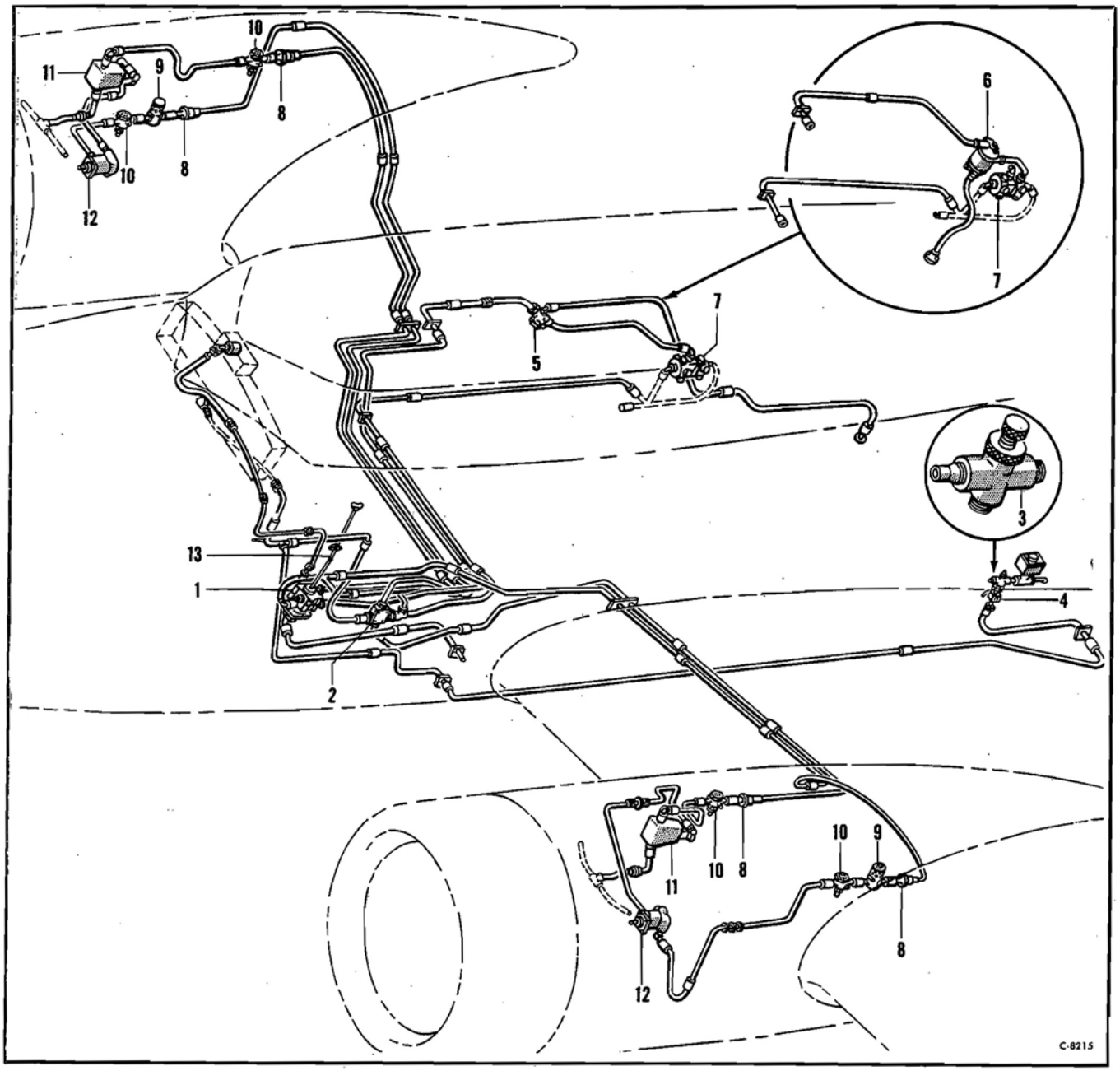

Figure 206—Vacuum System

Vacuum System

Figure & Index No.	Part Number	1 2 3 4 5 6 7 Nomenclature	Usage Code	Units Per Assy.
		Vacuum System		
206-1	577-2	Valve Assembly—De-icer (Eclipse) (see T.O. 03-35B-4) (see fig. 136)	All	Ref
2	B2-1741-1	Valve—Selector (Parker) (see fig. 137)	All	Ref
3	38A6133	Valve Assembly—Vacuum (see fig. 136)	All	Ref
4	AN5771-5A	Gage—Single pressure GFE (see fig. 136)	All	Ref
5	46-6684-405	Separator Assembly—Oil (see fig. 136)	BC	Ref
6	E120386	Separator Assembly—Oil (Eclipse) (see T.O. 03-1-5) (see fig. 136)	NO	Ref
7	574-2	Valve Assembly—De-icer distributor (Eclipse) (see T.O. 03-35B-4) (see fig. 139)	All	Ref
8	557-5	Valve—Check (Eclipse) (see T.O. 03-35B-3) (see fig. 52)	All	Ref
9	217HA	Valve Assembly—Safety (Pesco) (see fig. 137)	All	Ref
10	NO NUMBER	Valve—Relief (Spec 95-28368) (Type B-8) GFE (see fig. 52)	All	Ref
11	NO NUMBER	Separator—Oil (Spec 95-28368) (Type B-8) GFE (see fig. 52)	All	Ref
12	NO NUMBER	Pump—Vacuum (Spec 95-28368) (Type B-8) GFE (see fig. 177)	All	Ref
13	15-7515-37	Shaft Assembly (see fig. 136)	All	Ref

PUBLISHED BY AVIALOGS.COM

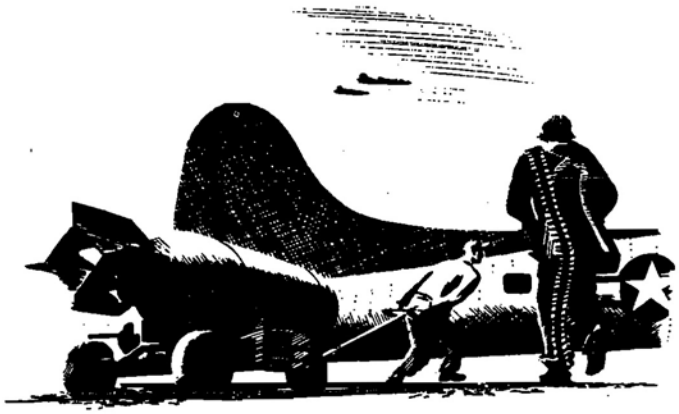

Section three

NUMERICAL PARTS LIST

PUBLISHED BY AVIALOGS.COM

U. S. Army	U. S. Navy	British	Part Number	Figure & Index No.	Total Qty.
			Adapter	146-2	7
				147-76	
				150-8	
				151-2	
			Ammeter	112-17	4
			Amplifier	98-11	1
			Antenna	128-10	1
			Bag	98-1	1
			Ball	124-4	2
				124-11	
			Bearing	124-23	2
			Bomb Release	116	2
			Bombsight	98-2	1
			Bottle	134-11	2
			Box	98-14	1
				100-8	
			Clock	108-24	1
			Compass	108-23	1
			Cylinder	134-12	18
			Dome	65-42	1
			Gun Heater	146	9
				146-17	
				147	
				149	
				149-13	
				150	
				150-15	
				151	
				151-15	
			Gyro	98-12	9
				109-36	
				133-17	
				133-34	
				133-49	
				133-54	
			Indicator	98-15	17
				108-7	
				108-50	
				109	
				109-10	
				109-19	
				109-21	
				109-26	
				109-28	
				116	
				116-30	
				133-12	
				133-35	
				133-45	
				133-55	
			Intervalometer	110-38	1
			Inverter	98-9	4
				111-25	
				111-70	
			Lamp	3	17
				3-4	
				110	
				110-8	
				110-9	
				110-39	
				114-8	
			Mast	127-44	5
				128	
				128-1	
				128-4	
				128-6	
			Pad	98	1
			Panel	98-4	1
			Power Plant	115-1	1
			Propeller	177-2	4
			Recorder	108-4	1
			Regulator	111-32	5
				115-2	
			Relay	44	18
				44-26	
				45	
				45-23	
				46	
				46-10	
				110-27	
				111-59	
			Rheostat	110-24	19
				110-33	
				111-83	
				114-14	
				114-35	
				115-30	
				116-11	
			Separator	52-11	2
				206-11	4
			Signal	134-4	4
			Solenoid	45	20
				45-22	
				46	
				46-4	
				46-5	
				113	
			Stabilizer	98-3	1
			Switch	46-9	11
				111-33	
				111-41	
				111-54	
				113-1	
				114-33	
				115	
				115-8	
			Thermometer	108-1	1
			Tire	166-61	3
				172-50	
			Transformer	111-30	4
			Transmitter	23	12
				28-14	
				28-18	
				198-5	
			Tube	108-18	4
				166-62	
				172-51	
			Vacuum Pump	52-25	2
				177-8	
				206-12	
			Valve	52-9	9
				134-5	
				206-10	
			Voltmeter	109-30	2
				112-19	
			AC168-3	91	1
			AC168-4	91	1
			ALG100005-20	166-54	2
			ALG100005-21	166	2
			ALG100006-10	165-1	2
				166-63	
			ALG206	165-2	2
			ALG206A	165	2
			ALG207	165-3	2
			ALG239	165-8	2
			ALG252	165-7	2
			ALG252A	165	2
			ALG262-10	165-4	2
			ALG262-20	165-5	2
			ALG437A	165-10	2
			AM26A1C	130	1
			AN10-12	166-51	24
			AN10-13	166-52	36
			AN10-46	15-19	4
			AN10-47	13-42	10
			AN10-81	13-32	2
			AN150-21S	25-18	12
			AN150-32S	25-29	4
			AN150-465	28-6	12
			AN155-16L	57-12	4
			AN155-16S	57-11	8
			AN155-6L	143-34	2
			AN200KR4	160	2
			AN200KR6	160	6
			AN200K4	12	45

PUBLISHED BY AVIALOGS.COM

U. S. Army	U. S. Navy	British	Part Number	Figure & Index No.	Total Qty.
			AN200K5	12	5
			AN200K6	83	1
			AN200K8	79	1
			AN201K10A	19-37	34
			AN201K12A	19-26	44
			AN201K16A	91-16	6
			AN201K4A	37-7	12
			AN201K8A	41-2	53
			AN207D4	12-36	34
			AN210-2A	82-16	24
			AN22-12	147-72	1
			AN227-15BS	151-38	22
			AN227-16B	151	22
			AN227-19BL	151-37	22
			AN227-20B	151	22
			AN227-8B	70-51	18
			AN227-9B	151	16
			AN23-11	76-4	2
			AN23-12	36-31	7
			AN23-13	152-19	12
			AN23-13A	164-20	8
			AN23-16	76-14	2
			AN23-17	76-12	2
			AN23-18	159	1
			AN23-20	103-41	2
			AN23-21	130-30	5
			AN23-22	152-14	1
			AN23-26A	160-16	8
			AN23-27A	20	20
			AN23-32	124-24	1
			AN23-8	73-34	2
			AN24-13A	168-32	4
			AN24-17	72-23	6
			AN24-40	158-22	3
			AN24-42	168-31	2
			AN24-9A	12-12	8
			AN25-20	72-17	6
			AN25-21	6-13	2
			AN25-23	2-41	4
			AN25-25	2-42	8
			AN25-29	13-54	8
			AN25-66	6-14	2
			AN25-78	172-2	1
			AN25-9A	12-18	32
			AN250-11U	64-53	1
			AN251-2-2	79-16	2
			AN26-14	164-5	4
			AN26-24	13-58	6
			AN26-31	13-57	8
			AN26-52	104-5	6
			AN26-54	104-24	3
			AN26-60	104-17	2
			AN27-16	167-20	16
			AN270B10	6-26	3
			AN28-16	18-12	8
			AN286-1	92	16
			AN286-2	14-16	8
			AN286-3	13-7	32
			AN286-4	154-39	11
			AN287-6	181-23	32
			AN29-66	166-7	2
			AN29-86	166-8	2
			AN3-10	19-29	10
			AN3-10A	30-5	24
			AN3-11	159	9
			AN3-11A	75-25	13
			AN3-12	54-40	10
			AN3-12A	20-9	91
			AN3-13	176-16	4
			AN3-13A	14	52
			AN3-14A	38-12	18
			AN3-15	152-8	1
			AN3-15A	16-4	18
			AN3-16	151-32	2
			AN3-16A	16-14	12
			AN3-17	157-25	1
			AN3-17A	62-16	11
			AN3-20	56-4	6
			AN3-20A	93-26	60
			AN3-21A	14-6	20
			AN3-22A	14-7	12
			AN3-23A	105	12
			AN3-25A	6-16	14
			AN3-26A	66-34	1
			AN3-27A	72-21	2
			AN3-3A	16-6	138
			AN3-32A	9-8	13
			AN3-33A	56-19	6
			AN3-34A	6-18	9
			AN3-4	66-27	5
			AN3-4A	6-40	225
			AN3-40	172-17	1
			AN3-5	67-8	8
			AN3-5A	14-5	243
			AN3-50	153-23	2
			AN3-50A	120-15	4
			AN3-6	7-8	8
			AN3-6A	20-45	389
			AN3-7	19-30	86
			AN3-7A	14-34	102
			AN3A11	78-6	4
			AN3DD6A	175-13	1
			AN30-19	18-13	2
			AN3021-6	129-13	1
			AN3022-1B	111-44	6
			AN3022-2B	108-8	46
			AN3022-3B	111-49	2
			AN3022-5B	110-19	8
			AN3022-7B	110-4	9
			AN3022-8B	112-20	9
			AN3024-1	45-9	4
			AN3034-1	129-14	2
			AN3057-16	115	1
			AN3074-1	177-4	4
			AN3096-4	114-26	1
			AN3096-5	114-24	1
			AN3096-6	114-25	1
			AN3097-2	114-27	1
			AN310-10	167	16
			AN310-16	167-42	2
			AN310-3	7	65
			AN310-4	2	228
			AN310-5	12	36
			AN310-6	94-26	39
			AN310-7	179-15	36
			AN310-8	58	3
			AN301D8	172	1
			AN3100-16-13P	45	2
			AN3100-16S4S	45	2
			AN3100-24-1S	45	2
			AN3102-16-11S	114-13	2
			AN3102-16-13P	45-20	4
			AN3102-16S4S	45-21	4
			AN3102-20-6P	45-33	4
			AN3102-24-1S	45-19	4
			AN3106-10S2S	114-15	1
			AN3106-16S6P	114-12	1
			AN3106-28-5S	115	1
			AN3121-2	110-15	16
			AN3121-301	112-15	2
			AN3121-313	108-26	37
			AN3123-301	110-16	7
			AN3124-307	110-17	5
			AN3130-4560	44-16	2
			AN3131-303	111-13	4
			AN3132-308	110-18	1
			AN3133-11	44-24	1
			AN315-3L	25	12
			AN315-3R	25	13
			AN315-4L	25	8
			AN315-4R	25	8
			AN315-5L	106-16	8
			AN315-5R	76-30	23
			AN3150	47-1	3
			AN3155-25-25	110-37	2
			AN316-10R	147-25	4

PUBLISHED BY AVIALOGS.COM

U. S. Army	U. S. Navy	British	Part Number	Figure & Index No.	Total Qty.
			AN316-4R	73-27	27
			AN316-5R	154-12	3
			AN316-6L	170-17	70
			AN316-6R	39-43	82
			AN316-7R	192-3	8
			AN3160-20A	118-12	1
			AN32-40	172-36	2
			AN32-62	172-37	1
			AN32-64	172-48	1
			AN32-86	172-4	1
			AN320-10	7-22	3
			AN320-12	172	4
			AN320-14	18	10
			AN320-20	156-13	1
			AN320-3	6	21
			AN320-4	20	57
			AN320-5	2	33
			AN320-6	13	72
			AN320-7	167	16
			AN320-8	103-23	5
			AN320D4	86-12	1
			AN3200-2	45-8	4
			AN3202-1	109-31	1
			AN3210-1	45-30	7
			AN34-50	165-13	2
			AN34-54	165-11	2
			AN34-56	165-12	2
			AN34-62	165	2
			AN34-82	166-56	2
			AN355-6	180-13	36
			AN355-7	180-18	36
			AN36-25	18-5	2
			AN36-27	18-6	4
			AN36-28	18-7	2
			AN364-1032	6	75
			AN364-428	12	27
			AN364-524	12	36
			AN364-624	58	20
			AN365-1032	6	1436
			AN365-428	2	305
			AN365-524	3	46
			AN365-624	6	10
			AN365-632	70	17
			AN365-820	68-61	11
			AN365-832	41-30	20
			AN365D428	3	65
			AN365D624	3	92
			AN366F428	13	2
			AN386-1-10	97-28	32
			AN386-1-12	19-12	1
			AN386-1-12A	63-6	1
			AN386-1-13A	62-2	2
			AN386-1-6	94-18	8
			AN386-1-6A	6-29	9
			AN386-1-7	6-39	45
			AN386-1-7A	97-20	2
			AN386-1-8A	19-36	47
			AN386-1-8A	36-33	8
			AN386-1-9	19-3	4
			AN386-10-29	2-8	4
			AN386-10A30	2-9	4
			AN386-2-10	91-18	4
			AN386-2-12	6-34	1
			AN386-2-9	19-4	4
			AN386-3-18	91-39	4
			AN386-4-9A	58-5	4
			AN386-5-17A	58-6	4
			AN386-5-23A	58-2	16
			AN386-5-24A	2-23	4
			AN386-5-27A	2-24	4
			AN386-6-14A	2-25	16
			AN386-7-27	172-19	4
			AN386-8-25	2-4	4
			AN386-8-31	2-5	2
			AN386-9-31	2-6	4
			AN386-9-32	2-7	6
			AN392-25	155-33	10
			AN393-11	82-21	2
			AN393-17	82-43	2
			AN393-19	80-9	1
			AN393-55	155-24	10
			AN393-9	92	4
			AN394-21	124-29	1
			AN394-31	124-30	1
			AN395-17	106	6
			AN4-10A	2-12	42
			AN4-11	58-38	2
			AN4-11A	147-93	23
			AN4-12	2-36	13
			AN4-12A	105-9	9
			AN4-13	58-10	8
			AN4-13A	70-14	8
			AN4-14	12-33	73
			AN4-14A	147-94	16
			AN4-15	74-13	2
			AN4-16	2-37	9
			AN4-16A	106	38
			AN4-17	58-40	1
			AN4-17A	145-4	2
			AN4-20	42-15	9
			AN4-20A	63-3	25
			AN4-21	174-26	37
			AN4-21A	80-32	12
			AN4-22	68-51	18
			AN4-22A	13-37	7
			AN4-23A	13-23	2
			AN4-24	2-33	22
			AN4-25	147-42	38
			AN4-26	56-17	2
			AN4-33A	56	1
			AN4-35	181-16	46
			AN4-36A	92-41	4
			AN4-42A	163-14	4
			AN4-43A	163-15	2
			AN4-44	90-17	1
			AN4-5A	118-26	36
			AN4-6A	80-33	15
			AN4-7A	7-5	27
			AN4H12A	17-9	16
			AN4H4	166	8
			AN4H5A	65-14	36
			AN4097-1	185-6	1
			AN4098-1	69-55	2
			AN4101-1	177-6	4
			AN415-4	168	2
			AN42-4	157-3	1
			AN42-7A	44	1
			AN486-3	116-35	1
			AN486-4	73-26	5
			AN5-10A	80-5	18
			AN5-11A	2-15	96
			AN5-13A	58-34	2
			AN5-14	12-32	8
			AN5-14A	123-13	22
			AN5-15	2-34	20
			AN5-16A	123-14	2
			AN5-37	179-16	36
			AN500-10-10	145-11	11
			AN500-10-20	150	4
			AN500-10-5	146	4
			AN500-10R8	146	8
			AN500-8-4	155	10
			AN500A10-6	155	16
			AN500A10-7	155	4
			AN500A416-8	170-25	8
			AN500C10-4	55-30	2
			AN501-10-6	168-40	18
			AN501A616-20	170-18	2
			AN502-10-12	7-28	8
			AN502-416-4	155	30
			AN502-416-6	102-3	4
			AN502-416-8	102-43	8
			AN503-516-24	170-19	12
			AN504-8R8	65-13	31
			AN505-10-6	67-19	2
			AN505-4R7	3	6

PUBLISHED BY AVIALOGS.COM

U. S. Army	U. S. Navy	British	Part Number	Figure & Index No.	Total Qty.
			AN505-416-6	155	2
			AN505-6-18	79-18	2
			AN505-6-6	70-18	4
			AN505-6-8	70-12	2
			AN505-6R10	82-42	4
			AN505-6R12	73	4
			AN505-6R14	81-9	2
			AN505-6R8	66-5	5
			AN505-8-6	13-29	2
			AN505-8R6	13-10	2
			AN505-8R8	106-42	4
			AN505-6-8	70-30	6
			AN510-10-10	77-14	8
			AN510-10-20	56-9	1
			AN510-10R10	3-13	47
			AN510-10R20	56	1
			AN510-10R28	73-8	2
			AN510-10R6	78-12	2
			AN510-10R8	5-9	654
			AN510-416R16	66-11	2
			AN510R44	85-16	4
			AN515-10R4	150	2
			AN515-6-7	3	12
			AN515-6R20	106	4
			AN515-6R6	171-16	1
			AN515-8-20	69-35	6
			AN515-8-24	69-27	2
			AN515-8-8	147-68	1
			AN515-8R10	36-35	6
			AN515-8R20	69-48	6
			AN520-10-10	82-13	2
			AN520-10-20	56-8	4
			AN520-10-40	56-6	2
			AN520-10-7	82-14	2
			AN520-10-8	106	4
			AN520-10R10	106	28
			AN520-10R12	82-7	22
			AN520-10R14	57-38	7
			AN520-10R24	57-37	3
			AN520-10R32	38-20	6
			AN520-10R36	34-23	16
			AN520-10R4	81-14	18
			AN520-10R6	106	10
			AN520-10R7	36-11	50
			AN520-10R8	34-24	68
			AN520-1032-32	38-15	4
			AN520-416R16	36-36	2
			AN525-632R6	70-37	2
			AN526-1032-24	152-29	4
			AN526-1032R8	78-42	2
			AN526-1032R10	4	426
			AN526-1032R14	81	4
			AN526-1032R16	78-49	8
			AN526-1032R28	64-41	2
			AN526-1032R4	66-23	6
			AN526-1032R5	81	8
			AN526-1032R7	68-18	24
			AN526-632R16	171-15	2
			AN526-632R4	79-5	2
			AN526-632R6	70-19	2
			AN526-832R18	64-48	4
			AN530-10R10	65-33	187
			AN530-10R12	65-21	49
			AN530-10R6	67-1	104
			AN530-10R8	76-2	53
			AN530-4R6	64-54	6
			AN530-6R6	64-49	12
			AN530-8R10	65-15	30
			AN530-8R12	65-34	16
			AN531-10R10	78-48	2
			AN531-6R10	66-26	2
			AN531-8R24	66-21	4
			AN531-8R8	3	8
			AN535-14-8	165	4
			AN550-10R7	79-17	4
			AN550-6R6	70-52	2
			AN5525-1	108-28	1
			AN5525-2	26-21	4
			AN5530-2	109-15	2
			AN565A8-4	7-26	1
			AN565B10-4	154	19
			AN565D10-6	174-29	6
			AN565D8-3	171-29	1
			AN565D8-4	167-37	7
			AN5752-1	108-51	1
			AN5754-1	44-27	1
			AN5754-2	44	1
			AN5756-1	108-52	1
			AN5756-2	108	1
			AN5760-2	109-20	2
			AN5770-2	109-14	2
			AN5771-3A	108-22	2
			AN5771-4A	108	1
			AN5771-5A	109-34	2
			AN5772-1	109-13	2
			AN5772-2	109-12	2
			AN5820-2	109-22	1
			AN5822-1	107-44	1
			AN5825-2	109-23	1
			AN5831-1	109-35	1
			AN6-12A	2-16	96
			AN6-13A	145-2	4
			AN6-21A	164-26	2
			AN6-22A	164-25	2
			AN6-32A	164-24	8
			AN6-41A	6-12	2
			AN6C10	18-17	12
			AN6C11	18-15	26
			AN6H10	14-22	4
			AN6H11	14-17	8
			AN6003-4	133-2	2
			AN6003-6	133-1	11
			AN6004-1	133-3	14
			AN6020-1	134-1	10
			AN6021-1A	133-11	7
			AN6029-1	109-37	10
			AN6041-1	134-3	11
			AN6100-1	114	2
			AN6101-1	138-31	2
			AN6221-8	166-37	2
			AN6222-8	166-38	2
			AN6224-8	166-39	2
			AN6225-3	55-17	2
			AN6225-49	173-16	4
			AN6227-11	93-21	8
			AN6227-14	126-6	1
			AN6227-18	126-5	1
			AN6227-32	170-5	2
			AN6227-49	123-8	4
			AN6228-49	173-17	1
			AN6229-3	55-18	1
			AN6230-6	55-24	1
			AN6260-4-12	108	1
			AN6260-8D45	166-15	2
			AN6260-8D45 1-2	166	2
			AN6261-8D22	166-16	2
			AN665-21L	25	12
			AN665-21R	25	16
			AN665-34L	25	8
			AN665-34R	25	8
			AN665-46L	106-13	8
			AN665-46R	106-14	8
			AN669L3LH	62-11	1
			AN669L3RH	62-14	4
			AN7-53	179-12	72
			AN7C10	18-21	14
			AN7006-1	73-51	1
			AN703-1350	25	8
			AN703-1500	25	8
			AN703-1900	25	2
			AN703-2150	25	2
			AN704-1500	25	14
			AN704-1575	25	2
			AN705-17	106-15	4
			AN705-2175	106-18	2
			AN705-2525	106-20	2

PUBLISHED BY AVIALOGS.COM

U. S. Army	U. S. Navy	British	Part Number	Figure & Index No.	Total Qty.
			AN741-18P	20-8	10
			AN748-30	106	4
			AN748-56	106	4
			AN7501	83-23	2
			AN7502-55	166-59	2
			AN7503-2	172-35	1
			AN7503-3	172-18	1
			AN771-2	23-24	4
			AN776-8D	166-34	2
			AN778-8D	166-35	2
			AN8DD13	172-33	1
			AN8-20	58-35	1
			AN8004-1	82-34	6
			AN8005-1	82-31	6
			AN8008-27	131	1
			AN8008-3	108	4
			AN809-1	123-17	4
			AN812-1	123-16	4
			AN813-1	123-18	4
			AN822-8	170-23	2
			AN840-16	23-11	6
			AN840-21	199	2
			AN840-4	28-19	9
			AN842-10	38-8	4
			AN842-16	23-4	19
			AN842-21	30-12	6
			AN842-4	28-15	20
			AN844-16	23-5	9
			AN844-21	30-13	4
			AN844-4	43	4
			■ AN846-16	177	1
			AN855A2A	107-15	8
			AN878-16-26	21-26	3
			AN878-16-44	21-9	5
			AN878-16-54	21	2
			AN878-4-118	26-53	2
			AN878-4-122	27-52	2
			AN878-4-136	190	1
			AN878-4-146	26-51	3
			AN878-4-24	188-10	3
			AN878-8-10	191	1
			AN878-8-25	26	1
			AN878-8-28	26	1
			AN884-10-72	24-42	2
			AN884-10-80	24-39	2
			AN884-10-84	24-37	2
			AN884-4-32	43-16	4
			AN884-6-84	107-12	1
			AN884-8-14	106	2
			AN900-16	23-22	4
			AN900-40	38-5	4
			AN900-41	28-9	9
			AN900-6	19-39	18
			AN901-5C	123-15	4
			AN902-10	170-3	4
			AN902-20	170-11	2
			AN905-6	156-18	2
			AN906-16	106	2
			AN906D6	79-20	2
			AN911-8	30-10	2
			AN913-1S	168-11	2
			AN913-2	170-21	2
			AN914-6	106-45	2
			AN916-8	30-11	2
			■ AN924-16	177	1
			AN924-8D	166-36	2
			AN935-8L	36	2
			AN936A10	67	2
			AN936A8	65	31
			AN936B10	94-3	1
			AN936B616	65-40	2
			AN960-10	6	146
			AN960-10L	25	49
			AN960-1416	18	10
			■ AN960-2116L	177	2
			AN960-416	2	206
			AN960-416L	145	2
			AN960-516	3	111
			AN960-616	14	95
			AN960-716	179-14	72
			AN960-816	58	14
			AN960A10L	78	24
			AN960A2616	166-25	8
			AN960A616L	78	4
			AN960B2616	166-24	8
			AN960B8	64-17	5
			AN960C10L	85-14	2
			AN960D10	5	284
			AN960D10L	5	126
			AN960D16	76-29	28
			AN960D416	5	52
			AN960D416L	77-29	8
			AN960D616	75	60
			AN960D816	101-53	1
			AN970-4	29-13	12
			AN975-3	6	86
			AN975-5	58	4
			AN975-6	58	20
			AOS1-505	168-7	2
			AOS1-1031	167-50	2
			AOS1040	166-53	2
			AS27ARN5	128	1
			AT5	153-16	3
				153-21	
			AX5	161-16	42
				162-23	
			AYLC5091	36-23	2
				45-36	
			A10028	124-6	1
			A10039	124-27	1
			A101-1	157-21	2
			A12199	86-22	6
			A12202	86-19	1
			A12203	86-20	2
			A12204	86-17	1
			A12206	86-18	1
			A12493	86-7	1
			A12494	86-9	1
			A12835	86-2	1
			A12978	86-3	1
			A1317-1	154	1
			A13512	86-11	1
			A13513	86-13	1
			A13516	86-5	1
			A14234	86-16	2
			A14578	86-24	4
			A14623	86-4	3
			A14765	85-4	1
			A14771	85-10	2
			A14773	85-11	2
			A15112	86-10	1
			A1512-2	184-2	1
			A1521	172	2
			A15274	86-6	1
			A15419	86	1
			A15502	86-23	2
			A16055	85	2
			A207D4	56	4
			A219-95A	91-10	2
			A303-8A	124-5	1
			A313-3	161-20	4
				162-27	
			A4050	154-41	4
			A4138	68-31	4
				69-11	
			A449-1	157-5	2
				157-10	
			A50	145-12	2
			A507-4	36-5	8
			A542	154	1
			A546	91	4
			A8048	124-20	1
			A8093	124-17	1
			A8096	124-8	1
			A8097	124-10	1
			A8098	124-7	1
			A8102	124-14	1
			A8103	124-12	1
			A8110	124-15	1

PUBLISHED BY AVIALOGS.COM

U. S. Army	U. S. Navy	British	Part Number	Figure & Index No.	Total Qty.
			A8113	124-3	1
			A8114	124	1
			A8115	124-18	1
			A8116	124-19	1
			A855KX	21-44	4
				105-23	
				198-1	
			A855NX	21	4
				105	
				198	
			A855RX	21-49	6
				22-20	
				105-24	
				198	
			BAC1001-12	103-5	1
			BAC1001-18	90-14	2
			BAC1001-27	94-20	2
			BAC1001-29	102-25	2
			BAC1001-6	94-16	1
			BAC1002-10	156-34	2
			BAC1002-20	45	2
			BAC1002-6	144-8	1
			BAC1002-8	19-33	12
			BAC1099-1032DD	175	1
			BAC1099B10	91-19	2
			BAC1448-10-14	70-3	36
			BAC1449-8-8	70-8	8
			BAC1457-10-205	64-20	29
			BAC1470-10-10S	5-17	4
			BAC1470-10-8S	5-4	152
			BAC1470-428-28S	77-31	2
			BAC1470-428-7D	70-41	8
			BAC1554-51-27	163-8	24
			BAC1554-51-30	163-21	4
			BAC1554-51-33	81	6
			BAC1554-63-27	163-11	15
			BAC1554-63-30	163-37	4
			BAC1555-3	163-59	2
			BAC1555-5	163-58	28
			BAC1601-19	157-20	1
			BAC1603-10	143-12	2
			BAC1603-112	56-7	2
			BAC1603-133	6-19	2
			BAC1603-136	6-20	4
			BAC1603-137	6-21	2
			BAC1603-14	76-15	3
			BAC1603-19	76-10	4
			BAC1603-20	163-72	4
			BAC1603-24	163-23	2
			BAC1603-30	57-35	3
			BAC1603-32	56-10	6
			BAC1603-35	153-24	2
			BAC1603-45	153-30	2
			BAC1603-64	57-24	6
			BAC1603-65	57-50	2
			BAC1603-68	157-29	1
			BAC1603-69	57-34	1
			BAC1603-72	158-33	2
			BAC1603-8	67-22	6
			BAC1603-84	144-16	2
			BAC1603-85	153-26	2
			BAC1603-86	158-31	2
			BAC1603-91	14-8	12
			BAC1603-94	153-28	2
			BAC1603-96	14-10	10
			BAC1604-108	3-36	4
			BAC1604-12	90-5	1
			BAC1604-140	3-21	8
			BAC1604-31	68-50	2
			BAC1604-34	68-49	2
			BAC1604-38	41-19	3
			BAC1604-48	41-20	1
			BAC1604-50	42-18	1
			BAC1604-60	13-21	8
			BAC1604-68	147	3
			BAC1604-8	163-57	4
			BAC1605-36	13-56	6
			BAC1605-56	76-27	8
			BAC1605-60	13-18	10
			BAC1606-105	18-26	22
			BAC1606-38	184-29	4
			BAC1606-8	164-27	4
			BAC1606-95	18-31	22
			BAC1607-105	18-25	8
			BAC1607-95	18-30	8
			BAC1608-119	143-67	1
			BAC1608-135	108-34	1
			BAC1608-17	144-4	1
			BAC1608-21	143-19	2
			BAC1608-34	94-13	1
			BAC1608-40	103-3	1
			BAC1608-41	41-13	2
			BAC1608-44	108-31	1
			BAC1608-57	143-64	1
			BAC1608-8	41-8	2
			BAC1804-16-6R	80-8	1
			BAC1804-21-3R	80-7	1
			BAC1807-108-OL	143	1
			BAC1807-120-OL	143-37	1
			BAC1807-49-3R	143-32	1
			BAC1807-58-OR	143-33	1
			BAC1824-206-203	80-20	1
			BAC1824-206-248	80-19	1
			BAC1824-307-1060	39-46	1
			BAC1824-307-1070	40-18	1
			BAC1824-307-1166	39-47	1
			BAC1824-307-1878	39-25	1
			BAC1824-307-1880	40-39	1
			BAC1824-307-1956	39-26	1
			BAC1824-307-1978	40-38	1
			BAC1824-320-2751	63-7	1
			BAC1824-607-1081	91-24	1
			BAC1824-607-901	91-25	1
			BAC1824-610-1039	91-22	1
			BAC1824-610-837	91-23	1
			BAC1831-13	63	1
			BAC1833G106-256	57-9	2
			BAC1833G388-766	57-6	1
			BAC1833G548-940	57-7	1
			BAC1833J106-256	57-10	2
			BAC1833J230-463	57-8	1
			BAC1833J74-194	57-5	1
			BAC1834-307-1185	40-19	1
			BAC1851-16	19	27
			BAC1861-2-47	186-3	1
			BAC1861-2-55	187-3	2
			BAC1861-2-72	187-4	1
			BAC1861-2-73	186	1
			BAC1861-23-75	186	2
			BAC1861-23-78	187-6	2
			BAC1861-23-80	37-3	2
			BAC1861-23-82	37	1
			BAC1861-23-83	187-8	1
			BAC1861-23-97	186	1
			BAC1861-24-100	186-5	4
			BAC1861-24-120	37	1
			BAC1861-24-124	186	1
			BAC1861-24-126	187-7	2
			BAC1861-24-130	186-2	2
			BAC1861-24-136	187-2	2
			BAC1861-24-148	186	1
			BAC1861-24-150	186-7	1
			BAC1861-24-170	37-4	2
			BAC1861-24-179	187-5	4
			BAC1861-24-289	186-4	1
			BAC1861-24-291	186-8	1
			BAC1861-24-315	187	1
			BAC1861-24-326	187	1
			BAC1861-4-119	101	1
			BAC1861-4-180	101	1
			BAC1907-2	66-6	3
			BAC1908-31AL	28-10	8
			BAC1908-43AL	64-25	32
			BAC1908-55K	64-23	32
			BAC1908-63AL	4	47
			BAC1908-64K	64-24	32

PUBLISHED BY AVIALOGS.COM

U. S. Army	U. S. Navy	British	Part Number	Figure & Index No.	Total Qty.
			BAC1909-13	163-20	6
			BAC1909-3	163-7	32
			BAC1909-4	163-44	87
			BAC221-10-54	10-4	18
			BAC221-12-55	10-5	16
			BAC272S54-13	58-41	2
			BAC274CS4-104	158-21	1
			BAC274S3-30	56-5	8
			BAC274S3-9	92-37	2
			BAC285-32S	75-4	1
			BAC326-15S	92-40	4
			BAC326-17S	77-28	6
			BAC326-18S	182-14	16
			BAC326-34S	92-35	4
			BAC326-645	77-32	2
			BAC340-4-197	78	1
			BAC340-8-970	57-29	4
			BAC344-4-439	73	2
			BAC344-5-253	12	40
			BAC364-17S	76-5	2
			BAC366-18S	182-13	8
			BAC366-21ST	182-51	56
			BAC540-10	106	4
			BAC543-12-16	151-7	8
			BAC569-20HF	184-3	3
			BC1033	130	1
			BC1366	132	11
				132-58	
			BC306	130-38	1
			BC347	130-18	1
			BC348	130-13	1
			BC357	130-56	1
			BC366	132	12
				132-2	
				132-14	
				132-20	
				132-28	
				132-42	
				132-44	
				132-65	
			BC4W10	41-18	8
				42-17	
				75	
				75-5	
				161	
				162	
			BC433	129-7	1
			BC434	129-10	1
			BC434A	129-1	1
			BC442A	130-9	1
			BC450A	129-12	1
			BC451A	129-11	1
			BC453A	130-5	1
			BC454A	130-6	1
			BC455A	130-7	1
			BC456A	130-24	1
			BC456E	130-11	1
			BC458A	130-3	1
			BC459A	130-4	1
			BC602B	129	1
			BC624	130-46	1
			BC625	130-45	1
			BC645A	131-22	1
			BC646A	131-1	1
			BC648A	131-29	1
			BC706A	131-28	1
			BC727	131-23	2
				131-34	
			BC732A	135-11	1
			BC733	131	1
			BC765	118	2
				131	
			BC767	130-51	2
				130-55	
			BC927	131-6	1
			BC958A	131-32	1
			BC965A	131-31	1
			BC966A	130-50	3
				130-53	
				131-33	
			BK22	129-3	1
			BS44	175-25	1
			BZ-RQ41	157	2
			B10017	124-22	1
			B10029	124	1
			B10030	124-21	1
			B10031	124-2	1
			B12180	85-17	2
			B12496	86-15	1
			B14091	85-13	2
			B14555	86-14	1
			B14767	85-7	2
			B15418	86-8	1
			B15468	86	2
			B16010	85-12	2
			B16054	85	2
			B2-1741-1	136-43	1
				137-1	
				206-2	
			B25	66-4	1
			B50088	85-9	2
			B55	56	46
				161	
				162	
			B8092	124-13	1
			CA275X	45-7	14
				46-16	
				85-18	
				111-50	
				113-11	
				113-23	
				114-23	
				116-12	
				130-17	
				138-30	
			CD508	132-17	3
				132-25	
				132-46	
			CQ1	108-47	1
			CS80	130-47	1
			C1B	130-23	1
			C4ARN7	129	2
			C6363-2-20A	111-82	1
			DL445	139-14	1
				201-2	
			DM32A	130-8	3
			DM33A	130-12	2
				130-25	
			DM53	131-19	1
			DS6351	147-54	2
			DS6355	147-74	2
			DS6356	147-58	4
			DS6357	147-57	4
			DS6764	147-53	1
			DS6769	147-52	1
			D10231	121-46	1
				124-1	
				199-1	
			D12184	85-3	1
				86-1	
			D12201	86-21	1
			D12364	85-1	1
				110-31	
			D129712-1	45-13	2
			D14770	85-5	1
			D14776	85-6	1
			D15897	85	1
			D15898	85	1
			EA15-10	25-43	2
				44-36	
				198-7	
			EA15-11	25-44	2
				44-37	
				198-8	
			EA15-12	25-45	2
				44-38	

PUBLISHED BY AVIALOGS.COM

U. S. Army	U. S. Navy	British	Part Number	Figure & Index No.	Total Qty.
				198-9	
			EA15W	25	6
				44	
				198	
			EA47-2C	109-8	1
			E120386	136-71	1
				206-6	
			FC163-10-1	50-2	1
				201-6	
			FC163-10-2	50	1
				201-7	
			FC163-4-1	50-1	1
				201-4	
			FC163-4-2	50	1
				201-5	
			FC163-8-1	58-42	4
				61-1	
				201-8	
			FC163-9-1	58-43	2
				61-9	
			FLLF	45-24	4
			FLLH	45-10	4
			FL8	132-10	2
			FSH	45-11	4
				45-25	
			FT107	131	1
			FT213	129	1
			FT222A	129	1
			FT228	129	1
			FT247	131	1
			FT248A	131	1
			FT251A	131	1
			FT255A	131	1
			FT256A	131	1
			FT292	131-12	1
			FT293	131	1
			FT345A	131	1
			FT446	131	1
			F10000	209-3	1
			F10100	209-2	1
			F10200	207-2	1
			F10300	208-3	1
			F10400	207-2	1
			F10500	208-2	1
			F10700	207-1	1
			F10800	209-1	1
			F10900	208-1	1
			F11000	208-4	1
			F20000	213-3	1
			F20001	213-2	1
			F20003	213-5	1
			F20200	214-3	4
				215-2	
				216-2	
				217-2	
			F20301	211-6	4
				215-3	
				216-3	
				217-3	
			F20410	211-2	4
				215-4	
				216-4	
				217-4	
			F20411	211	4
				215-5	
				216-5	
				217-5	
			F20412	211	4
				215-6	
				216-6	
				217-6	
			F20413	211	4
				215-7	
				216-7	
				217-7	
			F20510	211-4	4
				215-8	
				216-8	
				217-8	
			F20601	214	4
				215-9	
				216-9	
				217-9	
			F20701	214-5	4
				215-10	
				216-10	
				217-10	
			F20801	214-1	1
			F20802	214	4
				215-11	
				216-11	
				217-11	
			F20803	214	2
				217-12	
			F20900	210-1	7
				215-12	
				216-13	
				217-13	
			F21001	117-7	5
				216-14	
				217-14	
			F21002	117	5
				216-15	
				217-15	
			F21003	117	5
				216-16	
				217-16	
			F21004	117	5
				216-17	
				217-17	
			F21005	117	5
				216-18	
				217-18	
			F21006	117	5
				216-19	
				217-19	
			F21126	211-3	4
				215-13	
				216-20	
				217-20	
			F21200	117-9	3
				216-21	
				217-21	
			F21300	214-2	1
			F21400	210-3	2
				217-52	
			F21500	210-4	2
				217-53	
			F21601	117-3	3
				216-22	
				217-22	
			F21602	117	3
				216-23	
				217-23	
			F21603	117	3
				216-24	
				217-24	
			F21701	117-4	3
				216-25	
				217-25	
			F21702	117	3
				216-26	
				217-26	
			F21801	117-5	3
				216-27	
				217-27	
			F21802	117	3
				216-28	
				217-28	
			F21901	211-1	4
				215-14	
				216-29	
				217-29	
			F21902	211	4
				215-15	

PUBLISHED BY AVIALOGS.COM

U. S. Army	U. S. Navy	British	Part Number	Figure & Index No.	Total Qty.
				216-30	
				217-30	
			F21903	211	4
				215-16	
				216-31	
				217-31	
			F21904	211	4
				215-17	
				216-32	
				217-32	
			F21905	211	4
				215-18	
				216-33	
				217-33	
			F21906	211	4
				215-19	
				216-34	
				217-34	
			F21907	211	4
				215-20	
				216-35	
				217-35	
			F21908	211-5	4
				215-21	
				216-36	
				217-36	
			F21914	211	4
				215-22	
				216-22	
				217-22	
			F22101	213-4	4
				215-23	
				216-37	
				216-38	
				217-37	
				217-38	
			F22101	213-4	4
				215-23	
				216-38	
				217-38	
			F22102	213	4
				215-24	
				216-39	
				217-39	
			F22200	210-2	1
			F22600	210-5	3
				216-40	
				217-40	
			F22700	117-6	1
			F22800	117-8	1
			F23001	117-1	1
			F23002	117	1
			F23003	117	1
			F23004	117	1
			F23005	117	1
			F23006	117	1
			F23007	117	1
			F23105	117-2	1
			F23106	117	1
			F23108	117	1
			F23109	117	1
			F23110	117	1
			F23501	214-4	1
			F23502	214	1
			F23503	214	1
			F23504	214	1
			F23505	214	1
			F23506	214	1
			F23507	214	1
			F23508	214	1
			F23509	214	1
			F23510	214	1
			F23701	213-1	4
				215-25	
				216-41	
				217-41	
			F23702	213	4
				215-26	
				216-42	
				217-42	
			F23703	213	4
				215-27	
				216-43	
				217-43	
			F23704	213	4
				215-28	
				216-44	
				217-44	
			F23705	213	4
				215-29	
				216-45	
				217-45	
			F23706	213	4
				215-30	
				216-46	
				217-46	
			F23707	213	4
				215-31	
				216-47	
				217-47	
			F23708	213	1
			F23709	213	4
				215-32	
				216-48	
				217-48	
			F23710	213	1
			F23711	213	4
				215-33	
				216-49	
			F23712	213	1
				217-49	
			F23713	213	1
			F23714	213	1
			F23715	213	4
				215-34	
				216-50	
				217-50	
			F23800	215	1
			F23801	215-1	1
			F23900	216	1
			F23901	216-1	1
			F24000	217	1
			F24001	217-1	1
			F609-3	36-15	4
			F61800	213-6	2
				217-51	
			G-R	171-14	1
			G1028A6CA1	98	4
				98-10	
			G10340	112-12	1
				122-50	
				200-1	
			G1057A3CA1	43-10	4
				43-22	
			G1057A4CA1	43	4
			G1060A1CA1	119	6
				119-22	
				119-26	
			G1065A	43-24	2
			G1065A1CA1	43-1	2
			G1066A1CA1	119-27	1
			G1075A2	43-12	4
				43-23	
			G1080A3	118-24	2
			G1081B1	118-29	1
			G1235A1CA1	118-27	1
			G1235B1CA1	118	1
			G16A2CA1	43-15	4
				43-25	
			G3-217A	172-5	1
			G303A-Y2CA1	43-2	4
				43-17	
			G403A	119-23	1
			G403A1CA1	119	7
				119-19	
				119-20	

PUBLISHED BY AVIALOGS.COM

U. S. Army	U. S. Navy	British	Part Number	Figure & Index No.	Total Qty.
				119-25	
			HS33	132-63	9
			H2-258-1	166-48	2
			H2-259-1	166-49	2
			H3-101M	166-57	2
			IE678	111-79	1
				121-66	
				126-1	
				199-4	
			IN79	127-39	3
				128-19	
			IN88	127-34	4
				127-42	
			JH1197	185-2	1
			JH1271	185-4	1
			JH3R	177-5	4
				185-14	
			J1246-3	176-15	4
			J37	130-14	1
			LLB50-34	146	1
			LLB50-46	146	4
				147	
				149	
			LLB50-63	151	2
			LLB50-68	146	1
			LLB50-76	150	1
			LLB50-80	146	2
				150	
			LLB50-91	146	1
			LLB50G1	146	8
				147	
				149	
				150	
				151	
			LLB50M3	146	8
				147	
				149	
				150	
				151	
			LN2	113	1
			LP21AM	127-52	1
			L20678-502	127-7	2
				127-10	
			L20699-502	127-11	1
			MC124-112	129-6	1
			MC124-30	129-4	1
			MC124-97	129-9	1
			MC163	127	1
			MC203	129-5	1
			MC215-105	127	1
			MC215-127	127-4	1
			MC215-214	129-16	1
			MC215-221	129-17	1
			MC215-228	129-18	1
			MC385	132-7	13
				132-16	
				132-23	
				132-29	
				132-36	
				132-43	
				132-50	
				132-55	
				132-57	
				132-60	
				132-69	
			MC432A	128-9	1
			MC461	127-3	1
			MT28ARN5	131	1
			M19336	157-6	1
			M2	45-31	21
				113-22	
				115-29	
				145-8	
				146-1	
				147-56	
				148-5	
				149-9	
				150-1	
				150-31	
				151-1	
			M299	130-21	1
			M361	81-7	4
			M441M2	30-1	4
				45-37	
				198-6	
			M451	161	42
				162	
			NAS2-301	181-14	14
			NAS221-11	76-8	4
			NAS221-14	67-20	10
				76-9	
				166-60	
			NAS221-16	78-21	4
			NAS221-28	66-31	2
			NAS221-8	3-12	304
				36-34	
				78-8	
			NAS222DD9	70-4	28
				70-23	
				70-54	
			NAS224-13	73-41	2
			NAS43C4-232	29-11	8
			NAS43C6-32	29-12	8
			NAS51-37	147-48	6
			NAS53-7-5	7-29	2
			NAS53-10	7-30	2
			NAS52-23A	15-17	4
			NAS53-56A	15-18	4
			NAS53A10	78-15	4
			NAS53A10-5S	7-23	1
			NAS53A11-5	58-31	2
			NAS53A23-5	14-9	2
			NAS53A27-5	79-31	2
			NAS53A34-5	6-18	2
			NAS53A7	78-26	4
			NAS53S22A	15-16	4
			NAS54-11	63-14	2
				96-18	
			NAS54-115	62-18	1
			NAS54-22-5	13-35	22
				15-25	
			NAS54-22A	13-19	2
			NAS54-23-5A	13-20	14
			NAS54-34	10-17	8
			NAS54-7-5	96-15	1
			NAS54A10	14-23	8
			NAS54A10-5DD	5-14	16
			NAS54A13	155-38	2
			NAS54A13-5DD	5-15	4
			NAS54A21S	2-39	8
			NAS54A22	80-23	1
			NAS54A24DD	12-22	28
				12-26	
			NAS54A26	83-21	1
			NAS54A26-5	3-43	6
			NAS54A27	3-26	14
				3-44	
			NAS54A27-5	3-28	8
			NAS54A27-5DD	3-39	8
			NAS54A27DD	3-23	4
			NAS54A32-5	10-18	16
				10-35	
			NAS54A34	10-34	11
				169-59	
			NAS54A35	169-60	1
			NAS54A5-5	14-25	16
			NAS54A6-5	3-24	8
			NAS54A7	3-22	56
				3-38	
				14-24	
			NAS54A7-5DD	5-13	4
			NAS55-23-5A	13-16	2

PUBLISHED BY AVIALOGS.COM

U. S. Army	U. S. Navy	British	Part Number	Figure & Index No.	Total Qty.
			NAS55-24-5A	13-17	10
			NAS55-32-5A	75-22	4
			NAS55-33-5A	75-20	24
			NAS55-33-5DD	10-16	8
			NAS55A10	14-27	4
			NAS55A11	14-26	14
			NAS55A13	58-32	2
			NAS55A22	3-6	8
			NAS55A32-5DD	10-15	32
				10-33	
			NAS55S22-5	13-34	2
			NAS55S23-5A	13-33	2
			NAS55S25-5A	80-3	2
			NAS56-32	18-28	22
			NAS56-37	18-23	22
			NAS56-50-5	179-3	72
				180-9	
			NAS56A27-5DD	3-27	22
				3-45	
			NAS56A30DD	3-29	22
				3-46	
			NAS56A31	149-6	2
			NAS56A34	10-13	8
				10-20	
				10-27	
			NAS56A36	10-2	4
				10-8	
			NAS56A40-5	10-28	2
			NAS56DD32-5A	75-12	12
			NAS56DD33A	75	8
			NAS56DD34A	75-14	12
			NAS57-30-5	18-29	4
			NAS57-32-5	18-27	4
			NAS57-34-5	18-22	4
			NAS57-37-5	18-24	4
			NAS57A40	10-22	2
			NAS57A41-5	10-21	2
			NAS57S435	151-4	2
			NAS58A35-5	10-6	8
				10-12	
				10-25	
				10-31	
			NAS60-43-5	172-21	2
			NAS60A43	10-9	2
			NAS62-44-5	10-3	2
			NAS75-3-028	64-42	2
				76-58	
			NAS75-4-009	182-29	8
				182-32	
			NAS75-4-011	182	56
			NC28-24V	110	2
			N1807	166-33	4
			PE101A	131-24	1
			PE206	131-36	1
			PE73B	130-49	1
			PE86	130-16	1
			PE94C	130-54	1
			PI1A1	98	1
			PK84XA48-10	66-9	1
			PL176	128	2
			P101	70	5
				79-6	
				79-21	
			P101-447	66-7	1
			R-RS	172-12	1
			RD4550	54-41	1
				177-7	
				203-5	
			REB3N	109	9
				164-13	
			RE3ML6-2N	182-5	68
				182-42	
			RE3M6-2N	43	76
				182-6	
				182-43	
			RE3M63	39-42	3
				40-36	
			RG4430-2	105-6	1
				113-27	
				198-13	
			RL15-1	179-19	36
			RL15-10	179-7	72
			RL15-12	179-13	36
			RL15-13	179-17	72
			RL15-2	179-10	4
			RL15-21	179-8	72
			RL15-22	179-18	72
			RL15-3	179-11	12
			RL15-4	179-2	36
			RL15-5	179-5	72
			RL15-9	179-6	72
			RL15SA3	179	36
			RL42A	127-2	1
			RS2	110-11	4
				110-29	
			RWP7	108	1
			R1125A	131-15	1
			R1335	131-7	1
			R1820-97	177-1	4
			R3082	111-26	1
			R3090	128-11	1
			R400-41	126	1
			R400-42	126	1
			R400-43	126	1
			R400-71	126-28	1
			R400-72	126	1
			R400B21	126-24	1
			R47ARN5	131-25	1
			R5ARN7	129	1
			R89ARN5A	131-26	1
			SA3A	131	1
			SC-C324D	129-20	2
			SCA419	127-38	4
				127-50	
			SCR211AA	130-43	1
			SCR578	130-35	1
			SKE11779	98-5	1
			SP2475	148-1	1
			SP4720	148	1
			SW181	131-2	1
			SW223	127	1
			SW225	127	1
			SO158A	131-30	1
			S10FT	156	3
			S10K	154	8
				156	
				169-10	
				169-38	
			S12FT	154-33	4
				156-5	
			S12K	156	3
				169-5	
			S8K	154	2
				156	
			TFD12000	23-27	4
				44-33	
				198-4	
			TLS26	116-17	1
			TU26B	130-41	1
			TU5B	130-26	1
			TU6B	130-27	1
			TU7B	130-28	1
			T30	132-6	15
				132-11	
				132-19	
				132-24	
				132-34	
				132-41	
				132-45	
				132-53	
				132-62	
				132-66	
			T46914	111-17	1
			UB1	73	2
				78-32	

PUBLISHED BY AVIALOGS.COM

U. S. Army	U. S. Navy	British	Part Number	Figure & Index No.	Total Qty.
			UC1070	30	4
				45	
				198	
			U19ARN	131-27	1
			U4216-1	106	2
			U4218-1	106-40	2
			VJR24B5	45-35	4
			WW8456556	33	6
				34	
			WZ-RQ41	157-12	2
			WZR31	113-24	1
				155-35	
			YZR31	113-21	1
			038244	82-32	2
			066424	45-15	3
				148-8	
			066650	106-49	2
			066654	108	2
				136-31	
			070618	78	3
				82-4	
			07087	155-12	5
			07100	168-5	4
			07196	68-30	8
				69-10	
				168-6	
			074272	83-24	2
				84-21	
			074837-1	109-32	1
			074837-2	109	1
			0956	116-19	1
			1-12713-1	24-18	4
			1-128966	21-46	4
			1-128969	21-45	4
			1-12946-1	127	5
				127-51	
			1-12965	28-13	9
				38-4	
				123	
			1-14068	106	4
			1-14525-040-072	13	2
			1-15573-80-61	96-24	1
			1-16056-19-6	28-8	12
			1-16056-28-6	14-13	6
			1-16056-4-3	14-12	6
			1-16056-9-6	28-7	12
			1-16061	92-23	2
			1-16061-1	92-24	2
			1-16064	128	2
			1-16285	102-32	2
			1-16285-1	102-24	1
			1-16321-1	163-34	2
			1-16322	163-31	2
			1-16326	163-32	2
			1-16365	147-62	1
			1-16366	147-63	1
			1-16373	147-64	1
			1-16378	76-6	1
			1-16378-1	76-7	1
			1-16380	76-11	1
			1-16381	76-13	1
			1-16382	147-65	1
			1-16604	17-3	12
				17-18	
			1-16605	17-4	12
				17-19	
			1-16606	17-2	12
				17-17	
			1-16656	136-44	3
				143-6	
			1-16656-1	143	6
			1-16658	54-6	1
			1-16668-6-29	143-17	2
			1-16668-7-24	143-9	1
			1-16669	143-16	2
			1-16755	91-33	4
			1-16964	75-3	1
			1-17014	147-31	2
			1-17235	184-10	2
				185-12	
			1-17244	114-10	2
				115-10	
			1-17357	12	1
			1-17357-1	12-11	1
			1-17389	91-29	4
			1-17461	18-8	4
			1-17507	73-28	2
			1-17551	81-29	1
			1-17552	106	4
				106-9	
			1-17553	106-34	4
			1-17554	106	4
				106-10	
			1-17555	106-33	8
			1-17565-1	115	NP
			1-17568	37-2	2
			1-17579	182-44	53
			1-17579-4	182	56
			1-17588	33-18	4
				37-15	
			1-17588-3	34-18	4
				37-13	
			1-17588-4	42-14	1
			1-17588-5	41-9	2
				42-9	
			1-17633	127	NP
			1-17633-1	127	NP
			1-17633-3	127	NP
			1-17633-4	127	NP
			1-17633-5	127	NP
			1-17633-6	127	NP
			1-17640	73-4	1
			1-17847	161	38
				161-5	
				162	
				162-4	
			1-17847-1	161	38
				161-4	
				162	
				162-5	
			1-17897	161	76
				161-10	
				162	
				162-12	
			1-17910-0	121	4
			1-17910-1-0	121	2
			1-17911	91-14	2
			1-17998	91-2	2
			1-18050-12	83-18	2
			1-18065	147-39	1
			1-18067	147-36	3
			1-18071	83	2
			1-18073	83	2
				83-30	
			1-18075	172-14	1
			1-18076	172-15	1
			1-18077	171-2	1
			1-18089	101-18	2
			1-18095	172-28	1
			1-18097	172-29	1
			1-18098-17-1	40-40	1
			1-18098-17-6	39-28	1
			1-18098-17-7	40-49	1
			1-18106	37-1	1
			1-18112	5-6	60
			1-18117	39	2
				40-26	
			1-18117-1	39-32	2
				40	
			1-18127	39-33	8
				40-27	
			1-18129	7-12	1
			1-18143	147-32	4

PUBLISHED BY AVIALOGS.COM

U. S. Army	U. S. Navy	British	Part Number	Figure & Index No.	Total Qty.
			1-18144	147-26	2
			1-18145	147-24	2
			1-18146	147-30	2
			1-18147	147-29	2
			1-18148	147-34	4
			1-18160	147-27	2
			1-18169-38	151-6	2
			1-18191-1	59-22	4
			1-18192-1	59-23	2
			1-18208	37	1
			1-18209	59-5	2
			1-18230	59-26	2
			1-18241	39-34	4
				40-28	
			1-18244	143-62	1
			1-18245	143-61	1
			1-18246	108-32	2
				136-39	
			1-18253	152-22	1
			1-18256	80-28	1
			1-18257	96-14	1
			1-18262	80-30	1
			1-18263	152-18	1
			1-18264	152-27	1
			1-18266-1	70-15	9
				70-33	
				70-63	
			1-18266-2	70-2	12
				70-21	
				70-39	
				70-53	
			1-18266-3	70-16	9
				70-34	
				70-64	
			1-18280	152-11	1
			1-18282	39-40	4
			1-18282	39-40	4
				40-34	
			1-18283	39-38	4
				40-32	
			1-18283-2	39-35	4
				40-29	
			1-18289	62-6	2
			1-18292-48-222	160-26	2
			1-18292-48-330	160-25	2
			1-18295	151-35	4
			1-18296-4	152-4	1
			1-18298	163-42	31
			1-18298-1	163-43	18
			1-18298-17	163-62	6
			1-18298-18	163-63	2
			1-18298-8	147-38	1
			1-18302	152-6	1
			1-18304	80-6	1
			1-18319	152-26	1
			1-18323	159-14	1
			1-18327-36-1	95-12	1
			1-18332	83-7	2
				83-11	
			1-18338	147	1
			1-18356	163	3
			1-18371	142-20	2
			1-18372	173	1
			1-18374	173-9	1
			1-18375	173-6	1
			1-18379	77-15	4
			1-18380-6-191	36-28	4
			1-18380-8-173	36-29	2
			1-18380-8-199	161	32
				162	
			1-18380-8-250	77-30	8
			1-18382	114	2
				115	
			1-18385	77-9	2
			1-18388	66-14	1
			1-18393	77-12	4
			1-18399	83	1
			1-18401	77	2
			1-18407	151-8	4
			1-18411	83-8	2
			1-18415	73-30	2
			1-18421	92-21	2
			1-18437-1	25-41	6
			1-18446	62	3
				63	
			1-18448	66-17	1
			1-18450	163-33	2
			1-18451	163-35	2
			1-18452	163-30	2
			1-18457-1	77-13	8
			1-18462	66-18	1
			1-18463	171-19	1
			1-18464	59	1
			1-18465	127-24	4
				127-41	
			1-18491	96-17	1
			1-18494	6-32	5
				62-1	
				62-13	
			1-18498	77-35	1
			1-18509-5	109-24	1
			1-18517	62	1
			1-18517-1	62	1
			1-18519	163-17	2
			1-18521	78-4	1
			1-18528	62-5	2
			1-18536-8-199	161	32
				162	
			1-18539	96-8	1
				162	
			1-18540	106-3	8
				106-6	
			1-18557	73-17	1
			1-18557-1	78-58	1
			1-18557-13	78-33	1
			1-18560	77-10	2
			1-18560-1	77	2
			1-18563	79	2
			1-18566	82-35	1
			1-18569-1	106	1
			1-18578	66	1
			1-18578-1	66-15	1
			1-18578-2	66-13	1
			1-18579	142-23	3
				142-34	
			1-18580	6-33	1
			1-18597	172-10	1
			1-18603	192-9	8
			1-18604	192-11	4
			1-18607-1	59-40	1
			1-18609-1	172-11	1
			1-18619	23-21	2
			1-18642	171-18	1
			1-18643	171-12	1
			1-18644	171-13	1
			1-18651	58	2
				58-30	
			1-18652	75-17	1
				96-12	
			1-18661-3	78-56	1
			1-18661-4	78-55	1
			1-18683	78-13	1
			1-18683-1	78-14	1
			1-18703	7-10	1
			1-18715	171-5	1
			1-18740	168-36	6
			1-18756-1	106	1
			1-18756-2	106	1
			1-18757	52-22	2
				136-75	
			1-18776	172-42	1
			1-18778	83-33	2
			1-18789	78-43	1
			1-18795	39-37	6
				40-31	
			1-18815	81-30	1

PUBLISHED BY AVIALOGS.COM

U. S. Army	U. S. Navy	British	Part Number	Figure & Index No.	Total Qty.
			1-18822	78-16	2
			1-18824	59-41	1
			1-18828	50-20	4
			1-18842	78	1
			1-18842-1	78	1
			1-18844	143-68	1
			1-18845-5-90	108	1
			1-18849	66-12	1
			1-18862	78	1
			1-18863-1	78-46	1
			1-18865	106-48	2
			1-18866	106-41	2
			1-18895	29-6	8
			1-18896	111	1
			1-18898	7-11	1
			1-18909	192-13	4
			1-18913-5	77-23	2
			1-18913-6	77-24	2
			1-18915	182-9	36
				182-25	
				182-47	
			1-18935	7-14	1
			1-18936	43	8
			1-18941-12-6	39-45	2
				40-50	
			1-18941-13-7	43-5	4
				43-18	
			1-18941-7-5	40-23	1
			1-18941-9-5	39-50	1
			1-18947-11-9	40-22	1
			1-18947-15-1	39-49	1
			1-18947-20-0	39-29	2
				40-48	
			1-18971	39-39	4
				40-33	
			1-18977	186-1	3
				187-1	
			1-18979-8-2	39-44	1
			1-18979-9-1	39-48	1
			1-18979-9-4	40-21	1
			1-18982	164-23	4
			1-18984	43-8	4
				43-21	
			1-18984-1	43	4
			1-19001-13	136-26	1
			1-19001-49	73-14	2
			1-19005-7	122-12	2
			1-19034	20-17	11
				97-17	
			1-19052-6-6	95-11	1
			1-19054	143-54	1
			1-19055	143-53	1
			1-19060	164-15	4
			1-19069	164-18	4
			1-19070	186	1
			1-19076	183	2
			1-19076-1	183	2
			1-19076-4	183-6	2
			1-19076-5	183-8	2
			1-19083	152-15	1
			1-19087-4	152-10	1
			1-19655-1	140-53	2
				142-33	
			1-19658	80-11	1
			1-19661	80-10	1
			1-19701	142	1
			1-19701-1	142	2
				142-22	
			1-19701-2	142	1
			1-19701-3	142	1
			1-19701-5	142	1
			1-19706-3	177-16	2
			1-19707-4	177-13	2
			1-19817-2	23	1
			1-19817-3	23-6	1
			1-19823	110-2	2
				116-22	
			1-19844	164-10	4
			1-19857-1	164-11	1
			1-19857-2	164-17	2
			1-19857-3	164	1
			1-19857-4	164	2
			1-19951	111-43	1
			1-19995	164	2
			1-20016	24-9	10
				24-20	
				24-33	
			1-20021	181-5	20
			1-20038	143-55	1
			1-20040	143-56	1
			1-20065	151-19	4
			1-20071-1	23-15	2
			1-20072-2	23-32	2
			1-20135	161-26	24
				162-34	
			1-20199	39-55	4
				40-59	
				41-5	
				42-5	
			1-20200	39-54	4
				40-57	
				41-7	
				42-7	
			1-20201	39-56	8
				40-59	
				41-6	
				42-6	
			1-20348	66-10	1
			1-20354	64-9	8
				64-34	
				67-29	
			1-20365	81-8	4
			1-20367	81-6	2
			1-20380	182	64
			1-20380-1	182	4
			1-20380-2	182-39	64
			1-20380-3	182-2	4
			1-20382	73-23	1
			1-20382-1	73-24	1
			1-20386	176	80
				182	
			1-20387	181	92
				181-13	
				181-22	
				181-31	
				181-40	
				181-58	
			1-20521	73	NP
			1-20533	161-11	10
				162-13	
			1-20535-100	132-38	2
			1-20535-42	132-52	1
			1-20535-54	132-13	2
			1-20535-60	132-5	8
				132-18	
				132-26	
				132-35	
				132-47	
				132-59	
				132-70	
			1-20535-84	132	1
			1-20537-16	132-9	2
			1-20538-8	132-8	2
			1-20555	70	NP
			1-20555-1	70-65	1
			1-20732	161	NP
				162	
			1-20878	123-9	2
			1-20880	123-10	2
			1-21001	109	1
			1-21005	161-24	40
				162-32	
			1-21005-1	162-33	2
			1-21028	93-13	4

PUBLISHED BY AVIALOGS.COM

U. S. Army	U. S. Navy	British	Part Number	Figure & Index No.	Total Qty.
			1-21031	105-20	24
				161-28	
				162-35	
			1-21032	105-21	8
				161-27	
			1-21033	106-11	2
			1-21034	162-36	16
			1-21053	17-25	24
			1-21074	52-24	2
			1-21077	121	4
			1-21081-4	39	1
			1-21081-5	40-35	1
			1-21081-6	39-41	1
			1-21081-7	40	1
			1-21087	39-23	4
				40-46	
				41-28	
				42-25	
			1-21099	161-25	42
				162-31	
			1-21345-1	123-21	1
			1-21347	91-13	2
			1-21349	91	1
			1-21350	91-43	1
			1-21379	161-23	21
				162	
			1-21379-2	161	21
				162-30	
			1-21385	176-4	12
			1-21393	192-4	4
			1-21399	192-5	4
			1-21424	28-11	4
			1-21425	162	2
				162-16	
			1-21425-1	162	2
				162-17	
			1-21426	161-6	5
				162	
				162-6	
			1-21426-1	161	5
				162	
				162-7	
			1-21444	123-3	1
			1-21454-2	162-15	1
			1-21454-3	162	1
			1-21458-1	44-17	2
			1-21470	130	14
			1-21547	153-14	2
			1-21924-3-0218	182-8	72
				182-24	
				182-46	
			1-21924-4-0375	176	72
			1-21927	176-5	6
			1-21949-1	182-56	72
			1-21949-2	181-10	50
				181-19	
				181-28	
				181-37	
				181-46	
				181-55	
			1-21950	111	1
			1-21953	143-23	2
			1-21955	143-24	1
			1-21956	192-10	16
			1-21958	192-7	4
			1-21963-1	176-17	36
			1-21966	181-15	46
				181-24	
				181-33	
				181-42	
				181-51	
				181-60	
			1-21987	98	NP
			1-22603	78-9	1
			1-22607	152-5	1
			1-22609	149-3	2
			1-22610	149-4	2
			1-22613	149-5	2
			1-22621	149	4
			1-22622	149-1	1
			1-22622-1	149	1
			1-22651	143-10	2
			1-22655	28	4
			1-22655-1	38	4
			1-22655-2	138	1
			1-22684	67-15	2
			1-22694	70-10	1
			1-22707	147-10	1
			1-22707-18	147	1
			1-22707-28	150-30	1
			1-22746	110-6	7
				110-23	
				111-2	
				111-7	
				111-8	
				111-56	
			1-22746-1	109-29	6
				110	
				111-9	
				116-5	
				117-6	
			1-22888-1	158-29	1
			1-22900-10	56-13	2
			1-22928-5	103-2	2
			1-22934-5	166-23	8
			1-22959-2	103-24	2
			1-22986-3	163-22	2
			1-22987-1	159-23	1
			1-23035-2	14-30	2
			1-23503-152	128	1
			1-23504	169-21	As Req.
			1-23504-1	169	As Req.
			1-23504-2	169	As Req.
			1-23504-3	169	As Req.
			1-23548	128-13	1
			1-23550	128-12	2
			1-23553	127	NP
			1-23570	161-12	2
			1-23570-1	161	1
			1-23582	98	3
				98-13	
			1-23584	98-8	1
			1-23592	112	8
			1-24204-1	79	1
			1-24206	151-40	1
			1-24217	106-8	4
			1-24222-28	23-20	2
			1-24222-30	190	1
			1-24222-35	30-8	4
			1-24228-2	82-40	2
			1-24234-1	103-42	1
			1-24234-2	101-40	3
			1-24235-1	101-15	2
			1-24237-1	101-27	2
			1-24238-1	101-28	2
			1-24239-1	102-11	7
			1-24239-2	102-21	6
			1-24239-3	101-11	12
			1-24247-1	163-61	8
			1-24262	65-48	2
			1-24263	79-11	3
				108-42	
			1-24265	65-52	1
			1-2438-1-1D1	125-26	1
			1-24613-4	77-22	4
			1-24927	111-5	1
			1-24939	30-4	4
			1-24941-1	163-56	4
			1-24977	82-5	2
			1-24981	82-6	2
			1-25426	157-15	2
			1-25427	157-17	2
			1-25428	157-22	1
			1-25429	157-7	2
				157-11	
			1-25430-1	157-24	1
			1-25433	157-4	2

PUBLISHED BY AVIALOGS.COM

U. S. Army	U. S. Navy	British	Part Number	Figure & Index No.	Total Qty.
			1-25463	157-19	1
			1-25464	157-16	1
			1-25489	157-23	2
			1-25503	127-54	3
				127-58	
				127-60	
			1-25564	36-17	2
			1-25565	36	4
			1-25567-1	155-37	1
			1-25568-1	155-36	1
			1-25571	36-27	4
			1-25571-1	36	4
			1-25592	90-11	1
			1-25593	90-10	1
			1-25596	128	1
			1-25597	63-4	2
			1-25720	157-9	2
			1-25940	157-18	2
			1-26276-1	82-38	2
			1-2639-3-8CUI	125-35	1
			1-26402	128	2
			1-26403-2	152-7	1
			1-26415	91-8	8
			1-26432	162-37	2
			1-26434-1	76-24	60
				76-42	
			1-26471	80-38	1
			1-26476	160-12	2
			1-26477	160-2	1
			1-26477-1	160-3	1
			1-26478	160-4	1
			1-26478-1	160-5	1
			1-26887	83-29	1
			1-26889	83-32	6
			1-27173	24-7	8
			1-27173-1	24	8
			1-27185	147-40	1
			1-27200	36-22	2
			1-27216	21-62	2
			1-27378	76-31	8
				76-48	
			1-27385	123-23	1
			1-27399	151-12	1
			1-27602	151-14	1
			1-27603	151-13	1
			1-27613	136-13	2
			1-27630	83-31	2
			1-27639	78-11	1
			1-27639-1	78-23	1
			1-27706	147-71	1
			1-27724	166-17	2
			1-27726	147-69	1
			1-27728	167-48	2
			1-27733	21-36	2
			1-27733-2	21-54	2
			1-27735	170-16	2
			1-27741	92-38	4
			1-27743	106	2
			1-27745	147	1
			1-27746	158-20	1
			1-27901	19-34	24
				20-27	
				97-3	
			1-27906	158-16	1
			1-27918-1	158-12	4
			1-27927	158-4	2
			1-27928-1	158-13	2
			1-27931	158-28	1
			1-27931-1	158-25	1
			1-27932	158-7	2
			1-27935	121	2
			1-27935-1	146-44	4
			1-27935-2	121	4
			1-27936	181	8
			1-27939	153-8	1
			1-27942	153	1
			1-27943	153-12	1
			1-27945	153-27	1
			1-27945-1	153-29	1
			1-27946	153-25	1
			1-28072	149-15	2
			1-28072-1	147-8	1
			1-28115	170-9	2
			1-28185	158	4
			1-28200	158-6	1
			1-28204	158-23	1
			1-28304	58-13	1
			1-28306	153-33	1
			1-28368	147-13	1
			1-28392	106	1
			1-28758-1	183-7	19
				183-9	
				183-11	
				183-13	
				183-15	
				183-17	
				183-19	
				183-21	
				184	
			1-28781	65-35	2
			1-28799	128	1
			1-28841	77-3	16
			1-28845	163-69	As Req.
			1-28859	158-30	1
			1-28972	21-43	8
			1-28977-1	80-25	1
			1-28979-1	80-24	3
			1-28999	78-54	1
			1-29092	121-1	2
			1-29182	21-10	4
			1-29212	44-30	1
			1-29232	82-37	2
			1-29236	117-2	1
			1-29238	117-3	1
			1-29254	110	2
				116	
			1-29304	109	1
			1-29322	57-25	2
			1-29325	117	1
			1-29329-1	53-67	4
			1-29337	57-20	2
			1-29338	57-21	2
			1-29348	53-71	2
			1-29690	80-13	1
			1-29694	90-13	1
			1-29922	136	8
				143	
			1-29960	147-7	2
			1-29962	170-2	4
			1-29992	128	2
			1-30175	127-9	1
			1-30187	71	2
			1-30200	19	1
			1-30217	45-16	2
			1-30401	163-28	1
			1-30403	149	6
				151-26	
			1-30403-1	146-25	2
			1-30403-2	150-25	2
			1-30418	79-23	6
			1-30418-1	79-24	5
			1-30453-1	119-17	1
			1-30472	175-14	1
			1-30479	175-12	1
			1-30623	158-8	2
			1-30665	166-5	2
			1-4795	184-8	2
				185-10	
			1-534-43D1	125-34	1
			1-8579	140-54	1
			1-9034	19-25	1
			1E757	35-14	4
				35-19	
			1P677	126	1
			10-1336-26SS10	125-18	1
			10-1342-4SS10	55-4	1
			10-1342-5SS10	55-6	1

PUBLISHED BY AVIALOGS.COM

U. S. Army	U. S. Navy	British	Part Number	Figure & Index No.	Total Qty.
			10-1342-6SS10	55-9	1
			10-1442-3D1	55-12	1
			10-1542-21D3	55-2	1
			10-1641-55D5	125-14	1
			10-1842-5SS10	55-8	1
			10-2142	83-3	1
			10-2142-15	54-11	1
				55-1	
				203-3	
			10G116	82-54	2
			10061-1E	109-27	1
			103611-970-2	39-19	4
				40-42	
				41-23	
				42-21	
			1054	82-50	2
			106-8	121-63	3
				121-81	
			1071535	85	2
			1073-1	45	2
			1073-1A	113-2	1
				154-44	
			1073-1B	113	1
				154	
			1073-2	45	1
			1073-3	45-12	1
			109GGR	113-17	2
				118-6	
			109S	108-25	1
			109SA	118-7	1
			109SR	118-8	1
			11-1140-20SS10	137-3	1
			11-1237-6SS2	137	1
			11-1638-11-4D3	137-2	1
			11-642-85	137	1
			1103	91-6	1
			1110	116	68
			1125	66	1
			114	67-18	2
			117	154-16	2
			11749	47	3
				47-20	
			11751	47	3
				47-21	
			12-1148	53-50	NP
				57	
			12-1148-1	57-26	1
			12-1148-6	57-27	1
			12-1148-13	57-28	1
			12-1149	53-53	NP
				57	
			12-1149-1	57-44	1
			12-1149-7	57-43	1
			12-1198	79	NP
			12-1198-1	79-33	1
				150	
			12-1199	79	NP
			12-1199-1	79-32	1
				150-42	
			12-1241-13-16SS9	55-5	1
			12-638-2B18	137-6	1
			12-825	79	NP
			12-825-11	79	1
			12-839	66	NP
			12-839-17	66	1
			12-839-2	66	1
			12-839-23	66	1
			12-839-3	66-1	1
			12-839-4	66-3	1
			12-839-5	66-2	1
			12-842	68	1
			12-848	71	NP
			12-848-9	71-4	NP
			12001-0	108-11	1
			12002-1	44-32	1
			12003-1	108-46	1
			1203	7-13	1
			1206	169-30	2
			1227-1A	115-7	1
			1248	82-52	2
			1264	82-51	2
			132	79	4
			13960-3	23-3	4
				198-2	
			14-10407-53	21	1
			14-1337-4	12-5	2
			14-1681	91	NP
			14-1681-1	91	NP
			14-1681-2	91-44	1
			14-1681-3	91-45	1
			14-1692-1	69-37	1
			14-1692-12	69-38	1
			14-1692-13	69-39	1
			14-1692-4	69-36	2
			14-1692-7	69-49	1
			14-1692-8	69-50	1
			14-1692-9	69	NP
			14-1695	82	NP
			14-1695-1	82	NP
			14-1695-4	82-1	1
			14-1695-41	82	1
			14-1695-42	82	1
			14-1695-5	82	1
			14-1820	177	NP
				184	
				185	
			14-1820-15	184	1
			14-1820-7	184	1
			14-1820-8	184-1	1
			14-1945	44-11	NP
				47	
			14-1945-1	44	NP
				47	
			14-1945-15	47-16	1
			14-1945-25	47	1
			14-1945-26	47	1
			14-1945-28	47-13	1
			14-1945-30	47-12	1
			14-1945-32	47-14	1
			14-1945-34	47-17	1
			14-1945-36	47-19	1
			14-1945-38	47-18	1
			14-1945-40	47-5	4
			14-1945-48	47	1
			14-1945-50	47	1
			14-1945-58	47	1
			14-1945-6	47-15	1
			14-1945-60	47	1
			14-1945-62	47	1
			14-2043	59-27	1
			14-2045	12	NP
			14-2045-1	12	NP
			14-2051	59	NP
			14-2052	59	NP
			14-2053	5	NP
			14-2053-1	5	NP
			14-2056	143	NP
			14-2056-14	143-58	1
			14-2056-20	143-60	1
			14-2056-21	143-57	1
			14-2056-23	143-59	1
			14-2072	113	NP
			14-2072-1	113	NP
			14-2072-10	113	1
			14-2072-11	113	1
			14-2072-12	113	1
			14-2072-13	113	1
			14-2072-19	113	1
			14-2073	59-15	1
			14-2073-1	59	1
			14-2357	161-22	1
			14-2357-2	161	1
			14-2357-8	162-29	1
			14-2357-9	162	1
			14-2870-13	111-29	1
			14-2870-21	111	1
			14-2878	121	1

PUBLISHED BY AVIALOGS.COM

U. S. Army	U. S. Navy	British	Part Number	Figure & Index No.	Total Qty.
			14-3002	100	NP
				108-29	
			14-3004	114	NP
			14-3006	98	NP
			14-3006-2	98	1
			14-3006-3	98	1
			14-3006-6	98	1
			14-3006-7	98	1
			14-3281	111-3	NP
				112	
			14-3281-11	112	1
			14-3281-13	112	1
			14-3281-16	112	1
			14-3281-8	112	1
			14-3281-9	112-13	1
			14-3286	147-1	1
			14-3286-35	147-9	1
			14-3287	167-21	1
			14-3287-1	167	1
			14-3287-2	167-39	2
			14-3288	141-83	1
			14-3288-1	141-84	1
			14-3289	141-85	1
			14-3289-1	141-86	1
			14-3290	147	NP
			14-3311	83	NP
			14-3316	81	1
			14-3569	177-23	NP
				184	
				185	
			14-3569-1	185	1
			14-3569-2	185	1
			14-3610	64-31	1
			14-3626	83-1	1
			14-3630	142	NP
			14-3630-1	142	1
			14-3630-4	142-1	1
			14-3631	142	NP
			14-3638	59	1
			14-3638-1	59	1
			14-3655	141	NP
			14-3670	9-18	1
			14-3671	130	NP
			14-3674-15	53-73	1
			14-3674-16	53-74	1
			14-3694	141-50	1
			14-3695	141-27	2
				141-40	
			14-3704	43	NP
			14-3704-1	43	1
			14-3704-2	43	1
			14-3706	43	NP
			14-3706-1	43	1
			14-3706-2	43	1
			14-3740	116-18	1
			14-4065	111-72	NP
				118	
			14-4065-1	118	1
			14-4065-3	118	1
			14-4099	111-73	NP
				118	
			14-7337-44	83	1
			1400B5-1	26-19	4
				27-27	
			1485	82-52	2
			15-10001	65-46	1
			15-10390	21-67	NP
				24	
			15-10390-1	24	NP
			15-10390-2	24-14	1
			15-10390-3	24	1
			15-10391	24	1
			15-10391-1	24	1
			15-10392	24	1
			15-10392-1	24	1
			15-10393	24	1
			15-10393-1	24	1
			15-10394	24	1
			15-10394-1	24	1
			15-10395	24	1
			15-10395-1	24	1
			15-10396	24	1
			15-10396-1	24	1
			15-10398	24	1
			15-10398-1	24	1
			15-10399	24	1
			15-10399-1	24	1
			15-10400	21-68	NP
				24	
			15-10400-1	24	NP
			15-10400-2	24-25	1
			15-10400-3	24	1
			15-10404	132	NP
			15-10404-1	132	1
			15-10404-4	132-31	1
			15-10407	21	NP
				22	
			15-10407-1	21	NP
				22	
			15-10407-11	21-13	2
			15-10407-118	22-5	2
			15-10407-119	22-6	2
			15-10407-12	21-16	2
			15-10407-121	22-11	1
			15-10407-123	22-7	1
			15-10407-125	22	1
			15-10407-126	22-12	1
			15-10407-127	22	1
			15-10407-128	22-8	1
			15-10407-13	21-17	2
			15-10407-130	22-39	1
			15-10407-131	22	1
			15-10407-132	22-40	1
			15-10407-133	22-41	1
			15-10407-134	22-42	1
			15-10407-135	22	1
			15-10407-136	22-43	1
			15-10407-137	22	1
			15-10407-138	22-44	1
			15-10407-139	22	1
			15-10407-14	21-18	2
			15-10407-140	22-34	1
			15-10407-141	22-35	1
			15-10407-142	22-36	1
			15-10407-143	22	1
			15-10407-144	22-37	1
			15-10407-145	22	1
			15-10407-146	22-50	2
			15-10407-147	22	2
			15-10407-149	22-51	1
			15-10407-15	21-19	1
			15-10407-150	22	1
			15-10407-151	22-49	1
			15-10407-152	22-48	1
			15-10407-153	22	1
			15-10407-156	22-30	1
			15-10407-157	22-19	1
			15-10407-158	22-31	1
			15-10407-159	22-24	1
			15-10407-16	21	1
			15-10407-18	21-37	2
				22-15	
			15-10407-19	21-39	3
				22-16	
			15-10407-20	21-40	3
				22-17	
			15-10407-21	21-41	3
				22-18	
			15-10407-22	21-42	2
			15-10407-23	21-56	3
				22-27	
			15-10407-24	21-57	3
				22-28	
			15-10407-25	21-58	3
				22-29	
			15-10407-26	21-59	2
			15-10407-27	21-61	3
				22-46	

PUBLISHED BY AVIALOGS.COM

U. S. Army	U. S. Navy	British	Part Number	Figure & Index No.	Total Qty.
			15-10407-3	21-11	2
			15-10407-34	21-34	1
			15-10407-35	21	1
			15-10407-4	21-14	4
				21-27	
			15-10407-45	21	1
			15-10407-46	21-30	2
			15-10407-5	21-28	2
			15-10407-50	21-12	2
			15-10407-52	21-35	1
			15-10407-54	21-20	1
			15-10407-55	21	1
			15-10407-6	21-31	1
			15-10407-62	21-47	4
			15-10407-63	21-48	4
			15-10407-7	21-32	2
			15-10407-73	21-2	2
			15-10407-74	21-3	3
				22-3	
			15-10407-75	21-5	2
			15-10407-76	21-7	2
			15-10407-77	21-8	2
			15-10407-78	21-22	2
			15-10407-79	21-24	1
			15-10407-8	21-33	1
			15-10407-80	21-25	2
			15-10407-81	21-4	3
				22-4	
			15-10407-83	21	1
			15-10407-87	21-63	1
			15-10407-88	21	1
			15-10407-89	21-64	1
			15-10407-9	21	1
			15-10407-90	21	1
			15-10407-94	21-52	4
			15-10407-95	22-2	1
			15-10407-96	21	4
			15-10408	21-69	NP
				23	
				24	
				25	
			15-10408-1	24	NP
			15-10408-2	24-41	1
			15-10408-3	24-40	1
			15-10408-6	24	2
			15-10408-8	23	1
			15-10409	147-35	1
			15-10411	147	NP
			15-10411-4	147-73	1
			15-10412	147-22	1
			15-10412-2	147	1
			15-10412-3	147	1
			15-10414	166	NP
				199-13	
			15-10414-12	166-9	1
			15-10414-13	166	1
			15-10414-14	166	2
			15-10414-24	166-10	1
			15-10414-25	166	1
			15-10414-26	166-11	2
				170	
			15-10414-27	166	1
			15-10414-28	166	1
			15-10414-5	166-6	1
				167-1	
			15-10414-6	166	1
				167	
			15-10422	152	NP
			15-10429	44	NP
				108	
			15-10430	5	NP
			15-10430-1	5	NP
			15-10430-2	5-3	1
			15-10430-3	5	1
			15-10431	79	NP
			15-10431-1	79-4	1
			15-10438	44	NP
			15-10439	12	NP
			15-10605	149-14	1
			15-10605-1	149	1
			15-10606	149	NP
			15-10621	130	NP
			15-10621-1	130-48	1
			15-10622	130	NP
			15-10626	159	NP
			15-10626-1	159-1	1
				153-1	
			15-10626-2	153	1
			15-10959	158-2	1
			15-10960	71	NP
			15-10960-1	71	1
				87-2	
			15-10967	66-45	1
				158-1	
				159-29	
			15-10973	71	NP
			15-10973-1	71	1
				87-3	
			15-10983	58	NP
			15-10990	66	NP
			15-10991-3	108-3	1
			15-10991-5	108	1
			15-11151	153-6	1
			15-11162	87	NP
				195	
			15-11177	43	NP
				119	
			15-11178	68-3	1
			15-11194	159	NP
			15-11194-1	159-20	1
			15-11194-13	159-25	1
			15-11194-19	159-19	1
			15-11194-9	159-24	1
			15-11308	172	NP
			15-11382	145	NP
			15-11383	17-28	2
			15-11406	64	1
			15-11406-1	64	1
			15-11406-10	64-28	1
			15-11406-11	64-29	1
			15-11406-12	64-46	1
			15-11406-14	64	1
			15-11406-15	64-38	1
			15-11406-18	64-37	2
				64-39	
			15-11406-19	64-50	1
			15-11406-27	64-45	1
			15-11406-28	64	1
			15-11406-29	64-26	1
			15-11406-30	64-51	1
			15-11406-31	64	1
			15-11406-33	64	1
			15-11406-6	64-35	1
			15-11406-8	64-27	1
			15-11406-9	64-30	1
			15-11412	142	NP
			15-11412-1	142-7	1
			15-11412-6	142-6	1
			15-11421	121	NP
			15-11421-1	121-7	1
			15-11421-2	121-4	1
			15-11421-3	121-3	1
			15-11421-4	121-6	1
			15-11421-5	121-2	1
			15-11421-6	121-5	1
			15-11604	43	NP
			15-11604-1	43	NP
			15-11604-2	43-14	2
			15-11618	43	NP
			15-11618-1	43	2
			15-11618-2	43	2
			15-11618-3	43	2
			15-11619	43	NP
			15-11619-1	43	NP
			15-11622	68	NP

PUBLISHED BY AVIALOGS.COM

U. S. Army	U. S. Navy	British	Part Number	Figure & Index No.	Total Qty.
			15-11622-1	68-2	1
				159-33	
			15-11622-2	68-4	1
				159-34	
			15-11632	66-39	1
			15-11633	66	NP
			15-11633-1	66	1
				159-27	
			15-11634	68-12	1
			15-11639	77	NP
			15-11640-2	77-36	1
			15-11641	68	NP
			15-11641-1	68-11	1
				159-35	
			15-11641-2	68-13	1
				159-36	
			15-11641-3	68-15	1
				159-37	
			15-11641-4	68-17	1
				159-38	
			15-11641-5	68-19	1
				159-39	
			15-11644-2	77	1
			15-11645	77	NP
			15-11656	68-20	1
			15-11662	43	NP
			15-11662-3	43	2
			15-11662-4	43	2
			15-11662-5	43	2
			15-11662-6	43	NP
			15-11667	43	NP
			15-11667-1	43	1
			15-11671	43	NP
			15-11671-1	43	1
			15-11676	119	NP
			15-11683	111	NP
			15-11684	111	1
			15-11684-1	111	1
			15-11684-23	111	1
			15-11684-25	111	1
			15-11684-31	111	1
			15-11684-32	111	1
			15-11692	23	NP
				26-50	
				28	
				199	
			15-11692-1	23	1
			15-11692-2	28	1
			15-11692-3	23-33	1
			15-11692-6	23	1
			15-11692-7	28	1
			15-11692-9	23	1
			15-11693	23	NP
				26-52	
				28	
				191	
			15-11693-1	23	1
			15-11693-2	28	1
			15-11693-3	23-34	1
			15-11693-6	23	1
			15-11693-8	28	1
			15-11694	23	NP
				27-49	
				28	
				199	
			15-11694-1	23	1
			15-11694-10	28	1
			15-11694-12	23	1
			15-11694-2	28	1
			15-11694-3	23	1
			15-11694-9	23	1
			15-11695	23	NP
				27-51	
				28	
				191	
			15-11695-1	23	1
			15-11695-10	23	1
			15-11695-2	28	1
			15-11695-3	23	1
			15-11695-7	23	1
			15-11695-8	28	1
			15-11900	79	NP
			15-11912	79	NP
			15-11920-4	68-25	1
			15-11920-5	68	1
			15-11921	68	NP
			15-11921-1	68	NP
			15-11921-2	68-23	1
				88-2	
				89-9	
			15-11921-3	68-24	1
				88-3	
				89-10	
			15-11924	163	NP
			15-11925	163	NP
			15-11926-8	163-67	1
			15-11927-7	163-68	1
			15-11929	73-21	1
			15-11929-1	73-22	1
			15-12710	53	NP
			15-12710-1	53-14	1
			15-12710-10	53-15	1
			15-12710-8	53-16	1
			15-12711	53	NP
				141	
			15-12712	141	NP
			15-12723	53	NP
				140	
				141	
			15-12754	53	NP
			15-12754-1	53	NP
			15-12756	53	NP
			15-12756-1	53	NP
			15-12763	53	NP
			15-12763-3	53-28	1
			15-12765	53	NP
			15-12765-1	53	NP
			15-12765-2	53	1
			15-12765-3	53	1
			15-12774	140	NP
			15-12775	66-41	1
			15-12775-1	66-42	1
			15-12779	140	NP
			15-12779-2	140-26	1
			15-12782	140	NP
			15-12784	66	NP
			15-12784-1	66	1
				89-13	
			15-12784-2	66	1
				89-14	
			15-12784-3	66	2
				89-15	
			15-12784-4	66	2
				89-16	
			15-12790	53	NP
			15-12921	67	1
			15-12921-1	67	1
			15-12921-12	67-4	1
			15-12921-15	67	1
			15-12921-20	67	1
			15-12921-4	67-5	1
			15-12921-7	67	2
			15-12943	26-6	NP
				30	
			15-12944	26-7	NP
				30	
			15-12945	27-7	NP
				30	
			15-12946	27-8	NP
				30	
			15-12946-4	30	1
			15-12947	140	NP
			15-12952	53	NP
			15-12952-1	53	NP
			15-12964	56-1	1
			15-12964-1	56	1

PUBLISHED BY AVIALOGS.COM

U. S. Army	U. S. Navy	British	Part Number	Figure & Index No.	Total Qty.
			15-12965	9-9	NP
				56	
				202-5	
			15-12965-1	9	NP
				56	
			15-12965-2	56	1
				63	
			15-12965-3	56	1
				57-64	
			15-12971	140	NP
			15-12972	140	NP
			15-12972-4	140-1	1
			15-12972-8	140	NP
			15-12972-9	140	1
			15-12978-17	53-75	1
			15-12978-18	53-76	1
			15-12987	53	NP
			15-12995	53	NP
			15-12995-1	53	NP
			15-13012	69-5	NP
				144	
			15-13012-2	144	1
			15-13013	57-68	NP
				69-6	
				144	
				202-4	
			15-13013-1	144-9	1
			15-13013-2	144	1
			15-13013-3	144	1
			15-13018	53	NP
			15-13031-17	53-69	2
			15-13031-22	53-66	1
			15-13031-23	53	1
			15-13031-31	53	1
			15-13031-32	53	1
			15-13031-36	53	1
			15-13031-37	53	1
			15-13031-40	53	1
			15-13031-41	53	1
			15-13037	53	NP
				57	
			15-13037-1	57-1	1
			15-13037-3	57-3	1
			15-13037-5	57-2	1
			15-13037-7	57-4	1
			15-13043	79	NP
			15-13048	24	1
			15-13048-1	24	1
			15-13049	24	1
			15-13049-1	24	1
			15-13050	24	1
			15-13050-1	24	1
			15-13053	121	NP
			15-13053-1	121	1
			15-13053-2	121	1
			15-13053-3	121	1
			15-13053-4	121-62	1
			15-13083	141	NP
			15-13083-2	141-35	1
			15-13085	150-23	1
			15-13091	154-25	NP
				157	
			15-13091-1	157-1	1
			15-13091-4	157	1
			15-13096	132	NP
			15-13096-1	132	NP
			15-13096-13	132	2
				133	
			15-13096-14	132	2
				133	
			15-13096-6	132	2
				133-52	
			15-13098	149	1
			15-13098-1	149	1
			15-13138-15	53-17	2
			15-13208	141	NP
			15-13217	127	NP
			15-13217-10	127-29	1
			15-13217-11	127-30	1
			15-13217-9	127-28	1
			15-13245	131	1
			15-13245-1	131-35	1
			15-13247	150	NP
			15-13248	150	NP
			15-13264	150-24	1
			15-13288	81-1	1
			15-13296	45	NP
			15-13296-1	45	2
			15-13296-2	45	2
			15-13703	44	NP
			15-13703-1	44	NP
			15-13711	24	1
			15-13711-1	24	1
			15-13712	24	1
			15-13712-1	24	1
			15-13713	24	1
			15-13713-1	24	1
			15-13714	24	1
			15-13714-1	24	1
			15-13715	24	1
			15-13715-1	24	1
			15-13716	24	1
			15-13716-1	24	1
			15-13717	24	1
			15-13717-1	24	1
			15-13718	24	1
			15-13719	24	1
			15-13719-1	24	1
			15-13819	65	NP
			15-13819-4	65	1
			15-13819-5	65-11	1
			15-13819-6	65-12	1
			15-13839-7	65-18	1
			15-13843	65	NP
			15-13843-10	65-23	1
			15-13843-11	65-24	1
			15-13843-12	65-30	1
			15-13843-9	65	1
			15-13853	146-24	2
			15-13854	146	NP
			15-13856	140	NP
			15-13867	29	NP
			15-13867-1	29	NP
			15-13867-2	29	NP
			15-13867-3	29	NP
			15-13867-4	29	NP
			15-13867-5	29	NP
			15-13867-6	29	NP
			15-13867-7	29	NP
			15-13869	146	NP
			15-13869-1	146	1
			15-13869-10	146	1
			15-13869-11	146	1
			15-13869-2	146	1
			15-13869-5	146	1
			15-13869-7	146	2
			15-13870	146	NP
			15-13871	110	NP
			15-13871-1	110	1
			15-13871-3	110	1
			15-13871-6	110	1
			15-13874	108	NP
			15-13874-2	108	1
			15-13874-3	108	1
			15-13874-6	108	1
			15-13876	132	NP
				133	
			15-13876-1	132	2
				133	

PUBLISHED BY AVIALOGS.COM

U. S. Army	U. S. Navy	British	Part Number	Figure & Index No.	Total Qty.
			15-13876-10	132	2
				133	
			15-13876-12	132	2
				133	
			15-13876-13	132	2
				133	
			15-13878	146	NP
			15-13885	166	NP
			15-13885-1	166-44	2
			15-13954	150	NP
			15-13958	150-12	4
			15-14623	135	NP
			15-14623-1	135-48	1
			15-14655	135	NP
			15-14655-1	135-63	1
			15-14655-2	135-66	1
			15-14655-3	135-65	1
			15-14655-4	135-62	1
			15-14655-5	135-64	1
			15-14655-6	135-59	2
			15-14787	26	1
			15-14787-1	26	1
			15-14787-4	26	1
			15-14787-5	26	1
			15-14788	26	1
			15-14788-1	26	1
			15-14788-4	26	1
			15-14788-5	26	1
			15-14789	27	1
			15-14789-1	27	1
			15-14789-4	27	1
			15-14789-5	27	1
			15-14790	27	1
			15-14790-1	27	1
			15-14790-4	27	1
			15-14790-5	27	1
			15-15392	79	NP
			15-15396	79	NP
			15-15398	83	NP
			15-15486	147-44	1
			15-15489	82	NP
			15-16026	53-64	1
			15-16026-1	53-65	1
			15-16026-2	53	1
			15-16026-3	53	1
			15-16028	147	NP
			15-16076	147	NP
			15-16077	16-13	1
			15-16077-1	16	1
			15-16139	133	NP
			15-16139-1	133-25	1
			15-16139-7	133	1
			15-16167	130-52	1
			15-16174	130-10	1
			15-16176	130	NP
			15-16185	141	NP
			15-16185-1	141-18	1
			15-16185-11	141-17	1
			15-16185-2	141-20	1
			15-16185-7	141-22	1
			15-16187	130	NP
			15-16187-1	130	1
			15-16196	67-10	1
			15-16196-1	67	1
			15-16593	134	NP
			15-16593-1	134	1
			15-16593-2	134	1
			15-16593-3	134	1
			15-17001	163-70	2
			15-17028	163	NP
			15-17035	163	NP
			15-17138	141-49	1
			15-17138-1	141-39	1
			15-17138-10	141-53	13
				141-57	
				141-59	
			15-17138-11	53-24	3
				140-61	
			15-17138-12	141-13	4
				141-28	
			15-17138-13	53-29	2
			15-17138-14	140-27	15
				140-44	
				140-56	
				140-58	
				140-77	
				141-41	
				141-44	
			15-17138-15	53-5	15
				53-19	
				140-75	
				140-79	
				141-9	
				141-11	
			15-17138-16	53-2	3
			15-17138-2	140-34	5
				141-36	
				141-46	
			15-17138-3	141-69	8
			15-17138-4	53-10	3
				140-66	
			15-17138-5	140-64	1
			15-17138-6	141-30	3
			15-17138-7	140-13	4
				140-15	
				140-41	
				141-51	
			15-17138-8	53-8	9
				140-17	
				141-1	
				141-3	
			15-17138-9	140-20	2
			15-17162	118	NP
			15-17162-1	118-22	1
			15-17162-2	118	2
			15-17162-3	118	2
			15-17533-12	134	2
			15-17533-6	134-18	2
			15-17533-7	134-19	2
			15-18502	177	1
			15-18502-1	177	1
			15-18502-4	177	1
			15-18502-5	177	1
			15-18502-6	177	1
			15-18736	150	NP
			15-3097	24	1
			15-3097-1	24	1
			15-4779	167	2
			15-4779-1	167-19	2
			15-4779-2	167-18	4
			15-5008	161-14	58
				162-21	
			15-5665	15	NP
			15-5665-1	15	NP
			15-5665-2	15-4	2
			15-6045-28	16-7	1
			15-6045-29	16	1
			15-6045-62	16	NP
			15-6045-63	16	NP
			15-6063-30	16-2	2
			15-6063-31	16	1
			15-6079	36-3	2
			15-6146	120	NP
			15-6146-1	120	1
			15-6146-14	120-13	1
			15-6146-15	120-6	2
				120-7	
			15-6146-16	120	1
			15-6146-17	120	1
			15-6146-18	120-10	1
			15-6146-19	120	1
			15-6146-2	120-8	1
			15-6146-3	120-9	1
			15-6146-4	120-5	1
			15-6181	167-43	2
			15-6181-1	167	1

PUBLISHED BY AVIALOGS.COM

U. S. Army	U. S. Navy	British	Part Number	Figure & Index No.	Total Qty.
			15-6246	179	NP
				180	
			15-6333	9	NP
			15-6333-1	9	NP
			15-6333-31	9-20	1
			15-6333-32	9-1	1
			15-6343	9-6	NP
				37	
			15-6343-1	9	NP
				37	
			15-6345	45	NP
				169-61	
			15-6345-1	45	NP
				169	
			15-6531	34	NP
			15-6531-1	34	NP
			15-6531-2	34-37	1
			15-6531-3	34-38	1
			15-6534	16-24	NP
			15-6534-1	16	NP
			15-6534-2	16-25	1
			15-6534-3	16	1
			15-6535	16-18	NP
			15-6535-1	16	NP
			15-6535-2	16-19	1
			15-6535-3	16	1
			15-6620-103	76-52	1
			15-6620-104	76	1
			15-6620-105	76	1
			15-6620-12	76-17	2
				76-36	
			15-6620-2	76-26	2
				76-43	
			15-6620-3	76-16	1
			15-6620-61	76	NP
			15-6620-62	76	1
			15-6620-66	76-21	1
			15-6620-67	76-18	2
				76-37	
			15-6620-79	76-20	1
			15-6620-88	76	1
			15-6620-89	76-51	1
			15-6620-90	76-53	1
			15-6620-91	76-54	1
			15-6620-94	76-63	1
			15-6620-95	76-55	1
			15-6620-97	76	1
			15-6621	76	NP
			15-6621-1	76-3	1
			15-6623	9-15	NP
				31-25	
				38	
			15-6623-1	9	NP
				32-24	
				38	
			15-6623-22	38-16	2
			15-6624	183	NP
			15-6624-1	183-4	2
			15-6625	183	NP
			15-6625-1	183	NP
			15-6625-2	183-3	1
			15-6625-3	183	1
			15-6701	33-3	1
			15-6701-20	33	1
			15-6702	143-63	1
			15-6703	143	1
			15-6703-1	143-25	1
			15-6703-10	143-26	1
			15-7015	69	1
				70	
			15-7017-31	75	1
			15-7020	75	1
			15-7023-103	58-4	1
				59	
			15-7023-104	59	1
			15-7023-31	59	1
			15-7024-53	58-23	1
				59	
				60	
			15-7025	58-1	1
				59	
			15-7025-1	58	1
				59	
			15-7025-134	58	1
				59	
			15-7025-140	58	1
				59	
			15-7025-141	59	2
			15-7025-142	59	2
			15-7025-2	59	2
			15-7025-4	59	2
			15-7025-6	59	2
			15-7026-39	58-9	1
				59	
			15-7026-40	58	1
				59	
			15-7026-43	58	1
				59	
			15-7026-44	58	1
				59	
			15-7029-11	24	2
			15-7029-16	24	1
			15-7029-18	24	1
			15-7029-2	23-38	1
			15-7029-8	24-38	2
			15-7029-9	24-43	2
			15-7033	95	NP
			15-7035	99	NP
				186	
				187	
			15-7036	99	NP
				186	
				187	
			15-7037	99	NP
			15-7038	37	NP
				197	
			15-7040	99	NP
			15-7042-2	59-31	1
			15-7042-3	59-36	1
			15-7042-31	59	NP
			15-7042-32	59	1
			15-7042-4	59-37	1
			15-7042-5	59-38	1
			15-7044	77	NP
			15-7044-1	77	NP
			15-7044-15	77	1
			15-7044-16	77	1
			15-7044-17	77-34	2
			15-7044-8	77-33	1
			15-7044-9	77	1
			15-7310	29-2	1
			15-7310-11	29	1
			15-7324-2	58	NP
				59	
			15-7336-1	106-21	2
			15-7336-10	106-22	2
			15-7336-11	106	2
			15-7337	83	NP
			15-7337-31	83-26	1
			15-7337-42	83	1
			15-7337-43	83	1
			15-7348-1	23-31	2
			15-7348-10	188-1	1
			15-7348-11	188	1
			15-7348-112	105-11	1
			15-7348-114	23-26	2
			15-7348-115	23-25	2
			15-7348-116	189	1
			15-7348-117	23-14	1
			15-7348-118	189-7	1
			15-7348-119	23	1
			15-7348-12	189-1	1
			15-7348-122	23-29	2
				105-17	
			15-7348-124	23-30	2
			15-7348-125	23-28	2

PUBLISHED BY AVIALOGS.COM

U. S. Army	U. S. Navy	British	Part Number	Figure & Index No.	Total Qty.
			15-7348-13	189	1
			15-7348-14	188-2	4
				189-2	
			15-7348-28	188-3	1
			15-7348-3	23-16	2
				105-16	
			15-7348-38	188	1
			15-7348-39	188-4	2
			15-7348-4	105-12	1
			15-7348-47	189-4	1
			15-7348-5	105-13	1
			15-7348-60	189	1
			15-7348-66	188-6	1
			15-7348-67	188-5	1
			15-7348-72	188	1
			15-7348-77	189-5	1
			15-7348-82	189	1
			15-7348-83	189	1
			15-7348-84	188-9	3
				189-10	
			15-7348-85	188-11	3
				189-12	
			15-7348-89	188-7	2
			15-7348-90	188-8	2
			15-7348-91	189-8	1
			15-7348-92	189-9	1
			15-7348-93	189	1
			15-7360-1	81	1
			15-7360-11	81-25	1
			15-7360-83	81	1
				151	
				152	
			15-7360-84	151	1
			15-7360-90	81	1
				151	
			15-7360-91	81	1
			15-7366	131	NP
			15-7366-13	131-12	1
			15-7367	59	2
			15-7367-49	59	2
			15-7369	172	1
			15-7372	68-26	NP
				70	
			15-7372-1	69-12	NP
				70	
			15-7372-2	69-25	NP
				70	
			15-7372-22	70-5	4
				70-24	
				70-42	
				70-55	
			15-7372-23	70-7	4
				70-26	
				70-44	
				70-57	
			15-7372-4	70-1	1
			15-7372-5	70-20	1
			15-7372-6	70-38	1
			15-7372-71	70-49	1
			15-7372-84	70-50	1
			15-7373	134	NP
			15-7373-17	134-26	1
			15-7373-19	134-27	1
			15-7373-20	134-28	1
			15-7373-21	134-29	1
			15-7373-25	71-12	NP
			15-7373-26	134	1
			15-7373-27	134	1
			15-7373-28	134	1
			15-7374	77	NP
			15-7374-1	77	NP
			15-7374-2	77-1	1
			15-7374-3	77	1
			15-7374-58	77	1
			15-7374-59	77	1
			15-7376	59	2
			15-7378	172-47	1
			15-7379-25	109	2
			15-7382	111-1	NP
				112	
			15-7384	142	NP
			15-7384-1	142-45	1
			15-7384-13	142-43	1
			15-7384-20	142-42	1
			15-7384-8	142-44	1
			15-7385	59-1	2
			15-7385-2	59-2	2
			15-7385-5	59	2
			15-7388-2	59-8	1
			15-7389	172	1
			15-7389-1	172-23	1
			15-7389-19	172-26	1
			15-7389-20	172-27	2
			15-7470-15	172-40	1
			15-7470-3	172-31	1
			15-7470-7	172-32	1
			15-7475	5	NP
			15-7475-1	5	NP
			15-7475-11	5	1
			15-7475-2	5-5	1
			15-7476-64	9-14	NP
				11	
			15-7476-65	9	NP
				11	
			15-7476-66	11	1
				34	
			15-7476-67	11	1
				34	
			15-7476-80	11	1
				34	
			15-7476-81	11	1
				34	
			15-7478	58	NP
			15-7478-2	58-25	1
			15-7478-3	58	1
			15-7479-34	59	1
			15-7483-106	11-5	2
			15-7483-85	11-6	2
			15-7486	151-21	1
			15-7486-1	151-22	1
			15-7513	78	NP
			15-7513-1	78	1
			15-7513-47	78	NP
			15-7513-48	78	1
			15-7513-54	78	1
			15-7514	78	NP
			15-7514-1	78	1
			15-7514-47	78-59	1
			15-7514-48	78-60	1
			15-7515	136	NP
			15-7515-1	136-7	1
			15-7515-11	136-19	1
			15-7515-12	136-14	1
			15-7515-13	136-15	1
			15-7515-14	136-11	1
			15-7515-15	136-4	1
			15-7515-16	136-3	1
			15-7515-17	136-5	1
			15-7515-19	136-25	1
			15-7515-24	136-12	1
			15-7515-29	136-6	1
			15-7515-3	136-35	1
			15-7515-30	136-20	1
			15-7515-31	136-17	1
			15-7515-32	136-18	1
			15-7515-33	136-21	1
			15-7515-34	136-2	1
			15-7515-35	136-1	1
			15-7515-36	136	1
			15-7515-37	136	1
				206-13	
			15-7515-38	136-16	1
			15-7515-39	136-24	1
			15-7515-4	136-36	1
			15-7515-40	136-8	1

PUBLISHED BY AVIALOGS.COM

U. S. Army	U. S. Navy	British	Part Number	Figure & Index No.	Total Qty.
			15-7515-42	136-33	1
			15-7515-43	136	1
			15-7515-44	136	1
			15-7515-45	136	1
			15-7515-46	136	1
			15-7515-47	136	1
			15-7515-48	136	1
			15-7515-49	136	1
			15-7515-50	136	1
			15-7515-51	136	1
			15-7515-52	136	1
			15-7515-53	136-22	1
			15-7515-6	136-34	1
			15-7516	151-42	NP
				152	
			15-7516-1	152	1
			15-7516-4	152-16	1
			15-7518	152	NP
			15-7518-1	80-1	1
				151-41	
				152-28	
			15-7518-4	80	1
			15-7520	151	NP
			15-7520-33	151	1
			15-7520-35	151-34	1
			15-7520-36	151	1
			15-7522	134	NP
			15-7524	151	NP
			15-7524-1	151	NP
			15-7533-1	134	NP
			15-7533-11	134-14	4
			15-7533-2	134	NP
			15-7533-3	134	NP
			15-7533-8	134-13	4
			15-7536	79	NP
			15-7536-1	79-28	1
				96	
			15-7572	81-18	1
			15-7573	77	1
			15-7573-1	77	1
			15-7573-10	77-5	2
			15-7573-2	77-2	1
			15-7573-3	77	1
			15-7573-8	77-4	2
			15-7575-32	108-15	1
			15-7577	71-13	NP
				134	
			15-7577-1	134-33	2
			15-7577-3	134-34	2
			15-7579	136	NP
			15-7579-1	136	1
			15-7579-13	136	1
			15-7579-3	136	1
			15-7579-4	136	1
			15-7582-4	160	1
			15-7582-5	160-1	1
			15-7582-6	160-17	2
			15-7588-1	73-45	NP
				135	
			15-7588-2	73-46	NP
				135	
			15-7588-3	135-36	2
			15-7588-5	135-37	2
			15-7590-4	107-27	1
			15-7590-8	107-30	1
			15-7595	78	NP
			15-7595-1	78-38	1
			15-7600	50	NP
				61	
				139	
			15-7600-10	50-8	2
			15-7600-105	50-13	1
			15-7600-106	50	1
			15-7600-107	50-14	1
			15-7600-108	50	1
			15-7600-109	50-15	1
			15-7600-11	50-9	2
			15-7600-110	50	1
			15-7600-111	50-12	1
			15-7600-112	50	1
			15-7600-113	50	2
			15-7600-117	50	2
			15-7600-12	50-10	2
			15-7600-125	139-6	1
			15-7600-128	50-54	1
			15-7600-129	50-51	1
			15-7600-13	61-2	2
			15-7600-130	50-49	1
			15-7600-131	139-9	1
			15-7600-132	139-5	1
			15-7600-135	50-52	1
			15-7600-136	50-50	1
			15-7600-137	50-48	1
			15-7600-138	139-12	1
			15-7600-139	139-8	1
			15-7600-14	61-3	2
			15-7600-140	50	1
			15-7600-141	50	1
			15-7600-142	50	1
			15-7600-144	139-7	1
			15-7600-145	50	1
			15-7600-146	50	1
			15-7600-149	50-19	2
			15-7600-15	61-4	2
			15-7600-150	50-18	2
			15-7600-151	50-21	2
			15-7600-152	50-22	2
			15-7600-159	50-3	2
			15-7600-16	61-5	2
			15-7600-160	50-4	2
			15-7600-161	50-5	2
			15-7600-162	50-6	2
			15-7600-17	61-6	2
			15-7600-18	61-7	2
			15-7600-186	139-4	1
			15-7600-187	139-2	1
			15-7600-188	139-3	1
			15-7600-189	139-1	1
			15-7600-19	61-10	1
			15-7600-190	139-22	1
			15-7600-191	139-19	1
			15-7600-192	139-11	1
			15-7600-193	139-10	1
			15-7600-197	50-30	1
			15-7600-198	50-28	1
			15-7600-20	61-11	1
			15-7600-201	50	1
			15-7600-202	50	1
			15-7600-203	50-27	4
			15-7600-204	50-25	2
			15-7600-205	50-31	1
			15-7600-206	50-29	1
			15-7600-209	50	1
			15-7600-21	61-12	1
			15-7600-210	50	1
			15-7600-212	50-26	2
			15-7600-213	61-8	2
			15-7600-22	61-13	1
			15-7600-220	139-35	1
			15-7600-221	139-34	1
			15-7600-222	130-36	1
			15-7600-223	139	1
			15-7600-224	139	1
			15-7600-225	50-44	1
			15-7600-226	50-45	1
			15-7600-227	50	1
			15-7600-228	50	1
			15-7600-229	139-26	1
			15-7600-23	61-14	1
			15-7600-230	50	1
			15-7600-231	139-27	1
			15-7600-233	50-55	1
			15-7600-234	50	1
			15-7600-235	50-53	1
			15-7600-236	50	1
			15-7600-237	50	1

PUBLISHED BY AVIALOGS.COM

U. S. Army	U. S. Navy	British	Part Number	Figure & Index No.	Total Qty.
			15-7600-238	50	1
			15-7600-239	50	1
			15-7600-24	61-15	1
			15-7600-240	50	1
			15-7600-241	50	1
			15-7600-242	50	1
			15-7600-245	50	1
			15-7600-246	139-44	1
			15-7600-247	50	1
			15-7600-248	139-43	1
			15-7600-249	50	1
			15-7600-25	61-16	1
			15-7600-250	139-30	1
			15-7600-251	50	1
			15-7600-252	50-42	1
			15-7600-253	139-33	1
			15-7600-254	50-43	1
			15-7600-255	139-28	1
			15-7600-256	139-29	1
			15-7600-257	139-31	1
			15-7600-258	139-32	1
			15-7600-259	139	1
			15-7600-26	61-17	1
			15-7600-260	50-57	1
			15-7600-261	50-56	1
			15-7600-263	61	2
				139	
			15-7600-27	50-11	2
			15-7600-28	61-18	1
			15-7600-29	50	1
			15-7600-30	50	2
			15-7600-34	50	2
			15-7600-35	50	2
			15-7600-39	50	2
			15-7600-44	61-21	1
			15-7600-45	61	1
			15-7600-47	61-20	1
			15-7600-56	50-33	1
			15-7600-57	50-35	1
			15-7600-58	50-37	1
			15-7600-59	50-39	1
			15-7600-60	139-38	1
			15-7600-61	139-24	1
			15-7600-62	139-21	1
			15-7600-69	50-32	1
			15-7600-70	50-34	1
			15-7600-71	50-36	1
			15-7600-72	50-38	1
			15-7600-73	139-37	1
			15-7600-74	139-23	1
			15-7600-79	50	1
			15-7600-80	50	1
			15-7600-81	50-40	1
			15-7600-86	50	1
			15-7600-87	50	1
			15-7600-88	50-41	1
			15-7600-89	139-20	1
			15-7600-9	50-7	2
			15-7600-90	139-25	1
			15-7600-91	139-39	1
			15-7600-92	139-40	1
			15-7600-93	139-41	1
			15-7600-94	139-42	1
			15-7600-95	61-24	2
				139-45	
			15-7600-96	61-22	1
			15-7600-97	61-25	1
			15-7600-98	61-26	1
			15-7603	75	NP
			15-7603-6	75	1
				95	
			15-7606-1	78-1	1
			15-7606-24	78-2	1
			15-7606-26	78-3	1
			15-7609	183	NP
			15-7609-1	183-5	4
			15-7609-4	183	4
			15-7615	59	NP
			15-7615-1	59	NP
			15-7617	58	NP
			15-7617-2	58-15	1
			15-7617-3	58	1
			15-7624	181	4
			15-7624-1	181-1	4
			15-7624-16	181-3	8
			15-7624-17	181-4	4
			15-7624-2	181-2	4
			15-7630	58-7	NP
				60	
			15-7630-10	60-6	1
			15-7630-3	60-7	1
			15-7630-4	60-8	1
			15-7630-5	60-9	1
			15-7630-9	60-5	1
			15-7631	58-8	NP
				60	
			15-7631-1	60-10	1
			15-7631-2	60-11	1
			15-7632	58-3	NP
				60	
			15-7632-1	58	NP
				60	
			15-7632-14	60-3	1
			15-7632-15	60	1
			15-7632-16	60-4	1
			15-7632-17	60	1
			15-7632-18	60-2	1
			15-7632-19	60	1
			15-7632-24	60	1
			15-7632-25	60	1
			15-7632-26	60	1
			15-7632-27	60	1
			15-7632-28	60	1
			15-7632-29	60	1
			15-7632-32	60	1
			15-7632-33	60	1
			15-7632-6	60-1	1
			15-7632-7	60	1
			15-7633	79	NP
			15-7636	59	NP
			15-7636-1	59	NP
			15-7637	59	NP
			15-7637-1	59	NP
			15-7638	15	1
			15-7638-1	15-10	1
			15-7638-10	15	1
			15-7638-11	15	1
			15-7638-2	15-13	1
			15-7638-3	15-9	1
			15-7638-4	15-12	1
			15-7638-5	15-11	1
			15-7638-6	15	1
			15-7638-7	15	1
			15-7638-8	15	1
			15-7638-9	15	1
			15-7639	13	1
			15-7639-1	13	1
			15-7639-10	13	1
			15-7639-11	13	1
			15-7639-2	13-51	1
			15-7639-3	13-49	1
			15-7639-4	13	1
			15-7639-5	13-53	1
			15-7639-6	13	1
			15-7639-7	13-52	1
			15-7639-8	13	1
			15-7639-9	13-50	1
			15-7647	29	1
			15-7647-1	29	1
			15-7647-8	29	1
			15-7647-9	29	1
			15-7653-12	177	1
			15-7653-2	177	1
			15-7653-20	177	1

PUBLISHED BY AVIALOGS.COM

U. S. Army	U. S. Navy	British	Part Number	Figure & Index No.	Total Qty.
			15-7653-21	177-21	1
			15-7653-31	177-22	4
			15-7653-33	177	1
			15-7653-34	177	1
			15-7653-35	177	1
			15-7653-36	177	1
			15-7653-37	177	4
			15-7653-41	177	1
			15-7653-42	177	1
			15-7653-43	177	1
			15-7653-44	177	1
			15-7654	34-25	NP
				35-16	
			15-7654-1	34	NP
				35	
			15-7654-3	35	1
			15-7654-4	35	1
			15-7655-5	182	14
			15-7655-6	182	2
			15-7655-7	182	2
			15-7655-8	182	14
			15-7662	181-7	2
			15-7664	183	NP
			15-7664-1	183	NP
			15-7666-27	183	1
			15-7666-28	183	1
			15-7666-29	183-2	1
			15-7666-30	183	1
			15-7666-31	183	NP
			15-7666-32	183	NP
			15-7667	183	NP
			15-7668-41	183	1
			15-7668-42	183	1
			15-7668-43	183-1	1
			15-7668-44	183	1
			15-7668-45	183	NP
			15-7668-46	183	NP
			15-7672	183	6
			15-7672-5	183-30	2
			15-7672-5	183-30	2
			15-7673-1	183	1
			15-7673-22	183	1
			15-7673-23	183-33	1
			15-7673-3	183-35	1
			15-7673-4	183-32	1
			15-7673-5	183-34	1
			15-7674	183	1
			15-7674-1	183	1
			15-7674-2	183-24	1
			15-7674-3	183	1
			15-7674-4	183-25	1
			15-7674-5	183	1
			15-7675-22	183	1
			15-7675-23	183	1
			15-7675-24	183-27	1
			15-7675-25	183	1
			15-7675-4	183-26	1
			15-7675-5	183	1
			15-7681	177	NP
			15-7681-1	177	NP
			15-7681-4	177-14	2
			15-7681-9	177-15	2
			15-7682	177	NP
			15-7682-2	177-17	2
			15-7682-6	177-18	2
			15-7682-7	177-19	2
			15-7682-9	177-20	2
			15-7688	15	NP
			15-7688-33	15	2
				186	
			15-7689-10	48	1
			15-7689-100	48	1
			15-7689-104	48	1
			15-7689-106	48	1
			15-7689-110	122-33	1
			15-7689-111	122-27	1
			15-7689-114	48-8	1
			15-7689-116	48-9	1
			15-7689-118	48-10	1
			15-7689-119	48-11	1
			15-7689-12	48	1
			15-7689-122	48-12	1
			15-7689-126	122-37	1
			15-7689-127	122-41	1
			15-7689-128	122-46	1
			15-7689-130	48	1
			15-7689-132	48	1
			15-7689-139	122-24	1
			15-7689-14	48	1
			15-7689-140	122-28	1
			15-7689-143	48-5	1
			15-7689-145	48-6	1
			15-7689-148	48-7	1
			15-7689-15	48	1
			15-7689-17	48	1
			15-7689-173	48	1
			15-7689-20	48	1
			15-7689-24	48	1
			15-7689-28	122-22	1
			15-7689-29	122-26	1
			15-7689-32	48-21	1
			15-7689-34	48-22	1
			15-7689-36	48-23	1
			15-7689-37	48-24	1
			15-7689-39	48-25	1
			15-7689-4	122-39	1
			15-7689-40	48-26	1
			15-7689-44	48-27	1
			15-7689-48	48-28	1
			15-7689-5	122-43	1
			15-7689-52	122-40	1
			15-7689-53	122-44	1
			15-7689-54	122-49	1
			15-7689-56	48	1
			15-7689-58	48	1
			15-7689-6	122-48	1
			15-7689-60	48	1
			15-7689-62	48	1
			15-7689-63	48	1
			15-7689-65	48	1
			15-7689-68	48	1
			15-7689-69	48	1
			15-7689-73	122-21	1
			15-7689-74	122-25	1
			15-7689-77	48-13	1
			15-7689-79	48-14	1
			15-7689-8	48	1
			15-7689-81	48-15	1
			15-7689-82	48-16	1
			15-7689-84	48-17	1
			15-7689-85	48-18	1
			15-7689-89	48-19	1
			15-7689-90	48-20	1
			15-7689-94	122-38	1
			15-7689-95	122-42	1
			15-7689-96	122-47	1
			15-7689-98	48	1
			15-7772	26-4	NP
				29	
			15-7772-1	27-6	NP
				29	
			15-7772-4	29-3	4
			15-7773	26-5	NP
				29	
			15-7773-1	27-5	NP
				29	
			15-7773-4	29	4
			15-7774	131	NP
			15-7774-2	127-35	2
			15-7775	151-17	1

PUBLISHED BY AVIALOGS.COM

U. S. Army	U. S. Navy	British	Part Number	Figure & Index No.	Total Qty.
			15-7776	151-16	1
			15-7777	151	NP
			15-7781	160-42	NP
				164	
			15-7781-1	160	NP
				164	
			15-7781-2	164-1	1
			15-7781-3	164	1
			15-7781-4	164-2	1
			15-7781-5	164	1
			15-7781-6	164	1
			15-7781-7	164	1
			15-7784	11	NP
			15-7784-1	11	NP
			15-7784-2	11-10	2
			15-7785	130-2	1
			15-7786	130-1	1
			15-7944	29	1
			15-7944-5	29	1
			15-7947	160	NP
			15-7951-10	161	1
			15-7951-11	161	1
			15-7951-12	161	1
			15-7951-13	161	1
			15-7951-14	161	1
			15-7951-3	161	1
			15-7951-4	161	1
			15-7951-5	161-3	1
			15-7951-6	161	1
			15-7951-7	161-2	1
			15-7951-8	161	1
			15-7951-9	161	1
			15-7952-12	162-3	2
			15-7952-13	162-2	1
			15-7952-14	162	1
			15-7952-21	162	1
			15-7952-22	162	1
			15-7952-27	162	1
			15-7952-28	162	1
			15-7952-3	162	1
			15-7952-4	162	1
			15-7953-10	161	1
			15-7953-11	161	1
			15-7953-12	161	1
			15-7953-13	161	1
			15-7953-14	161	1
			15-7953-49	161	1
			15-7953-50	161	1
			15-7953-9	161-1	1
			15-7954	162-1	1
			15-7954-15	162	1
			15-7954-16	162	1
			15-7954-17	162	1
			15-7954-18	162	1
			15-7954-21	162	1
			15-7954-22	162	1
			15-7955	161	NP
				162	
			15-7957	162-20	1
			15-7957-1	162	1
			15-7957-10	162	1
			15-7957-11	162	1
			15-7958	161-13	1
			15-7958-1	161	1
			15-7958-11	161	1
			15-7958-12	161	1
			15-7970-1	181-56	24
			15-7971-2	181-29	2
			15-7971-3	181-20	2
			15-7975-122	2	1
				9	
				11	
			15-7975-123	2	1
				9	
				11	
			15-7975-167	9-1	1
				12	
			15-7975-168	9	1
				12	
			15-7975-81	2-1	1
				9	
				11	
			15-7975-82	2	1
				9	
				11	
			15-7983	115	NP
			15-7983-1	115	1
			15-7983-2	115-4	1
			15-7983-8	115-6	1
			15-7985	111	NP
			15-7985-14	111	1
			15-7985-15	111	1
			15-7985-16	111	1
			15-7988-12	121-24	1
			15-7988-14	121-14	1
			15-7988-19	121-31	1
			15-7988-2	48-3	1
			15-7988-21	121-11	1
			15-7988-23	121-38	1
			15-7988-24	121-9	1
			15-7988-26	121-28	1
			15-7988-27	121-39	1
			15-7988-28	121-32	1
			15-7988-29	121-33	1
			15-7988-30	121-40	1
			15-7988-31	121-29	1
			15-7988-33	121-47	1
			15-7988-34	121-48	1
			15-7988-36	121-34	1
			15-7988-4	48-2	1
			15-7988-45	121-54	1
			15-7988-46	48	2
				121-36	
			15-7988-48	48	1
			15-7988-5	48-1	2
				121-20	
			15-7988-51	48	1
			15-7988-58	121-52	1
			15-7988-59	121-23	1
			15-7988-7	121-18	1
			15-7988-8	121-17	1
			15-7988-9	121-16	1
			15-7989	121	NP
			15-7989-21	121-74	1
			15-7989-22	121-75	1
			15-7989-23	121-78	1
			15-7989-24	121-80	1
			15-7989-25	121-77	1
			15-7989-26	121-68	1
			15-7989-28	121	1
			15-7989-29	121-82	1
			15-7989-30	121-83	1
			15-7989-5	121-70	3
			15-7991-12	64-2	1
			15-7991-13	64-5	1
			15-7991-14	64-4	1
			15-7991-18	64-3	1
			15-7991-20	64-16	1
			15-7991-21	64-13	1
			15-7991-22	64-14	1
			15-7991-24	64-18	1
			15-7991-26	64	1
			15-7991-27	64-1	1
			15-7991-28	64	NP
			15-7991-3	64-12	2
			15-7991-36	64-15	1
			15-7991-5	64-19	1
			15-7993-103	68	1
			15-7994	15	NP
			15-7994-1	15	NP

PUBLISHED BY AVIALOGS.COM

U. S. Army	U. S. Navy	British	Part Number	Figure & Index No.	Total Qty.
			15-7994-2	15-3	2
			15-8027	176	4
			15-8027-1	176-8	12
			15-8027-3	176	4
			15-8522	26-9	NP
				28	
			15-8522-1	27-9	NP
				28	
			15-8522-10	28	1
			15-8522-11	28	1
			15-8522-2	28	2
			15-8522-4	28	1
			15-8522-5	28	1
			15-8522-6	28	1
			15-8522-7	28	1
			15-8522-8	28	1
			15-8522-9	28	1
			15-8524-2	176-11	12
			15-8529	127	NP
			15-8529-1	127-1	1
			15-8529-11	127	1
			15-8538	87-1	NP
				88-1	
				91	
				194-1	
				195-1	
			15-8538-1	91-1	1
			15-8538-10	91	1
			15-8538-11	91	1
			15-8538-12	91	1
			15-8538-16	91	1
			15-8538-17	91	1
			15-8538-2	91-27	1
			15-8538-3	91-28	1
			15-8541	26-8	NP
				28	
			15-8541-1	27-10	NP
				28	
			15-8541-10	28	1
			15-8541-11	28	1
			15-8541-2	28	2
			15-8541-4	28	1
			15-8541-5	28	1
			15-8541-6	28	1
			15-8541-7	28	1
			15-8541-8	28	1
			15-8541-9	28	1
			15-8752-4	121-65	1
			15-8757-2	67-3	1
			15-8757-3	67	1
			15-8760	64-6	1
			15-8761	67-14	1
			15-8761-1	67	1
			15-8765	65-54	NP
				67	
			15-8765-1	67	1
			15-8765-122	67-28	2
			15-8765-132	67	1
			15-8765-147	67	1
			15-8765-151	67	1
			15-8765-16	67-26	2
			15-8765-17	67-27	2
			15-8769	128	NP
				131	
			15-8769-11	128-2	1
			15-8769-13	128-3	1
			15-8769-7	128-14	1
			15-8769-8	128-15	1
			15-8774	81-3	1
			15-8775	81-2	NP
			15-8778	81	NP
			15-8778-10	81	1
			15-8778-5	81-4	1
			15-8779	81-5	1
			15-8785	149	NP
			15-8785-1	149	NP
			15-8785-5	149	1
			15-8785-6	149	1
			15-8793	128	NP
			15-8796	131	NP
			15-9004	141	NP
			15-9266	98	NP
			15-9270	45-1	NP
				46	
			15-9270-1	45	NP
				46	
			15-9270-14	43	1
			15-9270-15	46	1
			15-9270-16	46	1
			15-9270-17	46	1
			15-9270-20	46	1
			15-9270-6	46-1	1
			15-9270-7	46	1
			15-9272	48	NP
				121	
				122	
			15-9272-100	121	1
			15-9272-101	121	1
			15-9272-102	48	2
				121	
			15-9272-103	48	1
			15-9272-31	121-51	1
			15-9272-33	121-53	1
			15-9272-41	121-49	1
			15-9272-72	121-41	1
			15-9272-74	121-30	1
			15-9272-85	121-45	1
			15-9272-88	121-44	1
			15-9272-89	121-42	1
			15-9272-92	121-50	1
			15-9272-93	121-43	1
			15-9272-96	121-8	1
			15-9272-97	121	1
			15-9272-98	48	1
			15-9272-99	48	1
			15-9275	99-1	NP
				100	
			15-9275-3	100	1
			15-9275-4	100	1
			15-9275-5	100	1
			15-9275-7	100	1
			15-9293	163	NP
			15-9469	39	NP
				40	
			15-9469-1	39-16	1
			15-9469-13	39-17	1
			15-9469-14	40-12	1
			15-9469-19	39-12	2
				40-7	
			15-9469-2	40-11	1
			15-9469-3	39-15	1
			15-9469-4	40-10	1
			15-9469-5	39-14	1
			15-9469-6	40-9	1
			15-9470	26	NP
				27	
				190	
				191	
			15-9470-1	190	1
			15-9470-10	26-49	2
				27-46	
			15-9470-11	191-5	1
			15-9470-124	26	1
			15-9470-125	26	1
			15-9470-126	26	1
			15-9470-127	27	1
			15-9470-128	27	1
			15-9470-129	27	1
			15-9470-13	191	1
			15-9470-131	27	1
			15-9470-133	27	1

PUBLISHED BY AVIALOGS.COM

U. S. Army	U. S. Navy	British	Part Number	Figure & Index No.	Total Qty.
			15-9470-134	27	1
			15-9470-135	27	1
			15-9470-136	26	1
			15-9470-137	27	1
			15-9470-138	27	1
			15-9470-14	191	1
			15-9470-142	26	1
			15-9470-143	26-39	1
			15-9470-144	191-14	1
			15-9470-145	191	1
			15-9470-146	191	1
			15-9470-157	27	1
			15-9470-158	27	1
			15-9470-159	27	1
			15-9470-161	27	1
			15-9470-163	27	1
			15-9470-17	191-8	1
			15-9470-192	190	2
			15-9470-194	26-13	1
			15-9470-195	26-14	1
			15-9470-199	27-11	1
			15-9470-2	191-7	1
			15-9470-200	27-12	1
			15-9470-201	27-13	1
			15-9470-202	27-32	1
			15-9470-203	27-31	1
			15-9470-204	27-30	1
			15-9470-206	191	1
			15-9470-207	26-29	1
			15-9470-208	26-30	1
			15-9470-209	26-31	1
			15-9470-217	26	2
			15-9470-219	27	1
			15-9470-220	27	1
			15-9470-221	27	1
			15-9470-222	27	1
			15-9470-223	27	1
			15-9470-224	191	1
			15-9470-225	191	1
			15-9470-226	26-35	1
			15-9470-227	26-34	1
			15-9470-229	199-13	1
			15-9470-230	199-14	1
			15-9470-231	27-20	1
			15-9470-232	27-19	1
			15-9470-233	27-18	1
			15-9470-234	27-17	1
			15-9470-235	27	1
			15-9470-236	191	1
			15-9470-237	26-11	1
			15-9470-238	26	1
			15-9470-239	26	1
			15-9470-24	26-40	1
			15-9470-240	26	1
			15-9470-241	26	1
			15-9470-242	26	1
			15-9470-243	26	1
			15-9470-244	27	1
			15-9470-245	27	1
			15-9470-246	27	1
			15-9470-247	27	1
			15-9470-248	27	1
			15-9470-249	27	1
			15-9470-250	26-12	1
			15-9470-251	26	1
			15-9470-254	26	1
			15-9470-26	190-7	1
			15-9470-27	190	1
			15-9470-29	26-27	1
			15-9470-30	26-26	1
			15-9470-31	26-25	1
			15-9470-34	190	1
			15-9470-4	27-45	1
			15-9470-41	191	1
			15-9470-43	27-41	1
			15-9470-44	27-36	1
			15-9470-45	27-40	1
			15-9470-47	27	1
			15-9470-48	27	1
			15-9470-49	26	1
			15-9470-5	190-6	1
			15-9470-50	26	1
			15-9470-51	27-25	1
			15-9470-58	27-38	1
			15-9470-59	27-21	1
			15-9470-60	199-11	1
			15-9470-61	199-12	1
			15-9470-632	26-33	1
			15-9470-64	27	1
			15-9470-68	27	1
			15-9470-70	27	1
			15-9470-8	190	1
			15-9470-94	26	1
			15-9470-95	26	1
			15-9471	23	NP
				105	
				188	
				189	
			15-9471-1	105-1	1
			15-9471-102	188	2
			15-9471-103	189	2
			15-9471-107	189	1
			15-9471-108	188	1
			15-9471-2	23-19	2
			15-9471-38	23	2
			15-9471-39	23	2
				105	
			15-9471-91	189	1
			15-9471-92	189	1
			15-9471-93	188	1
			15-9471-97	189-6	1
			15-9472	163	NP
			15-9474	128	NP
			15-9474-4	128-8	1
			15-9476	177	NP
			15-9497	58-24	NP
				63-1	
				196-7	
			15-9497-1	63	1
			15-9497-2	63-8	1
			15-9579-43	82	1
			15-9752	184	NP
			15-9752-1	185	NP
			15-9753	184	NP
			15-9753-1	185	NP
			15-9754	184	NP
			15-9754-1	185	NP
			15-9755	184	NP
			15-9755-1	185	NP
			15-9759	65-55	NP
				82	
			15-9759-149	82	1
			15-9759-150	65	NP
				82	
			15-9759-2	82	1
			15-9759-3	82	1
			15-9759-8	82-2	1
			15-9759-9	82	1
			15-9760	128	NP
			15-9760-16	128-16	2
			15-9761	85	NP
			15-9761-1	85	1
			15-9761-12	85	1
			15-9761-13	85	1
			15-9761-14	85	1
			15-9761-15	85	2
			15-9761-2	85	1
			15-9761-3	85	1
			15-9770	34	NP
			15-9770-1	34	NP
			15-9770-5	32-22	8
			15-9771	33	NP
			15-9771-1	33	NP
			15-9771-10	64-10	1
			15-9771-4	33-23	8
			15-9783-10	35-2	4

PUBLISHED BY AVIALOGS.COM

U. S. Army	U. S. Navy	British	Part Number	Figure & Index No.	Total Qty.
			15-9783-12	35	4
			15-9784-10	36	2
			15-9784-11	36	2
			15-9784-12	33-9	2
				34-9	
				36	
			15-9784-13	33	2
				34	
				36	
			15-9784-19	36	2
			15-9784-2	36-12	2
			15-9784-21	33	2
				34	
				36	
			15-9784-22	33	2
				34	
				36	
			15-9784-28	33	2
				34	
				36	
			15-9784-29	33	2
				34	
				36	
			15-9784-9	36	2
			15-9785-12	34-12	1
			15-9785-13	34	1
			15-9787-3	35-9	4
			15-9790	33-11	NP
				35	
			15-9790-1	35	NP
			15-9795	34-13	NP
				35-1	
			15-9795-1	35	NP
			15-9796	17-43	NP
				31-27	
				32-27	
				33	
				34	
				39-62	
				40-63	
			151	111-78	1
				121-79	
				199-10	
			15465-5D	47-6	2
			15465-6D	47-7	2
			165-22-315E	111-52	2
			1660	134-7	1
			1660-197	134-6	1
			17-7954-1	162	1
			17269	135-61	5
			17556	29	4
				44	
			17588-4	41-14	1
			1779M1	76	118
			181-22	126-29	4
			18174	135-58	2
			1928E	143-27	1
				203-2	
			2-1868	53-55	1
			2-1885	3	NP
				44-14	
			2-1885-1	3	NP
				44	
			2-1885-2	3-5	2
			2-1885-3	3	1
			2-1885-4	3	1
			2-1942-18	121-22	1
			2-1960-6	53-48	1
			2-1969	53-46	1
			2-1970	53-43	1
			2-1971	53-45	1
			2-2080	17-38	1
			2-2080-1	17	1
			2-2092	53-72	2
			2-28836	43-11	2
			2-639-6-23D1	125-33	1
			2CC1B4	109	4
			2CD2868	135-69	1
			2CD2934	135-71	1
			2CD2948	135-68	1
			2CD5016	117-12	1
				135-67	
				205-3	
			2CD5033	135-70	2
			2CD5038	135-72	1
			2D6928-4	30-7	4
			2E3078	29	4
				44	
			2F1-1-3073	28	2
			2F1-1-3073-1	28	2
			2F1-1-3074	28	2
				28-1	
			2F1-3074-1	28	2
			2F1-6-1426	24-27	1
			2F1-6-1426-1	24	1
			2F1-6-1778	106-38	1
			2F1-6-2831	24-1	1
			2F1-6-2831-1	24	1
			2F1-6-2832	24-2	1
			2F1-6-2832-1	24	1
			2F1-6-2833	24-3	1
			2F1-6-2833-1	24	1
			2F1-6-2834	24-4	1
			2F1-6-2834-1	24	1
			2F1-6-2835	24-5	1
			2F1-6-2835-1	24	1
			2F1-6-2836	24-6	1
			2F1-6-2836-1	24	1
			2F1-6-2837	24-15	1
			2F1-6-2837-1	24	1
			2F1-6-2838	24-16	1
			2F1-6-2838-1	24	1
			2F1-6-2839	24-17	1
			2F1-6-2839-1	24	1
			2F1-6-3602	24-26	1
			2F1-6-3602-1	24	1
			2F1-6-3603	24-28	1
			2F1-6-3603-1	24	1
			2F1-6-7152	24	1
			2F1-6-7152-1	24	1
			2F1-6-7153	24	1
			2F1-6-7153-1	24	1
			2F1-6-7154	24	1
			2F1-6-7154-1	24	1
			2F1-6-7241	24	1
			2F1-6-7241-1	24	1
			2F1-6-7242	24	1
			2F1-6-7242-1	24	1
			2F1-6-7243	24	1
			2F1-6-7243-1	24	1
			2F1-6-7244	24	1
			2F1-6-7244-1	24	1
			2F1-6-7245	24	1
			2F1-6-7245-1	24	1
			2F1-6-7246	24	1
			2F1-6-7246-1	24	1
			2F1-6-7247	24	1
			2F1-6-7247-1	24	1
			2F1-6-7248	24	1
			2F1-6-7248-1	24	1
			2F1-6-7249	24	1
			2F1-6-7249-1	24	1
			2F1-6-8459-1	28	1
			2F1-6-8459-2	28	1
			2F1-6-8459-3	28	1
			2F1-6-8459-4	28	1
			2F6-1778-1	106	1
			2K148	82-60	2
			2R6697	29-1	4
				44-35	
			20122	135-28	2
			2028	111-71	2
				111-76	
			203-12L	126-19	4
			203-15	126-30	4
			21-1022-8-5	73	4

PUBLISHED BY AVIALOGS.COM

U. S. Army	U. S. Navy	British	Part Number	Figure & Index No.	Total Qty.
			21-2136	92	4
			21-2136-2	92	4
			21-2169	92-18	4
			21-2226-2	92-27	2
			21-2362-72-56	92-11	8
			21-2363-128-86	54-8	1
			21-2363-48-17	92-39	4
			21-2364-40-26	94-23	2
			21-2364-48-33	93-7	1
			21-2364-72-56	92-14	4
			21-2366-32-11	110	4
				116	
			21-2366-58-44	7-17	2
			21-2366-68-26	94-22	1
			21-3339-106	140-2	1
			21-3753	92-5	4
			21-3754-1	92-7	4
			21-3894-24-13	143	4
			21-4213-6-4	47-8	4
			21-4585-42-12	92-36	2
			21-5136	168-15	2
			21-5179	92-33	8
			21-5179-2	92-34	8
			21-5538	159-13	2
				159-17	
			21-556-1	166-21	2
			21-5566	5-10	52
			21-5566-1	3-20	16
				5-11	
			21-557	166-22	2
			21-5584	160-15	4
			21-5618-3	67-21	2
			21-5641	84-11	4
			21-5743	5-7	60
			21-5833	6-1	1
			21-5833-1	6	1
			21-5833-2	6	1
			21-5833-3	6	1
			21-5834	6-2	1
			21-5834-1	6	1
			21-5834-2	6	1
			21-5834-3	6	1
			21-5835	6-4	2
				6-6	
			21-5835-1	6	2
			21-5835-2	6	2
			21-5835-3	6	2
			21-5836	6-5	2
				6-7	
			21-5836-1	6	2
			21-5836-2	6	2
			21-5836-3	6	2
			21-5931-4	94-7	1
			21-5943	94-12	2
				103-20	
			21-5960	84-7	4
			21-5963	84-6	4
			21-6092-45-31	172-13	1
			21-6094	3-30	2
			21-6094-1	3-31	2
			21-6107	3-14	2
			21-6107-1	3-15	2
			21-6108	3-16	2
			21-6108-1	3-17	2
			21-6240-1	67-24	1
			21-6264-9	8-11	10
				8-12	
				8-13	
				8-14	
				8-15	
				8-16	
				8-17	
				8-18	
				8-19	
				8-20	
			21-6294	174	1
			21-6294-3	174-7	1
			21-6294-4	174-8	2
				175-7	
			21-6294-5	174-9	2
				175-8	
			21-6294-6	175-6	1
			21-6294-7	175	1
			21-6305	174-14	2
				175-16	
			21-6306	174-15	2
				175-17	
			21-6355	174	1
			21-6355-1	174-10	1
			21-6355-3	174-11	2
				175-10	
			21-6355-6	175	1
			21-6355-7	175-9	1
			21-6356	174-16	2
				175-18	
			21-6359	174-19	2
				175-21	
			21-6377-6-3	174-20	8
				175-22	
			21-6385-80-45	156-21	2
			21-6420	174-2	2
				175-2	
			21-6588-80-21	154-20	2
			21-6671-14H3	33-21	16
				34-20	
			21-6708-2	12-31	8
				12-39	
			21-6717	174-3	1
			21-6718-3	175-3	2
			21-6758	75-18	1
				96-11	
			21-6854-2	12-38	6
			21-6867	169-11	6
				169-39	
			21-6926	169-28	2
			21-6928-50	96-22	1
			21-6928-75	96-10	1
			21-6947-1	169-29	4
			21-6948	169-2	2
			21-6948-3	169-13	6
				169-41	
			21-6966-1	159-4	1
			21-6974-1	159-7	2
			21-6979	159-8	1
			21-7007-5	73-38	1
			21-7007-6	73-35	1
			21-7008-5	73-33	1
			21-7013	73	1
			21-7013-1	73-50	1
			21-7020	73	1
			21-7021	73	1
			21-7030-1	73-40	1
			21-7196-14	93-6	1
			21-7312-5	7-15	2
			21-7312-6	7-16	2
			21-7440-3	47	6
				47-2	
			21-7468	93-8	1
			21-7484	68-62	2
				69-24	
			21-7484-2	68-63	1
			21-7512	69-23	1
			21-7606	110	1
			21-7606-1	111-23	1
			21-7829	171-25	1
			21-7859	112-3	1
			21-8364-4	113-5	2
			21-8440	169-4	2
			21-8444	171-6	1
			21-8645-20-10	13-30	4
			21-8891-4	113	2
			21-9064	68-52	1
			21-9064-1	68-53	1
			21-9083	167-36	2
			21-9084	167-51	2

PUBLISHED BY AVIALOGS.COM

U. S. Army	U. S. Navy	British	Part Number	Figure & Index No.	Total Qty.
			21-9212	164	2
			21-9233	164-8	2
			21-9352	84-17	2
			21-9360	91-35	1
			21-9360-1	91-36	1
			21-9370	84-14	2
			21-9373-81-75	120-17	1
			21-9388	166-26	2
			21-9389-1	166-27	2
			21-9391	166-28	2
			21-9414	166-29	2
			21-9415	166-30	4
			21-9417	159-3	1
			21-9441-100	96-19	1
			21-9441-150	96-6	1
			21-9443-8	96-4	1
			21-9444	96-9	2
				96-21	
			21-9457	156-12	1
			21-9490-1	156	1
			21-9491	154-30	2
				156-32	
			21-9492	154-27	2
				156-28	
			21-9511	156	1
			21-9511-1	156	1
			21-9531-1	94	4
				100-7	
				103-18	
			21-9531-6	94	1
			21-9533	94-14	2
				103-16	
			21-9574	102-7	4
			21-9579	156-20	1
			21-9586	69-46	1
				97-29	
			21-9587-5	154-6	1
			21-9588	168-33	4
			21-9588-10	166-20	2
			21-9588-11	18	12
			21-9588-12	166-31	2
			21-9588-4	18	2
			21-9588-6	167-45	2
			21-9588-7	167-47	2
			21-9588-8	18	8
			21-9588-9	44-19	8
			21-9672	155-8	5
			21-9677	155-13	3
			21-9677-1	155	2
			21-9678	155-31	5
			21-9682	155-18	5
			21-9683	155-10	5
			21-9751-16	62	NP
				154	
				172	
			21-9751-20	169	NP
			21-9751-8A	154-42	1
			21-9759	83-20	1
			21-9824	155-11	5
			21-9838	168-18	2
			21-9839	168	2
			21-9839-1	168-21	2
			21-9839-2	168-20	2
			21-9839-3	168-17	2
			21-9839-4	168-19	2
			21-9841	168-28	2
			21-9860	155-32	5
			21-9861	155-30	5
			21-9862	155	4
			21-9862-1	155-26	6
			21-9879	156-23	1
			21-9880	156-22	1
			21-9881-1	156	1
			21-9882	156-25	1
			21-9885	94-5	1
			21-9886	155-25	10
			21-9890	156-11	1
			21-9904	94-15	1
			2150H	28-16	8
				28-20	
			215804	180-14	12
			215807	180-2	36
			215808	180-6	36
			215810	180-8	36
			215811	180-7	36
			215812	180-5	36
			215815	180-4	36
			215820	180-11	72
			215821	180-10	As Req.
			215822	180-3	144
			215827	180	36
			217-11	137-15	4
			217-15	137-13	4
			217-16	137-17	4
			217-3C	137-14	4
			217-5J	137-16	4
			217HA	52-8	4
				137-12	
				206-9	
			2181	134-8	18
			22K1-048	175	1
			225	146-19	3
				146-23	
			24-1164	116-23	2
				110-3	
			24335	55-15	1
			24412	55-14	1
			24433	55-29	2
			25-1F	78-40	1
			25-1G	78-29	1
			25-1H	73-7	1
			25-1J	78	1
			25-1L	78-47	1
			25-1M	78-31	1
			25-1N	73	1
			251-2GT8D	121-76	1
				125-13	
				199-9	
			252-5	126-23	1
			252-7C	126-25	1
			25286	55-31	1
			25320	55-25	1
			25321	55-26	1
			25444	55-27	1
			25449	55-28	1
			25473	55-32	1
			25547	55-33	1
			25660	55-20	2
			25663	55-21	2
			25664	55-22	2
			25665	55-23	2
			25667	55-35	1
			25668	55-36	1
			26488	55-16	1
			2660	23-10	4
				44-34	
				198-3	
			270B16	154	8
			270B8	136-28	1
			2700-20	169-15	10
				169-25	
				169-43	
				169-52	
			27250	54-36	2
				55-13	
				121-72	
				199-7	
				203-4	
			27383	55-19	1
			275	111-66	2
				116-13	
			289000	179	NP
				180	
			289001	180-15	4
			2980-40	142-3	2
				142-5	

PUBLISHED BY AVIALOGS.COM

U. S. Army	U. S. Navy	British	Part Number	Figure & Index No.	Total Qty.
			3-10080-2	95-17	1
				171-7	
				171-23	
			3-10298	166-19	2
			3-10475-3	50-47	2
			3-10519-3	50-46	6
			3-10594	111-45	1
			3-10758	135	2
			3-10758-1	135-56	2
			3-10758-2	135-57	2
			3-10812	100-4	2
			3-10813-1	100-6	1
			3-10814	100-5	1
			3-10826	113	NP
			3-10826-1	113	NP
			3-10826-6	113-14	2
			3-11002	103-9	2
			3-11002-2	103-7	2
			3-11002-4	103-25	3
			3-11002-6	101-50	8
			3-11002-8	103-27	3
			3-11003	104-11	4
			3-11003-2	104-15	2
			3-11003-4	104-3	8
			3-11003-6	104-4	10
			3-11003-8	104-7	6
			3-11130-11	101-47	1
			3-11130-12	101-42	1
			3-11133-11	66-36	1
			3-11133-18	103-32	1
			3-11133-19	103-29	1
			3-11133-20	103-38	1
			3-11133-21	103-45	1
			3-11133-22	66	1
			3-11138-8	103-40	1
			3-11138-9	103-44	1
			3-11146-11	102-20	1
			3-11146-7	102-40	1
			3-11146-8	102-19	1
			3-11147-10	102	1
			3-11147-7	102-39	1
			3-11147-8	102-22	1
			3-11147-9	102	1
			3-11257	61-23	1
			3-11330	143-48	1
			3-11351	114-5	1
			3-11370	169	1
			3-11370-4	169-57	1
			3-11388	142-37	1
			3-11388-5	142-36	1
			3-11410	142-38	1
			3-11413	142-46	1
			3-11424	142-39	1
			3-11425	142-40	1
			3-11426	140-67	2
				142-41	
			3-11477	142-13	1
			3-11579	120-22	1
			3-11579-1	120-23	1
			3-11579-2	120-24	1
			3-11579-3	120-25	1
			3-11579-5	120	4
			3-11624-8	101-46	1
			3-11624-9	101-44	1
			3-11717	33-35	36
				34-29	
			3-11720	10-32	4
			3-11720-1	10-14	4
			3-11721	3-25	4
			3-11721-1	3-40	4
			3-11733	19-7	1
			3-11738	11	NP
			3-11738-1	11	NP
			3-11745	3-18	1
			3-11745-1	3	1
			3-11745-2	3-34	2
			3-11746	3-19	1
			3-11746-1	3	1
			3-11746-2	3-35	2
			3-11760	165	2
			3-11760-1	165	2
			3-11760-2	165	2
			3-11770	72-11	1
				154-47	
			3-11770-1	72	1
				154-48	
			3-11771	72-12	1
				154-45	
			3-11771-1	72	1
				154-46	
			3-11810	101-35	1
			3-11810-1	101-12	1
			3-11811	101-34	1
			3-11811-1	101-17	1
			3-11812	101-33	1
			3-11812-1	101-21	1
			3-11813	101-32	1
			3-11813-1	101-24	1
			3-11852	66	NP
			3-11852-3	66-30	1
			3-11852-4	66-33	1
			3-11852-5	66	1
			3-11852-6	66-32	1
			3-11852-7	66-29	1
			3-11854	14-33	2
			3-11866	7-4	1
			3-11866-1	7	1
			3-11870	91-31	4
				91-38	
			3-11905	95-4	1
			3-11906	95-1	1
			3-11906-1	95-2	1
			3-11908	95-3	1
			3-11957	120-14	4
			3-11991	138-37	4
			3-11996-15	166-4	2
			3-11999-5	166	NP
			3-11999-6	166	NP
			3-12000-4	166	NP
			3-12003-1	186-18	1
			3-12003-2	186-12	1
			3-12003-4	186-13	1
			3-12004	186-13	1
			3-12018	142	NP
			3-12018-1	142-15	1
			3-12023	110	2
				116-20	
			3-12023-4	116	1
			3-12038-1	66-37	1
			3-12038-3	66	1
			3-12057	187-14	2
			3-12057-1	187-12	2
			3-12062-38	106	4
			3-12062-40	106	4
			3-12071	186-20	1
			3-12071-1	186	1
			3-12085	37-5	1
			3-12085-1	37	1
			3-12085-3	37-6	2
			3-12087	20	2
			3-12087-2	20	2
			3-12087-4	20	2
			3-12087-6	20	2
			3-12087-8	20-6	2
			3-12090	186-17	2
				186-19	
			3-12090-1	186-14	3
				187-13	
				187-15	
			3-12090-13	187	1
			3-12090-14	187	1
			3-12090-2	186-21	8
				187-17	
			3-12090-4	37-10	2
			3-12090-6	68-22	3
				68-48	

PUBLISHED BY AVIALOGS.COM

U. S. Army	U. S. Navy	British	Part Number	Figure & Index No.	Total Qty.
				68-54	
				159	
			3-12090-8	39-53	1
			3-12090-9	40-56	1
			3-12098-3	2-40	4
			3-1210-2	186-22	2
			3-1210-4	186	2
			3-12106	45-17	2
			3-12170	37-11	2
			3-12210	187-18	4
			3-12211	65	NP
			3-12211-1	65	NP
			3-12211-5	65-9	1
			3-12211-7	65-10	1
			3-12211-8	65	1
			3-12212	39-58	1
			3-12212-1	40-61	1
			3-12229	17-23	2
			3-12229-4	17-8	2
			3-12291	17-11	4
				17-33	
			3-12292	17-14	2
			3-12295	17-29	2
			3-12312	17-31	2
			3-12313	17-40	2
			3-12408	69-32	1
				184-4	
			3-12480	94-9	1
			3-12481-27	178-3	8
				178-18	
				178-34	
			3-12481-35	178-5	7
				178-20	
				178-36	
			3-12481-43	178-11	6
				178-22	
				178-38	
			3-12485	17-1	4
				17-16	
			3-12486	17-7	4
				17-22	
			3-12487	17-6	4
				17-21	
			3-12576	143-2	3
				143-21	
			3-12577	143-1	1
			3-12787-3	129	NP
			3-12788-6	184-7	2
				185-9	
			3-12921	110	NP
			3-12926	47-3	1
			3-12964	47-4	1
			3-12974	75-8	2
			3-12988	171-3	1
			3-12996	115-20	2
			3-12999	144	NP
				115	
			3-12999-2	114-30	3
				115-12	
			3-1300-5	25-17	2
			3-13001	101-13	2
			3-13006	172-30	1
			3-13009	44-2	1
			3-13370	114-9	1
			3-13371	172-9	1
			3-13374	113	NP
			3-13374-1	113-12	1
			3-13379	147-28	2
			3-13451-5	25-16	2
			3-13453-5	25-14	2
			3-13454	71-1	1
				88-8	
				89-7	
			3-13454-1	71	1
				88-9	
				89-8	
			3-13457-5	25-15	2
			3-13467-5	25-40	1
			3-13486	92-22	2
			3-13490-4	25-38	1
			3-13491-4	25-37	1
			3-13502	37	NP
			3-13503	115	NP
			3-13503-4	115-27	1
			3-13504-13	187-11	1
			3-13507	80-31	1
			3-13513	59	1
			3-13513-1	59	1
			3-13514	80-29	1
			3-13516	62-15	1
			3-13516-1	62	1
			3-13519-1	152-3	1
			3-13519-2	152-2	1
			3-13519-3	152-9	1
			3-13519-5	152-1	1
			3-13527	80-4	2
			3-13530	186-10	1
			3-13531-5	80-14	1
			3-13531-7	80	1
			3-13532	151-3	1
			3-13532-1	151	1
			3-13533-8	160-11	1
			3-13534	81-21	1
			3-13537	173-4	1
			3-13540	173-3	1
			3-13541	79-3	1
			3-13544	163-29	1
			3-13545-3	163-25	1
			3-13546-1	163-18	1
			3-13551	44	NP
			3-13551-1	44	NP
			3-13552	79	NP
			3-13555	173	1
			3-13558-8	160-10	1
			3-13564	127	NP
			3-13564-2	127-40	1
			3-13572	62-17	1
			3-13572-3	62	1
			3-13575	79-30	1
			3-13577	173-10	1
			3-13584	75-15	1
				95-14	
			3-13594	37	NP
			3-13594-1	37	NP
			3-13598	84	1
			3-13600-1	81-24	1
			3-13601	160-20	1
			3-13601-1	160-21	1
			3-13613-11	24-19	4
			3-13613-12	24-8	6
				106-36	
			3-13613-13	24-34	2
			3-13618	75-16	1
				96-13	
			3-13625	79-29	1
				96-25	
			3-13626	114	NP
			3-13627	142	NP
			3-13627-1	142-12	1
			3-13628-2	78-34	1
			3-13655	172-8	1
			3-13657	81	1
			3-13662	107-8	2
				107-13	
				136-77	
			3-13663	106-39	2
			3-13665	78	NP
			3-13665-1	78-57	1
			3-13675	147-11	1
			3-13705	59-12	1
			3-13714	78	NP
			3-13714-1	78-53	1
			3-13718	60-12	1
			3-13720	60-13	1
			3-13721	78-17	1

PUBLISHED BY AVIALOGS.COM

U. S. Army	U. S. Navy	British	Part Number	Figure & Index No.	Total Qty.
			3-13725	29-4	8
			3-13725-7	29-8	8
			3-13730	63-13	1
			3-13733	83-35	1
			3-13733-1	83-36	1
			3-13737-4	78-28	1
			3-13740-1	66	NP
			2-13740-3	66	1
			3-13742	182	14
			3-13742-2	182-50	14
			3-13742-3	182	14
			3-13742-4	182	14
			3-13750	182	2
			3-13750-2	182-15	2
			3-13750-3	182-31	2
			3-13750-4	182	2
			3-13764	192-15	4
			3-13765	192-16	4
			3-13766	192-8	4
			3-13767	192-2	8
			3-13768	192	4
			3-13769	192-12	4
			3-13791	182	32
			3-13791-1	182-10	36
				182-26	
				182-48	
			3-13796-47	178-24	3
				178-40	
			3-13796-51	178-7	2
				178-26	
			3-13796-53	178-28	1
			3-13797	149-16	6
				151-23	
			3-13802	183	2
			3-13802-1	183	2
			3-18302-4	183-20	2
			3-13802-5	183-18	2
			3-18303	183	2
			3-18303-1	183	2
			3-18303-10	183-10	2
			3-18303-11	183-12	2
			3-18303-2	183	2
			3-18303-3	183	2
			3-18303-8	183-14	2
			3-18303-9	183-16	2
			3-18306-11	106-37	2
			3-13901	25-27	1
			3-13902	25-26	1
			3-13910	143-72	1
			3-13913	33-37	2
			3-13923	143-7	2
				143-65	
			3-13930	64-11	8
				64-36	
				67-25	
			3-13932-15	67-17	2
			3-13932-23	67	NP
			3-13932-24	67	NP
			3-13832-25	67-16	1
			3-13932-26	67	1
			3-13934	143-52	1
			3-13937-1	164-22	2
			3-13937-2	164-21	2
			3-13944	127	NP
			3-14078	151-18	1
			3-14078-1	151	1
			3-14080	111	NP
			3-14217	162	1
			3-14217-1	162	1
			3-14228-2	109-4	1
			3-14230	134-10	1
			3-14232	162-19	2
			3-14232-1	162-18	2
			3-14235	162-14	1
			3-14235-1	162	1
			3-14243	92-23	2
			3-14243-1	93	2
			3-14245	106-19	2
			3-14245-1	106	2
			3-14247	106-7	2
			3-14248	106-4	2
			3-14249-4	12-3	1
				31-26	
			3-14249-5	12	1
				32-26	
			3-14535	123-12	2
			3-14536-2	123-2	1
			3-14536-3	123-11	1
			3-14537	123-5	1
			3-14537-2	123-7	1
			3-14654	174-17	2
				175-19	
			3-14658	25-42	6
			3-14660	162-28	2
			3-14664	161-19	4
				162-26	
			3-14665	161-18	1
			3-14665-1	161	1
			3-14667	40	1
			3-14669	41-17	1
			3-14671	42-16	1
			3-14673	40-54	1
			3-14679	162-25	1
			3-14679-1	162	1
			3-14681-1	39	2
				40	
			3-14681-2	39	2
				40	
			3-14683	161-21	2
			3-14686	110-12	4
				110-30	
				114-2	
				115-9	
			3-14853	123-6	4
			3-14902	176-9	36
			3-14908-2	182-7	72
				182-23	
				182-45	
			3-14911	181	48
			3-14911-2	181-9	48
				181-18	
				181-27	
				181-36	
				181-45	
				181-54	
			3-14912-2	176-18	40
				182-57	
			3-14928-1	176-12	4
			3-14933	28-4	12
			3-14934	121-61	1
			3-14953	172-44	1
			3-14954	172-38	1
			3-14985	28-5	12
			3-14987	81-12	1
			3-14988-2	127	NP
			3-14997	14-4	3
			3-14997-1	14	3
			3-15100	181	32
			3-15101	176	4
			3-15101-2	176	4
			3-15101-3	176-14	4
			3-15101-7	176-13	4
			3-15101-8	176	4
			3-15102	176	72
				182	
			3-15105	127	1
			3-15106	127	1
			3-15109-2	155-4	3
			3-15109-3	155	2
			3-15117	174-13	1
			3-15118	168-24	2
			3-15122	20-10	10
			3-15124	168-25	2
			3-15131	115-3	1
			3-15137	115	NP
			3-15152	163-3	1

PUBLISHED BY AVIALOGS.COM

U. S. Army	U. S. Navy	British	Part Number	Figure & Index No.	Total Qty.
			3-15152-1	163-4	1
			3-15159-5	128-5	1
			3-15159-6	128-7	1
			3-15165	127	NP
			3-15173	141-80	2
			3-15184	88-10	NP
				89-17	
				193-4	
				194-3	
			3-15185	87-6	NP
				98	
				195-2	
			3-15190	172-45	1
			3-15190-1	172-46	1
			3-15192	111	2
			3-15193	106	4
			3-15193-1	106	4
			3-15195	98	NP
			3-15520-2	102-10	4
			3-15521-10	159-15	4
			3-16112-6	106	1
			3-16114-3	106	2
			3-16114-4	106	2
			3-16114-5	106-29	1
			3-16114-6	106	1
			3-16120	78-7	1
			3-16147	163-48	1
			3-16147-1	163-49	1
			3-16151	163-46	1
			3-16152	163-45	1
			3-16160	65-37	2
			3-16164	65	NP
			3-16164-1	65	NP
			3-16164-2	65	1
			3-16164-3	65	1
			3-16171	108-40	1
			3-16445-2	159-11	1
			3-16456-4	45-4	4
				46-12	
			3-16478	106-35	2
			3-16601	157-13	1
			3-16696	110	3
				111	
				114	
			3-16704	65-43	1
			3-16708-2	108	2
			3-16901	60-16	1
			3-16917	177-10	1
			3-16919-5	45-5	4
				46-13	
			3-16922	190-9	1
			3-16923	191-10	1
			3-16928	39	4
				40	
				41-29	
				42-26	
			3-16933-1	85-8	3
			3-16934	85	1
			3-16944	159-22	2
			3-16946	111-51	1
			3-16947	63-11	1
			3-16950	177	6
				184-12	
				185-13	
			3-16953	113-8	1
			3-16969	36-13	2
			3-16969-1	36	2
			3-16971	36-14	4
			3-16975	36-16	2
			3-16976	63-9	1
			3-16978	63-5	1
			3-16979	82-39	2
			3-16985	36-18	1
			3-16985-1	36	1
			3-16986	36-19	2
			3-16987-4	90-9	1
			3-16989	36-20	4
			3-16989-1	36	4
			3-17015	155-39	1
			3-17396-47	178-9	1
			3-18044	157-14	2
			3-18209	65-44	6
			3-18216	108-44	1
			3-18228	108-43	1
			3-18261	59-39	1
			3-18262	59-34	1
			3-18263	59-33	1
			3-18264-1	59-35	1
			3-18266	80-35	1
			3-18266-1	80-36	1
			3-18269	80-37	1
			3-18279	63	NP
			3-18279-1	63-12	1
			3-18288	104-12	1
			3-18502	33-10	4
				34-10	
			3-18518	177-12	1
			3-18518-2	177	2
			3-18518-3	177	2
			3-18541	127	1
			3-18549	109-18	1
			3-18559-3	121	4
			3-18572	14-28	1
			3-18572-1	14	1
			3-18924	108-41	1
			3-18925	65-51	2
			3-18926	110-34	1
			3-18943	65-49	2
			3-18944	108-39	1
			3-19010	90-8	1
			3-19026	83-28	1
			3-19030	24-12	4
				24-23	
			3-19041	115	1
			3-19046	24-11	4
				24-22	
			3-19058	70-13	2
				163-38	
			3-19251	131	NP
			3-19251-1	131-17	1
			3-19267	166-50	2
			3-19275	19-35	24
				20-28	
				97-2	
			3-19279	134	NP
			3-19279-1	134	1
			3-19280	147-37	1
			3-19288	46-7	1
			3-19288-1	46	1
			3-19290	76-32	4
			3-19290-1	76-49	4
			3-19291	147-59	1
			3-19509	107-9	1
			3-19510	121-60	1
			3-19530	113	NP
			3-19542	141-81	1
			3-19542-1	141-82	1
			3-19577	147-67	1
			3-19578	147-66	1
			3-19578-1	147-70	1
			3-19579	147-60	1
			3-19580	147-61	1
			3-19591	158-17	2
			3-19593	21-38	17
				21-55	
				22-26	
			3-19597	158-26	1
			3-19597-1	158-14	1
			3-19598	158-15	1
			3-19599	113	NP
			3-19603	158-19	1
			3-19612	158-18	1

PUBLISHED BY AVIALOGS.COM

U. S. Army	U. S. Navy	British	Part Number	Figure & Index No.	Total Qty.
			3-19613	158-27	1
			3-19617	158-24	1
			3-19627-10	111	1
			3-19627-6	111-74	1
			3-19628	130-33	1
			3-19628-11	130-58	1
			3-19628-6	130-57	1
			3-19629	130-34	1
			3-19635	158-11	2
			3-19636	158-9	1
			3-19636-1	158-10	1
			3-19646	153-18	1
			3-19647	153-19	1
			3-19649	153-17	2
			3-19753	170-12	2
			3-19860-2	153-13	2
			3-19861	153	1
			3-19862	153-11	1
			3-19875	158-35	1
			3-19877	158-34	1
			3-19951	153-3	1
			3-19973	191	1
			3-19982	170-13	2
			3-19982-1	170-14	2
			3-19982-2	170-15	2
			3-19988	38-11	16
				38-17	
			3-19996	146-16	2
			3-19996-2	146	2
			3-20110	170-24	2
			3-20118	58-14	1
			3-20128	110	NP
			3-20128-1	110-22	1
			3-20139-11	134-20	4
			3-20139-12	134-15	12
			3-20139-13	134-30	2
			3-20139-14	134-25	12
				135-38	
			3-20139-15	134-32	20
				134-35	
			3-20139-16	134-31	2
			3-20139-17	134-16	8
			3-20139-18	134-21	2
			3-20139-19	134-22	2
			3-20139-20	134-17	4
			3-20213-2	140-38	1
			3-20228	110	NP
			3-20228-1	110-7	1
			3-20235	21-28	1
			3-20235-1	21	1
			3-20236	21-15	1
			3-20236-1	21	1
			3-20238	83-4	1
			3-20245	108	NP
			3-20398	185-1	1
			3-20414-1	185-5	3
			3-20422	37-9	2
			3-20433	168-37	2
			3-20464	80-16	1
			3-20464-1	80-17	1
			3-20466	80-15	1
			3-20468	80-22	1
			3-20476	80-27	1
			3-20532	111-62	1
			3-20562	146-28	16
				147-2	
				149-17	
				150-28	
				151-27	
			3-20639	131	NP
			3-20650	142-4	1
			3-20651	142-2	1
			3-20689	130	NP
			3-20722	145-14	1
			3-20740	21-6	1
			3-20740-1	21	1
			3-20742	21-60	2
			3-20745	35-6	12
			3-20745-48	22-22	4
			3-20750	78-25	2
			3-20754	115	NP
			3-20755-5	106	1
			3-20757	24-35	2
			3-20757-1	24	2
			3-20757-2	24	2
			3-20757-3	24	2
			3-20757-7	24-13	4
				24-24	
			3-20783	45-26	2
			3-20792	154-34	2
				156-6	
			3-20828	78-37	1
			3-20831	74-12	2
			3-20848	147-19	5
				150-18	
			3-21034-3	91	2
			3-21110	66-8	1
			3-21391	43-20	2
			3-21391-1	43-7	2
			3-21391-4	43	2
			3-21391-5	43	2
			3-21395-1	114	NP
			3-21396	150-26	12
				151-24	
			3-21396-1	146-27	8
				150-27	
				151-25	
			3-21406	128-17	10
			3-21406-1	128-18	2
			3-21422	43-3	1
			3-21422-1	43	1
			3-21428	84-16	1
			3-21433	127-5	1
			3-21442-11	56-11	2
			3-21872	78	NP
			3-21881	147-20	1
			3-21881-2	147-21	1
			3-21907	151-29	1
			3-21907-1	151-30	1
			3-21910	127	NP
			3-21934-1	159	1
			3-21934-101	159-16	1
			3-21935	175-15	1
			3-21937	168-30	2
			3-22243	21-1	2
			3-22244	21-21	2
			3-22245	21-65	4
			3-22271	102-42	1
			3-22272-1	102-14	1
			3-22289	21-23	1
			3-22289-1	21	1
			3-22295	44-29	1
			3-22419	30	3
			3-22420	30-15	4
			3-22434	93-22	4
			3-22442	67-7	2
			3-22455	53-21	2
			3-22475	144-10	1
			3-22479	144-18	1
			3-22484	140-59	1
			3-22487	57-51	1
			3-22487-1	57-47	1
			3-22490	57-17	1
			3-22490-1	57	1
			3-22492	139-50	1
			3-22495	144-14	1
			3-23080	6	1
			3-23080-1	6	1
			3-23087	141-76	1
			3-23087-1	141-77	1
			3-23094	141-73	1
			3-23098	154-35	2
				156-7	
			3-23111	141-65	1
			3-23171	53-23	1

PUBLISHED BY AVIALOGS.COM

U. S. Army	U. S. Navy	British	Part Number	Figure & Index No.	Total Qty.
			3-23172	53-27	1
			3-23410	140-16	1
			3-23417	144-13	1
			3-23419	144	1
			3-23422-8	140-70	1
			3-23422-9	140-69	1
			3-23423-5	140-68	1
			3-23438	21-50	8
			3-23470	140-8	1
			3-23504	140-5	1
			3-23507	140-3	1
			3-23509	140-10	1
			3-23543	140-25	1
			3-23547	67-9	2
			3-23549	140-23	1
			3-23550	140-29	1
			3-23551	140-31	1
			3-23558	69-54	1
				184-5	
				185-7	
			3-23593	57-22	2
			3-23595	57-32	2
				57-48	
			3-23596	56-3	8
				56-12	
			3-23801	144-17	1
			3-23818	57-46	1
			3-23825	144-15	1
			3-23846-1	140-37	1
			3-23881	53-68	8
			3-23883	57-31	1
			3-23884	57-30	1
			3-23885	57-36	1
			3-23975	102-34	1
			3-24415	5-8	60
			3-24424	154	2
			3-24424-1	157	2
			3-24426	154-23	1
			3-24426-1	154-24	1
			3-24429	21-53	6
				23	
			3-24441	157-26	1
			3-24487	140-47	1
			3-24498-2	172-41	2
			3-24498-502	169-17	10
				169-45	
				169-56	
			3-24503	140-48	1
			3-24503-1	140-46	1
			3-24506	111-67	4
				113-20	
				116-14	
				118-9	
			3-24532	30-14	1
			3-24536	111-55	1
			3-24561	114	NP
			3-24592	145-5	1
			3-24611	141-52	1
			3-24612	141-48	1
			3-24613	141-42	1
			3-24626	23	2
			3-24632	21	4
			3-24636	141-25	1
			3-24642	23	2
			3-24647	102	1
			3-24648	102	1
			3-24684	91-7	1
			3-24687	102	1
			3-24687-1	101	1
			3-25127	91-15	1
			3-25127-1	91	1
			3-25153	165	2
			3-25153-1	165	2
			3-25153-2	165	2
			3-25166	21	2
			3-25166-7	22-9	1
			3-25167	21	2
			3-25168	21	12
				22-14	
			3-25169	21	5
				22-25	
			3-25169-1	22-13	1
			3-25170	21	3
				22-49	
			3-25171	21	3
				22-45	
			3-25189	172	1
			3-25189-1	172	1
			3-25221-7	22-1	1
			3-25257	26-10	1
			3-25297	23	2
			3-25310	146-43	2
			3-25383	33-27	32
				34-32	
			3-25388	33	2
			3-25389	43-6	4
				43-19	
			3-25389-6	43	2
			3-25390	43	4
			3-26003	146-41	4
			3-26004	146-22	1
			3-26005	146-20	1
			3-26006	65-16	2
				65-28	
			3-26013	140-33	1
			3-26023	146-29	1
			3-26023-1	146-30	1
			3-26029	146-21	2
			3-26047	146-26	4
			3-26048	166-45	2
			3-26071	47-11	2
			3-26079	150-11	2
			3-26086	127-36	4
				127-37	
			3-26118	150-13	4
				150-37	
			3-26172	166-46	2
			3-26181	164	4
			3-26499-1	53-77	2
			3-27000-1	150	2
			3-27011	150-16	2
			3-27012	150-17	3
				150-40	
			3-27013	79-14	4
			3-27014	141-43	1
			3-27139	135-60	2
			3-27147	21-51	3
				22-23	
			3-27807	165	2
			3-27807-1	165	2
			3-27814	73-13	2
			3-27816	73-15	1
			3-27923	79-10	2
			3-27935	110	2
				111	
			3-27935-1	111	3
			3-27936	181	28
			3-27965	166-58	2
			3-27987	127-57	2
				127-59	
			3-28707	22-23	2
			3-28710	22-52	1
			3-28720	166-47	2
			3-28769	147-45	1
			3-28769-1	147-46	3
			3-28790	147-90	2
			3-28796	147-47	3
			3-28797	147-50	3
			3-28805	147-83	1
			3-28806	147	1
			3-28816	45-14	2
			3-28868	147	1
			3-28869	147-85	1
			3-28870	147-86	1
			3-28871	147-87	1
			3-28883	44	5
				45	

PUBLISHED BY AVIALOGS.COM

U. S. Army	U. S. Navy	British	Part Number	Figure & Index No.	Total Qty.
			3-29449	166-42	6
			3-29469	22-21	2
			3-29904	64-40	2
				76-59	
			3-29905	64-47	2
				76-64	
			3-29906	76-61	1
			3-29907	114	NP
			3-29907-1	114-32	2
			3-29907-2	114	2
			3-29934	108-35	1
			3-29969	163-71	1
			3-30111	147-88	1
			3-30187	146-18	2
			3-31104	43-4	1
			3-31105	43-9	4
			3-31181	146-10	12
			3-31188	29-10	8
			3-32102	146-14	4
			3-32184	91-12	2
			3-32442	160-6	2
			3-32557	150	2
			3-32557-1	150	4
			3-32568	130-44	1
			3-32588	177	1
			3-32815	150-43	2
			3-32834	150-45	2
			3-33728	119	1
			3-34255	150-41	2
			3-5369	92-3	4
			3-6475-2	73-3	2
			3-6475-3	73-2	2
			3-6475-7	73	1
			3-6481	7-1	2
			3-6481-2	7-2	2
			3-6481-4	7-3	2
			3-6738	160-29	2
			3-6738-5	73-47	2
			3-6738-6	73-48	3
			3-7022	73	1
			3-7022-1	73-49	1
			3-7194-7	68-64	4
				69-56	
			3-7366	68-46	1
			3-7366-1	68-47	1
			3-7833	166-18	4
			3-7838	68-27	1
			3-7838-1	68-28	1
			3-7838-2	68-29	1
			3-7838-3	68	2
				69	
			3-7838-4	69	1
			3-7838-6	69	1
			3-7838-7	69-9	1
			3-7934-1	155	5
			3-7934-2	155-9	5
			3-7941	72-3	4
			3-7941-6	72-9	1
			3-7942	72-4	2
			3-7942-1	72-6	1
			3-7942-10	72-5	1
			3-7942-2	72-7	2
			3-7943	72-8	2
			3-8010-12	83-19	1
			3-8202-100	186-11	3
				187-10	
			3-8202-90	38-59	1
			3-8202-91	40-62	1
			3-8202-99	186-15	1
			3-8728-6	113	1
			3-8752-1	19-6	1
			3-8760	2-17	2
			3-8761	2-18	2
			3-9164	167-40	2
			3-9287	24-32	6
			3-9288	168	2
			3-9288-1	168-12	2
			3-9288-2	168-13	2
			3-9351	24-10	10
				24-21	
				24-36	
			3-9584-3	93-15	4
			3-9584-4	93-12	2
				121-84	
				199-11	
			3-9584-5	93	2
				121-85	
				199-12	
			3-9774-7	92-19	2
			3-9774-8	92-20	2
			3-9775	160-31	6
			3-9778	155	2
			3-9778-1	155-28	3
			3-9799-9	73-44	1
			3A385	82-45	2
			3F142	82-53	2
			30KB1250	131-20	2
			30126	148	1
			31-1176-2	44	2
			31-1176-3	44	1
			31-1177-2	44	2
			31-1177-3	44	1
			3112A	107-6	1
			320-18	126-17	2
			320-22	126-21	2
			320-23	126-22	2
			320-24	126-20	2
			320-37	126-9	1
			3215J	112-23	1
			33A6182	161	43
				161-7	
				162	
				162-9	
			33A6182-1	161	43
				161-8	
				162	
				162-8	
			33A6186	161	43
				162	
				162-10	
			33A6186-1	161-9	43
				162	
				162-11	
			33D5226	160	40
				160-36	
				161	
				161-30	
				162	
				162-39	
			3374Y	44-28	1
			34A1766D2	116	8
			34D5889	130	3
			34G1646	83-2	4
				83-25	
				83-34	
				84-22	
			34306	172-24	1
			34478	172	1
			349-20	126-27	1
			35A2276	127-12	7
				127-13	
				127-25	
				127-46	
			35A2277	127	11
				127-27	
				127-31	
				127-33	
			35A2282	127-26	1
			35A3896	147-3	1
			35A3897	147-6	1
			35A3898	147-4	1
			35A3899	147-5	1
			35B3441	160-27	2
			35G3422	160-32	1
			35G3422-1	160-33	1
			35407	110-26	1

PUBLISHED BY AVIALOGS.COM

U. S. Army	U. S. Navy	British	Part Number	Figure & Index No.	Total Qty.
			36A2108	80-39	1
			36B3422	115-21	3
			36B3423	115-22	1
			36B5856	130-42	1
			36C4441	160-38	1
			36D5854	130-40	1
			36E4442	160-39	1
			360B	78-45	2
				78-52	
			362A	172	1
			363-1032	57	77
			368	172-25	1
			37A1736	135-44	4
			37A3528	30-2	4
			37A4527	114-7	1
			37A5430	51-1	8
			37A5751	135-31	4
				135-41	
			37A5810	149-11	2
			37A5811	149-12	2
			37A6330	135-45	2
			37B2675	150-14	1
			37B2675-1	147-16	4
				150	
				151	
				151-5	
			37B4962-1	3-2	1
			37B4962-2	3	1
			37B4962-3	3-3	1
			37B4962-4	3	1
			37B4962-7	114-29	3
				115-11	
			37B4983	111-14	4
				113-13	
				115-15	
			37B6535	13-46	4
				15	
				51-21	
			37D4865	44-23	1
			37D4865-1	115-18	2
			3700	82-48	2
			38A1762	110-20	9
				111-4	
				111-11	
				111-18	
				111-35	
			38A3408	135-43	4
			38A6133	107-10	2
				136-53	
				206-3	
			38A6134	107	1
			38A6135	107	1
			38A6136	107	1
			38B6205-1	135-30	4
				135-40	
			380B	70-9	9
				70-28	
				70-46	
				70-59	
				78-30	
			380E	73	1
			385-20-5	106-50	2
			39A2511	111-68	4
				113-19	
				116-15	
				118-10	
			39A2512	112-22	3
				116-8	
			39A3906-2	110-14	61
				116	
			39B1024-6	48	8
			39B1024-8	48	4
				121	
			39B223-12	167-28	2
			39B226-12	167-25	2
			39B3480-414	108-14	1
			39B3480-816	121-64	1
			39B3481-1016	107-11	1
			39B3481-414	107-5	13
				108-13	
				108-27	
			39B3905L	149-19	1
			39B3905R	149	1
			39B846B4	107-4	1
			39G1030-12W24	191	1
			39G1030-12W27	191-3	1
			39G1030-12W30	190-3	2
			39G1030-8-16	54-37	1
			39G1030-8-21	48	2
			396-5	126-26	1
			4-1640-18-21D12	55-3	1
			4-1743-2P26	137-4	1
			4-1743-3D1	137-5	1
			4-2243-1D31	125-25	1
			4-3041-98SS11	125-31	1
			4-3286-10	147	1
			4-805	18-2	2
			4CT-SS	40-44	1
			4CT45SS	39-21	3
				41-27	
				42-24	
			4G8G15D	177-3	4
			4G8G23D	177	4
			4G8G23G1	177	4
			4T0KD	159-6	1
			40	91	2
			40A5553	112-9	1
			40A7419-1	116-9	2
			40B629-12	167-27	6
			40B629-6-024	124-9	3
			40B629-7-018	192-6	16
			40B629-9-026	124-16	2
			40B887-014C022-8	107-3	1
			40D8445-2	111-31	4
			40G5318	160-41	1
			401-4A	105-2	1
				198-15	
			401561	121-69	1
				199-5	
			406862	119-2	1
			407155	119-8	1
			407156	119-4	1
			407164	119-7	1
			407169	119-6	1
			407172	119-9	1
			407212	119-5	1
			407214	119-13	1
			407215	119-15	1
			407216	119-14	1
			407217A	119-12	1
			407229A	98	3
			407229B	98	1
			407969A	118-16	2
			408101	118-23	2
			408188	118-20	2
			408250	118-17	2
			408263	118-19	2
			41-1042-34-3	55	2
			41-1066-64-108	168-22	4
			41-1150	132-4	17
				132-12	
				132-21	
				132-27	
				132-32	
				132-40	
				132-49	
				132-61	
				132-67	
			41-1150-1	132-54	1
			41-1216	92-31	4
			41-1395-21	20-46	10

PUBLISHED BY AVIALOGS.COM

U. S. Army	U. S. Navy	British	Part Number	Figure & Index No.	Total Qty.
			41-1434	20-23	11
			41-1434-1	19-32	1
			41-1435	19-27	13
				20-19	
				97-15	
			41-1436	20-22	10
			41-1436-1	97-7	1
			41-1436-2	19-31	1
			41-1439	19-24	24
				20-16	
				97-10	
			41-158	130-22	6
				132-22	
				132-33	
				132-39	
				132-48	
			41-158-1	132-15	4
			41-16	164-4	2
			41-1831-3	60-17	8
			41-239-11	159	2
			41-239-13	159-12	1
			41-239-14	159	1
			41-239-15	159	1
			41-2476	71-14	3
				144-19	
			41-2476-3	144	NP
			41-2567	167-23	2
			41-2568	167-29	2
			41-2569	167-38	2
			41-2636-14	167-12	10
			41-2636-15	167-13	8
			41-2636-16	167-9	8
			41-2636-17	167-10	8
			41-2636-18	167-11	6
			41-2789	18-3	2
			41-2801	19-22	14
				20-25	
				97-12	
			41-2817	168	4
			41-2817-1	168-3	2
			41-2817-2	168-4	2
			41-2834-1	91-17	2
			41-293	83-14	1
			41-3018-253-8	12	24
			41-314	83-38	1
			41-3412	171-26	1
			41-3413	171-24	1
			41-353-15-8	70-31	1
			41-353-20-7	70-62	1
			41-3555	12-40	6
			41-3560	96-7	2
				96-23	
			41-3572	12-30	18
			41-3703	13-12	2
			41-3711	93-16	4
			41-3712-1	93-17	4
			41-3713-1	93-18	4
			41-3722	93-24	4
			41-3724	93-14	4
			41-3727-3	171-4	1
			41-3824-1	171-7	1
			41-3826-1	13-27	2
			41-3826-2	13-28	2
			41-3831	13-15	14
				13-41	
				15-24	
			41-3840	13-38	12
				15-23	
			41-4023-3-4	136-38	1
			41-4023-8-10	42-11	1
			41-4023-8-22	41-10	1
			41-4069	143-18	2
			41-4103-2	112	NP
			41-4103-3	112-6	1
			41-4103-4	112	1
			41-4146-1	52-23	4
			41-4180	160-28	2
			41-4181	160-30	6
			41-4188	72-22	8
			41-4188-1	72-16	4
			41-4188-2	72-30	2
			41-4188-5	72	4
			41-4190	72-19	6
			41-4196	72-15	2
			41-4198	39-27	16
				40-20	
			41-4220	20-43	16
				169-22	
				169-32	
			41-4220-1	97	12
				169-19	
				169-48	
				169-50	
			41-4231	136-41	1
			41-4231-3	136-42	1
			41-4234	136-40	1
			41-4284	102-26	1
			41-4284-1	102-29	2
			41-4286-1	102-33	1
			41-4293	102-2	1
			41-43	169-18	8
				169-24	
				169-47	
				169-51	
			41-43-2	169-46	2
			41-4483	19-23	24
				20-15	
				97-11	
			41-4484	20-14	10
			41-4498	19-11	1
			41-4543-5	93-3	2
			41-4544	93-4	1
			41-4545	160	6
			41-4600	19-9	1
			41-4601	19-20	26
				20-12	
				97-14	
			41-4602-1	19-21	26
				20-13	
				97-13	
			41-4614-29-18	13-11	4
			41-4633	20	10
			41-4638	20-7	10
			41-4691-1	92-26	4
			41-4778	168-2	4
			41-484-6-1	164-16	2
			41-484-6-6	164-12	2
			41-4888-14-7	64-7	14
				64-32	
				67-31	
			41-4931	143-15	1
			41-4971	136-65	1
			41-4972	136-67	1
			41-5035-17-2	97	2
			41-5035-21-15	20-41	1
			41-5035-24-8	20	1
			41-5035-35-10	97-27	2
			41-5035-50-31	20	1
			41-5035-51-1	20-38	1
			41-5035-53-13	20-37	1
			41-5035-53-17	20	1
			41-5035-55-25	20-40	1
			41-5035-61-16	20-39	1
			41-5035-61-19	20	1
			41-5123	44-10	4
				45-18	
			41-5124	44	2
			41-5195	159	1
			41-5456	73-42	1
			41-5533-0-39	93	48
			41-5580	73-43	2

PUBLISHED BY AVIALOGS.COM

U. S. Army	U. S. Navy	British	Part Number	Figure & Index No.	Total Qty.
			41-5584	173-7	1
			41-5613	19-10	1
			41-5647	84-15	4
			41-5652-5	109-6	2
			41-5699	96-20	1
			41-5881	2-10	4
			41-5881-1	2-11	4
			41-5899	83-17	1
			41-5918	20	NP
				97	
			41-5918-1	20-47	4
				97-25	
			41-5951-40-13	152-13	2
			41-5972	95-9	2
			41-6109	8-1	2
			41-6109-1	8-2	2
			41-6109-2	8-3	2
			41-6109-3	8-4	2
			41-6109-4	8-5	2
			41-6109-5	8-6	2
			41-6109-6	8-7	2
			41-6109-7	8-8	2
			41-6109-8	8-9	2
			41-6109-9	8-10	2
			41-6187-1	93-25	4
			41-6608	154-21	1
			41-6659	155-23	10
			41-67	160-14	4
			41-671	166-32	8
			41-68	160-13	4
			41-6813	116	1
			41-6818	102-56	1
			41-6825	155-27	5
			41-6826	155-22	5
			41-688-3	50-16	5
				61-19	
				61-27	
			41-6975-24-9	111	4
			41-7074-1	44	2
			41-7081-1	95-7	2
			41-7085-72-33	182-53	28
			41-72	160-23	1
			41-7288	113	6
			41-7288-2	115	3
			41-7297	97	1
			41-7297-1	97-18	1
			41-7297-2	97-19	1
			41-75-2	160	8
			41-7511	130	NP
			41-7584	155	3
			41-7584-1	155	2
			41-7584-2	155-19	5
			41-7584-3	155-20	5
			41-7592	132-38	2
				132-68	
			41-76-1	160-22	1
			41-7654-2	103-11	1
			41-7703	82-26	2
			41-7710	192-14	8
			41-778	84-10	4
			41-78	160-24	1
			41-7804-1	136-37	1
			41-7811	154-43	12
			41-782	169-58	1
			41-7915-1	103-33	1
			41-7915-2	103-34	1
			41-7942	69-26	1
			41-7943	69-30	2
				69-45	
			41-7944	69-28	2
				69-43	
			41-7945	69-33	2
				69-47	
			41-7946	69-29	2
				69-44	
			41-7949	154-31	1
			41-7952-1	142-24	1
			41-7952-7	142-29	1
			41-7953	102-16	1
			41-7953-1	101-30	1
			41-7953-4	101	1
			41-7956	154-37	2
				156-9	
			41-7964	101-52	1
			41-7979	142-27	1
			41-7982	142-19	2
			41-7983	142-21	2
			41-7985	142-26	1
			41-7995	154-28	2
				156-31	
			41-8064	143-70	1
			41-8065	143-69	1
			41-8074	103-4	1
			41-8126	102-48	1
			41-8129-3	102-13	1
			41-8180	82-19	1
			41-8180-1	82	1
			41-8199-1	167-44	1
			41-8216	156-10	1
			41-8217-1	156-16	1
			41-8261	33-22	16
				34-21	
			41-8265	35-13	8
				35-18	
			41-8267	155-7	10
			41-8267-1	156-26	1
			41-8374	33-25	64
				34-20	
			41-8385	142-28	2
			41-8395	140-49	2
				142-30	
			41-8395-6	140-50	1
			41-8428	114-6	1
			41-8435	33-31	6
			41-8448	34-33	2
			41-8453	120-29	4
			41-8461	33-32	4
			41-8510-1	104-25	1
			41-8565	139-51	2
			41-8573	115-23	2
			41-8700-3	102-8	8
			41-8700-4	101-19	6
			41-8702	92-6	4
			41-8752	36-6	4
			41-8753	34-3	2
			41-8755	36-4	8
			41-8756	36	8
			41-8805	36-7	4
			41-8806	36-10	4
			41-8826	36-9	4
			41-8835	114	1
			41-8959-1	136-30	1
			41-9013	34-4	16
			41-9046-1	82-41	2
			41-9048	120-33	1
			41-9048-1	120	1
			41-9048-2	120	1
			41-9048-3	120	1
			41-9055	120-26	4
			41-9108	210-30	4
			41-9111	120-28	4
			41-9113	120	8
			41-9114	120-31	4
			41-9115	120-32	8
			41-9117-1	120-27	4
			41-9163	143-42	4
			41-9268-5-16	44-5	1
			41-9284	41	3
				42	
			41-9290-3	121-21	8
				136-47	
			41-9290-4	136-23	2
			41-9338	91-42	4
			41-9384	93-20	4
			41-9404-1	18-10	4
			41-9411	93-5	3

PUBLISHED BY AVIALOGS.COM

U. S. Army	U. S. Navy	British	Part Number	Figure & Index No.	Total Qty.
				93-10	
			41-9466	70	NP
			41-9466-2	70-17	2
				70-35	
			41-9501-32-17	93-9	1
			41-9505	44	1
			41-9507	2-2	2
			41-9514	94-11	2
				103-19	
			41-9541	13-13	2
			41-9541-1	13-31	2
			41-9542	15-21	4
			41-9542-1	13-39	6
				15-22	
			41-9542-2	13-40	2
			41-9576	11-12	2
			41-9606	92-25	6
			41-9623-12	167-4	6
			41-9623-13	167-7	4
			41-9623-14	167-6	4
			41-9623-15	5	4
			41-9656	11-13	2
			41-9667	3-41	2
			41-9667-1	3-42	2
			41-9669-2	3-32	2
			41-9670-2	3-33	2
			41-9728	102-4	1
			41-9728-1	102-47	1
			41-9730	102-30	1
			41-9730-1	102-36	1
			41-9730-2	102-38	1
			41-9730-3	102-27	1
			41-9731	102-35	1
			41-9731-1	102-31	1
			41-9731-2	102-28	1
			41-9731-3	102-37	1
			41-9732-14	102-23	1
			41-9732-16	102-15	4
			41-9732-30	102-18	1
			41-9732-32	101	1
			41-9732-4	101-14	2
			41-9735	102-17	1
			41-9736	101-29	2
			41-9736-1	101-31	1
			41-9742	69-41	1
			41-9755	72-20	4
			41-9755-1	72-26	2
			41-9774	103-21	1
			41-9774-1	94-10	2
			41-9774-2	103-22	1
			41-9779	73-31	4
			41-9792-1	13-8	2
			41-9792-2	13-9	2
			41-9797	72-24	6
			41-9798	72-18	4
			41-9798-1	72-29	2
			41-9801	44-4	1
			41-9807	171-27	1
			41-9808	91-34	8
				91-40	
			41-9811	91-32	4
				41-41	
			41-9817	91-26	4
			41-9822	103-35	1
			41-9831-272	101	1
			41-9831-43	101-26	2
			41-9831-46	101-20	2
			41-9831-53	101-16	2
			41-9831-55	101-23	2
			41-9863	106	4
			41-9868	154-40	4
			41-9882	154-22	1
			41-9892	155-5	4
			41-9902	84-12	2
			41-9902-1	84-13	2
			41-9908	159-5	1
			41-9916	135-51	2
			41-9960	93	1
			41-9961	83	1
			41-9962	136-64	1
			41-9963-1	83-22	1
			41-9974	94	1
			41-9974-1	94-25	1
			41-9981	111-64	2
				118-4	
			41-9981-1	110-1	2
				116-21	
			41-9992	73-11	1
			41-9992-1	73-12	1
			41-9998	72-10	2
			41A10712	153-4	2
			41B10395	159-21	2
			41B2679	147-75	1
			41E4555	160-37	2
				162-40	
			41G1742	160-34	12
				161-29	
				162-38	
			41G1742-1	160-35	12
				161	
				162	
			41K3650	149-10	2
			42A3524	110-35	1
			42A6950	134-9	1
			42A8317	146-6	2
			42B3581	28-12	9
				38-3	
				138-33	
			42B3593-1	109-39	10
				111-65	
				112-25	
				116-7	
				116-31	
				118-5	
			42B3593-2	109-40	22
				115-25	
				116-6	
				116-32	
				117-8	
				133-13	
				133-24	
				133-29	
				133-33	
				133-36	
				133-41	
				133-46	
				133-51	
			42B3593-3	109-41	5
				117-7	
			42B3748	111-27	1
			42B498-12	167-24	2
			42B498-14-400-118	173-18	1
			42B6927	111-28	1
			42B8318	146-5	4
				150-3	
			42D19090	147-79	3
				150-10	
			42D19277-5-14	107-1	4
			42D4499	110-40	1
			42D6443	160-40	1
			43-10760-408	82-3	1
			43-10760-409	82	1
			43-11181	82-9	1
			43-11344-2	11	NP
				47	
			43-11344-3	47-22	2
			43-11344-400	11-3	NP
				47	
			43-11471	100-11	1
			43-11472	100-12	1
			43-11520-402	110-10	2
				110-28	
			43-11714-10	30	1
			43-11714-11	30	1
			43-11714-13	30	1
			43-11714-14	30	1

PUBLISHED BY AVIALOGS.COM

U. S. Army	U. S. Navy	British	Part Number	Figure & Index No.	Total Qty.
			43-11714-15	30	1
			43-11714-16	30	1
			43-11714-5	23-37	NP
				26-3	
				30	
			43-11714-6	23	NP
				27-3	
			43-11715-6	30	NP
			43-11993	75	1
				95-18	
			43-12785	129-2	1
			43-6988	169-34	1
			43-6988-1	169	1
			43-7806	92	4
			43-7853-400	156-3	1
			43-7853-401	156	1
			43-7863-1	156-24	1
			43-7863-2	154	1
			43-7863-400	156-33	1
			43-7870	156-27	1
			43-7935-400	155-6	3
			43-7935-401	155	2
			43-8148	159	NP
			43-8148-400	159-2	1
			43-8754	20	10
			43-8754-1	20-30	10
			43-8754-2	20-31	20
			43-8756	20-20	10
			43-9165	167-22	2
			43-9588	13	1
			43-9588-1	13	1
			43-9588-2	13-24	1
			43-9588-3	13	1
			43-9588-400	13-25	2
			43A10876	146-3	2
			43A10877	146-4	2
			43A6953L	146	5
				147	
				150-35	
				151	
			43A6953R	146-15	5
				147	
				150	
				151	
			43B11200	161-17	42
				162-24	
			43B15240	150-2	2
			43B2237-12	167-26	4
			43D10157	160	32
				161	
				162	
			43D2475-4-140	107-2	2
			43D2475-6-330	48-29	8
			43D2475-8D160	54-37	2
				121-67	
			43D2475-8D210	48-4	2
			43G10872	146	2
			43G19840L	160	12
				161	
				162	
			43G19840R	160	12
				161	
				162	
			44B12175	147-78	5
				146-8	
				150-5	
			44B18573	111-60	2
			44B18574	111-61	2
			44B25259	145-9	11
				147-84	
				148-6	
				150	
				150-36	
			44B6540	19	36
				20	
				62	
				63-10	
				97	
				154	
				172	
			44B6540-3	172	1
			44B6541	169	10
			44C7367	134-2	10
			44D25364	150	4
				150-34	
			44D4853	147-77	3
				150-4	
			44J11614	147-80	3
				150	
			44J1164	150	1
			44J4367	150-9	2
			441K	66-28	1
			4550-2	44-1	1
			46-10128	181-53	24
			46-10129	181-26	2
			46-10129-1	181-17	4
			46-3851-400	68-34	1
			46-3851-401	68-33	2
			46-3852	68-39	2
			46-3854-400	69-15	1
			46-3854-401	69-16	1
			46-3855-400	69-20	1
			46-3855-401	69-19	1
			46-4869	154-29	1
			46-4911	155	2
			46-4911-1	155-2	3
			46-4911-2	155	2
			46-4911-3	155	3
			46-4911-4	155	4
			46-4913	103-15	1
			46-5857	167	2
			46-6158	13	1
			46-6158-1	13	1
			46-6158-2	13-5	1
			46-6158-3	13	1
			46-6158-400	13-6	2
			46-6318	50-24	2
			46-6318-402	50-17	4
				50-23	
			46-6512-400	18-14	1
			46-6512-401	18	1
			46-6512-402	18-16	1
			46-6512-403	18	1
			46-6513-400	18-20	1
			46-6513-401	18	1
			46-6513-402	18-13	1
			46-6513-403	18	1
			46-6603	19-28	2
				97-6	
			46-6684-405	136-63	1
				206-5	
			46-6684-8	136-66	1
			46-6905	19	1
			46-6905-1	19-8	1
			46-7284	92-12	2
			46-7284-1	92-13	2
			46-7284-402	92	2
			46-7284-403	92	2
			46-7378	97-1	1
			46-7622	142-17	1
			46-7622-1	142-16	1
			46-7622-2	142	1
			46-7622-3	142-18	1
			46-7622-403	142	2
			46-7624	142-25	1
			46-7624-1	142	1
			46-7624-404	142	1
			46-8013	9-4	NP
				39-52	
			46-8014	9	NP
				40-55	
			46-8053	168	2
			46-8053-400	168-8	2

PUBLISHED BY AVIALOGS.COM

U. S. Army	U. S. Navy	British	Part Number	Figure & Index No.	Total Qty.
			46-8335	45	NP
			46-8339	45	NP
			46-8339-9	45	2
			46-8648	17	NP
			46-8648-1	17	NP
			46-8649	17	NP
			46-8649-1	17	NP
			46-8833	129	NP
			46-8978	25-36	3
			46-9333	132	NP
			46-9339	81-19	1
			46-9346	114	NP
			46-9419-400	78-35	1
			46-9419-401	78-36	1
			46-9419-402	78	NP
			46-9419-403	78	NP
			47-1309	11	NP
			47-1309-1	11	NP
			47-1331	97	NP
			47-1331-3	97-26	2
			47-1343-23	34-15	1
			47-1343-24	34	1
			47-1501	83-9	NP
				84	
			47-1501-1	83-10	NP
				84	
			47-1501-405	84-1	1
			47-1501-406	84	1
			47-1501-407	84	1
			47-1501-408	84	1
			47-7915-3	103	1
			47AC7K	109-7	1
			48-1073	66	1
			48-1078	44	NP
			48-1078-400	44-8	1
			48-1078-404	44-9	1
			48-1078-408	44	1
			48-1293	132	NP
			48-591	168	2
			48-591-401	168-26	2
			48-9-808A	154-19	2
			48463	81	18
			4868827	33-43	6
				34-35	
			49-11993	75	1
			49-11993-1	75-2	1
			49-1356-2	118-14	2
				131	
			49-1777-409	3	NP
				44-13	
			49-1777-410	3	NP
				44	NP
			49-2002	69	NP
			49-2002-1	69	NP
			49-2002-415	69-7	1
			49-2002-416	69-8	1
			49-2631	19-1	1
				20-42	
			49-2631-4	19-13	1
			49-2876	13	NP
			49-2876-1	13	NP
			49-2876-400	13-4	2
			49-2914	82	NP
			49-2914-400	82-15	1
			49-2914-401	82-11	1
			49-2914-5	82-12	1
			49-2976	19-18	1
			49-3022	33-14	1
			49-3022-1	33	1
			49-3029	34-16	1
			49-3029-1	34	1
			49-3030	34-14	1
			49-3030-1	34	1
			49-3047	38	1
			49-3047-1	38	1
			49-3047-400	38-2	2
			49-3047-401	38-1	2
			49-3047-402	38	4
			49-3056-408	34-36	2
			49-3129	15	NP
				37	
			49-3133	139	1
			49-3133-414	139-16	1
			49-3133-417	139-17	1
			49-3133-420	139	1
			49-3133-422	139-18	1
			49-3362	132	NP
			49-3424	181-35	2
			49-3614	181-44	2
			49-3658	181-8	4
			49-3684	39-31	NP
			49-3684-1	40-24	NP
			49-3685	77	1
			49-3685-400	77-16	1
			5-1142-2	125-30	1
			5-941-11SS8	55-7	1
			50-75	68	6
				69	
			51-10-34	29-5	8
			51-10-76	29-9	8
			51-1092	50-58	1236
			51-1092-1	50-59	18
			51-1094	1239-47	4
			51-1095	139-46	1
			51-1096-1	139-48	1
			51-1096-2	139-49	1
			51-1107	154-11	2
			51-1108-36-10	154-17	2
			51-118-2	94-21	1
			51-118-3	90-15	1
			51-126	94-19	1
			51-144-1	70-29	3
				70-47	
				70-60	
			51-144-3	70-11	1
			51-150	142-48	1
			51-156	95-6	2
			51-157	95-5	2
			51-163	30-3	4
			51-172	72-27	2
			51-174-1	72	1
			51-174-2	72-13	1
			51-176	2-3	8
			51-176-1	2-19	2
			51-176-2	2-20	2
			51-176-3	2-21	2
			51-176-4	2-22	2
			51-187-175	101-36	1
			51-19	84-8	4
			51-195-148	102-52	1
			51-195-174	101-6	1
			51-195-197	102	1
			51-195-252	102	1
			51-195-382	101	1
			51-195-40	102-53	2
			51-195-48	102-51	4
			51-195-55	101-5	2
			51-195-64	104-4	2
			51-195-77	101-3	2
			51-195-93	102-55	1
			51-196	101-2	2
				102-50	
			51-197-10	101-51	3
				103-39	
			51-197-109	101-49	1
			51-197-12	101-43	2
			51-197-152	103-31	1
			51-197-18	101-54	2
			51-197-189	101-38	1
			51-197-20	101-55	3

PUBLISHED BY AVIALOGS.COM

U. S. Army	U. S. Navy	British	Part Number	Figure & Index No.	Total Qty.
			51-197-22	103-37	4
			51-197-247	103	1
			51-197-255	101-48	1
			51-197-262	103	1
			51-197-284	101-45	1
			51-197-40	103-10	1
			51-197-42	101-41	2
			51-197-47	103-28	2
			51-197-5	103-26	2
			51-197-6	103-6	2
			51-197-60	101-37	2
			51-197-8	103-8	2
			51-197-88	103-43	1
			51-198-6	104-6	1
			51-199-10	104-14	1
			51-199-102	104	1
			51-199-104	104	3
				104-20	
			51-199-12	104-23	1
			51-199-128	104-8	1
			51-199-18	104-2	2
			51-199-28	104-10	5
			51-199-34	104-9	2
			51-199-40	104	3
				104-18	
			51-199-44	104-16	1
			51-199-64	104-22	2
			51-199-76	104-21	1
			51-199-8	104-13	6
			51-199-96	104-19	2
			51-200	101-8	1
			51-201	103-13	1
			51-202	103-12	1
			51-205-1	136-29	1
			51-205-2	136-27	1
			51-211	19-15	2
			51-213-11	184-9	2
				185-11	
			51-219	174-12	2
				175-11	
			51-226-24	73-39	1
			51-226-32	73-37	2
			51-247	6-38	1
			51-249	109-9	2
			51-255	142-14	1
			51-274	164-3	2
			51-276	164-7	2
			51-289	168-9	4
			51-329	102-5	1
			51-421	92-8	4
			51-423-1-0	92-32	4
			51-424	92-4	4
			51-425	92-10	4
			51-426	92-15	4
			51-427	92-9	4
			51-428	168-27	4
			51-446-0-60	62-10	2
			51-446-0-8	62-3	2
			51-446-2-62	93-2	1
			51-447-0-39	93	48
			51-454-7-0	92-28	1
			51-468	19-2	1
			51-474	102-46	1
			51-476	154-36	2
				156-8	
			51-477	154	2
				156	
			51-482	19-14	1
			51-495	102-41	1
			51-498	169-54	2
			51-498-1	169-14	6
				169-42	
			51-569	19-5	1
			51-7	68-60	1
			51-704	93-1	1
			51-720	169-27	2
			51-762-4	37-8	2
			51-778	154-38	19
				155-16	
				156-19	
				156-36	
			51-784	93-11	As Req.
			51-784-1	93	As Req.
			51-79	101-10	1
			51-83	14-29	2
			51-872-5	154-13	2
			51-873	154-15	2
			51-97	91-21	4
			51-981	12-29	8
			51-981-2	12-28	2
			519-14A	126-15	1
			519-15	126-14	1
			519-27	126-12	4
			5200	94-24	1
			5205	155	5
			5207	155	5
			5208	168-14	2
			525-10-11	90-12	2
			5291-1T8B	121-71	1
				125-27	
				199-6	
			53-1C	78-41	2
				78-51	
			53-11715	23-36	NP
				26-2	
				27-4	
				30	
			53-11715-6	30	1
			53-11715-8	30	1
			53-12016	74-5	1
			53-12016-1	74	1
			53-6388	44-7	1
			53-6667	8	2
			53-6667-1	8	2
			53-6667-2	8	2
			53-6667-3	8	2
			53-6667-4	8	2
			53-6667-5	8	2
			53-6667-6	8	2
			53-6667-7	8	2
			53-6667-8	8	2
			53-6667-9	8	2
			53-6989	169-6	1
			53-6989-1	169	1
			53-7977	154	2
			53-7977-1	154	2
			53-7977-502	154-2	4
			53-7977-503	154-3	2
			53-7977-504	154-4	2
			532A	166	8
			5343971	85	2
			5368644	85	1
			5368691	85	2
			54-1A	73-5	2
				78-5	
			54-1600-500	93	1
			54-1618	34	NP
			54-1618-1	34	NP
			54-1618-410	34-39	1
			54-1618-411	34	1
			54-1618-418	34-40	1
			54-1618-419	34	1
			54-1696	82	NP
			54-1766	15	NP
			54-1766-1	15	NP
			54-1766-2	15-5	3
			54-1766-4	15-6	2
			54-2049-2	12	NP
			54-2049-3	12	NP
			54-2058	12	NP
			54-2058-1	12	NP
			54-2059	12	NP
			54-2059-1	12	NP
			54-2079	98-16	1
				111-46	

PUBLISHED BY AVIALOGS.COM

U. S. Army	U. S. Navy	British	Part Number	Figure & Index No.	Total Qty.
			54-2358-403	112	1
			54-2358-410	112	1
			54-2358-412	112	1
			54B	70-6	4
				70-25	
				70-43	
				70-56	
			542	166	8
			54772-2	26-1	2
				27-1	
				45-38	
			54772-21	26	2
				27	
				45	
			55-195-38	102-54	1
			55-195-39	102	1
			55-3685	74	NP
			55-3685-1	74	NP
			55-3685-400	74-6	1
			55-3685-401	74	1
			55-3685-407	74-7	1
			55-3685-408	74	1
			55-3685-409	74-8	1
			55-3685-410	74	1
			55-4100	68	NP
			55-4100-1	68	NP
			55-4764	2	NP
			55-4764-1	2	NP
			55-4803-3	167-8	2
			55-4803-415	167-3	2
			55-4803-421	167-2	1
			55-4803-422	167	1
			55-4803-423	167-16	1
			55-4803-424	167	1
			55-4803-425	167-15	2
			55-5272-16	84	2
			55-5272-407	84-4	1
			55-5272-408	84	1
			55-5442	12	NP
				20	
			55-5442-1	12-9	NP
				20	
			55-5593	166-40	NP
				169	
			55-5593-1	166	NP
				169	
			55-5593-12	169-20	4
				169-23	
			55-5593-19	169-31	2
			55-5593-401	169-33	1
			55-5593-402	169	1
			55-5593-403	169-49	2
			55-5593-405	169-1	1
			55-5593-406	169	1
			55-5593-407	169	2
			55-5593-408	169	2
			55-5593-409	169	2
			55-5593-410	169	1
			55-5593-411	169	1
			55-5593-8	169	2
			55-5685	71	NP
			55-5685-407	71	NP
			55-5689-22	100-3	1
			55-5689-23	100-2	1
			55-5785	74	NP
			55-5785-406	74-14	1
				135-49	
			55-5924	142	NP
			55-5929-461	16-22	1
			55-5929-462	16	1
			55-5929-473	16-28	1
			55-5929-474	16	1
			55-5929-536	16	NP
			55-5929-537	16	NP
			55-5929-644	16	1
			55-5929-645	16	1
			55-5929-646	16	1
			55-5929-647	16	1
			55-5962	9	NP
			55-5962-1	9	NP
			55-5962-427	9-21	1
			55-5962-428	9	1
			55-5976	34	NP
			55-5976-1	34	NP
			55-6063-402	16-3	1
			55-6063-403	16	1
			55-6063-404	16-1	1
			55-6063-405	16	1
			55-6063-427	16	1
			55-6063-428	16	1
			55-6063-429	16	1
			55-6063-430	16	1
			55-6063-440	16	1
			55-6063-441	16	1
			55-6063-442	16	1
			55-6063-443	16	1
			55-6063-64	16	NP
			55-6063-65	16	NP
			55-6070	197	NP
			55-6070-2	120	1
			55-6070-4	120-19	2
			55-6070-400	120-1	1
				197-1	1
			55-6070-401	120-21	1
			55-6070-404	120-2	1
			55-6070-5	120-20	1
			55-6070-8	120-18	1
			55-6088	31	NP
				32	
			55-6088-34	31-21	1
			55-6088-401	31-11	1
			55-6088-402	31-7	2
				32-19	
			55-6088-404	31-17	2
				32-7	
			55-6088-405	31-16	4
				31-22	
				32-6	
				32-12	
			55-6088-406	31-23	2
				32-13	
			55-6088-407	32-23	1
			55-6088-408	32-18	1
			55-6088-409	32-17	1
			55-6088-419	31-19	1
			55-6088-420	32-9	1
			55-6088-421	31-13	1
			55-6088-422	32-4	1
			55-6088-423	32-22	1
			55-6088-424	32-14	1
			55-6088-425	32-16	1
			55-6088-426	32-20	1
			55-6088-427	32-5	1
			55-6088-428	32-8	1
			55-6088-429	32-3	1
			55-6088-430	32-10	1
			55-6088-431	31-18	1
			55-6088-432	31-12	1
			55-6088-433	31-20	1
			55-6088-434	31-14	1
			55-6088-435	31-10	1
			55-6088-436	31-5	1
			55-6088-437	31-3	1
			55-6088-438	31-8	1
			55-6088-439	31-2	2
				32-2	
				38	
			55-6088-440	31-1	1
				38	
			55-6088-441	32-1	1
				38	
			55-6088-444	31	2
				32	
			55-6088-445	32	1
			55-6088-446	31	2
				32	

PUBLISHED BY AVIALOGS.COM

U. S. Army	U. S. Navy	British	Part Number	Figure & Index No.	Total Qty.
			55-6088-447	31	2
				32	
			55-6088-448	31	1
			55-6088-449	32	1
			55-6088-450	32	1
			55-6088-451	31	1
			55-6088-452	31	1
			55-6088-453	31	1
			55-6088-454	32	1
			55-6088-455	31	1
			55-6088-476	31	2
				32	
			55-6088-477	31	2
				32	
			55-6088-478	31	1
			55-6088-479	31	1
			55-6088-48	31-6	1
			55-6088-480	31	1
			55-6088-481	31	2
				32	
			55-6088-482	31	2
				32	
			55-6088-483	31	1
			55-6088-484	31	1
			55-6088-485	32	1
			55-6088-486	32	1
			55-6088-487	32	1
			55-6088-488	32	1
			55-6088-489	32	1
			55-6088-490	31	1
			55-6088-54	32-21	1
			55-6088-60	31-4	1
			55-6088-71	31-9	1
			55-6088-73	32-15	1
			55-6088-83	32-11	1
			55-6088-89	31-15	1
			55-6089	33-19	1
			55-6089-1	33	1
			55-6142-1	41-3	1
			55-6142-19	41-12	1
			55-6142-3	41-11	1
			55-6154-18	42-12	1
			55-6154-2	42-3	1
			55-6154-6	42-19	1
			55-6162	15	NP
				31-24	
				38	
			55-6162-1	15	NP
				32-25	
				38	
			55-6162-400	38-9	1
			55-6162-401	38	1
			55-6162-402	38-10	4
			55-6185	179-1	8
				180-1	
			55-6191	15	NP
				186	
			55-6191-1	15	NP
				186	
			55-6193	178-32	2
			55-6193-1	178-2	4
				178-17	
				178-33	
			55-6193-2	178-14	4
				178-30	
				178-44	
			55-6193-3	178-13	3
				178-43	
			55-6193-4	178-12	3
				178-42	
			55-6193-402	178-41	2
			55-6193-7	178-23	3
				178-39	
			55-6193-8	178-21	3
				178-37	
			55-6193-9	178-4	4
				178-19	
				178-35	
			55-6194	178-1	1
			55-6194-401	178-8	1
			55-6194-403	178-6	1
			55-6194-5	178-10	1
			55-6195	178-16	1
			55-6195-401	178-29	1
			55-6195-402	178-27	1
			55-6195-403	178-25	1
			55-6242-256	26	1
			55-6242-41	190-4	1
			55-6242-42	190-5	1
			55-6242-49	26-15	1
			55-6242-499	199-10	2
			55-6242-50	27-34	1
			55-6242-512	191	1
			55-6242-515	191-6	1
			55-6242-537	190	1
			55-6242-544	26-47	1
			55-6242-90	26-28	1
			55-6242-91	27-48	1
			55-6242-92	26-48	1
			55-6242-93	27-47	1
			55-6249	11-20	NP
				18	
			55-6249-1	11	NP
				18	
			55-6249-400	18-1	1
			55-6249-401	18	1
			55-6330	13-43	NP
				187	
			55-6331	13	NP
				187	
			55-6336	15	NP
				186	
			55-6339	33-17	1
				37-14	
			55-6339-1	33	1
				37	
			55-6341	6-8	NP
			55-6341-1	6	NP
			55-6341-400	6	1
			55-6341-401	6	1
			55-6341-402	6-15	1
			55-6341-403	6	1
			55-6341-8	6-11	2
			55-6612	65-53	NP
				76	
				147	
			55-6612-122	76-1	1
			55-6612-495	76	1
			55-6612-552	76	1
			55-6690-400	17-10	2
			55-6700	33-1	1
			55-6700-401	33	1
			55-6704	143-4	1
			55-6704-400	143-5	1
			55-6704-402	143	6
			55-6705-400	143-36	1
			55-6705-401	143-38	2
			55-6705-403	143-35	1
			55-7018	75	1
			55-7019-416	75	1
			55-7031	89	NP
				193	
			55-7032	88	NP
				194	
			55-7034	90	NP
				196	
			55-7037	39	NP
				40	
			55-7311	69	NP
				80	
				82	
			55-7330	65	1
				66	
				68	
				69	
				70	

PUBLISHED BY AVIALOGS.COM

U. S. Army	U. S. Navy	British	Part Number	Figure & Index No.	Total Qty.
				71	
				72	
				73	
				74	
				83	
			55-7332	44	NP
				45	
				110	
				111	
				113	
				114	
				115	
			55-7348-400	23-13	2
			55-7348-401	23-7	2
			55-7348-402	23-17	2
			55-7348-403	23-18	2
			55-7348-407	189-3	2
			55-7351	110-5	NP
				116	
			55-7365	133	NP
				134	
			55-7368	142	NP
				143	
			55-7377	64	1
				71	
				74	
				81	
				152	
			55-7379-409	109-5	1
			55-7470	172	NP
			55-7470-402	172	1
			55-7470-403	172	1
			55-7470-408	171-1	1
				172-6	
			55-7483	9-13	NP
				11	
			55-7483-1	9	NP
				11	
			55-7483-400	11	1
			55-7483-401	11	1
			55-7483-411	11	1
			55-7483-412	11	1
			55-7483-524	11	1
			55-7483-525	11	1
			55-7483-526	11	1
			55-7483-527	11	1
			55-7521	148	NP
			55-7521-11	148-2	As Req.
			55-7521-12	148	As Req.
			55-7521-13	148	As Req.
			55-7521-400	148	As Req.
			55-7521-410	148-4	1
			55-7538-402	111-48	1
			55-7538-404	111	NP
			55-7538-413	111	1
			55-7575	108	NP
			55-7575-451	108-16	1
			55-7580	59-18	NP
				62	
				196-5	
			55-7580-1	59	NP
				62	
				196-6	
			55-7599	143	NP
			55-7599-1	143-43	1
			55-7599-400	143-45	1
			55-7599-402	143-49	1
			55-7599-6	143-44	1
			55-7602	75	NP
			55-7606	78	NP
			55-7606-400	78	1
			55-7606-406	78-22	1
			55-7606-412	78-19	1
			55-7606-414	78	1
			55-7606-415	78-20	1
			55-7606-416	78	1
			55-7607-2	11-6	NP
				44	
			55-7607-3	11	NP
				44	
			55-7607-4	44	2
			55-7607-6	44-20	4
			55-7607-7	44-21	4
			55-7612	79	NP
			55-7621	79	NP
			55-7621-423	79	1
			55-7621-424	79	1
			55-7621-425	79	1
			55-7622	115	NP
				172-52	
			55-7655	181	NP
				182	
			55-7655-1	181	NP
				182	
			55-7655-2	181	NP
				182	
			55-7655-3	182	14
			55-7655-4	182	14
			55-7655-5	182	2
			55-7655-6	182	2
			55-7672	183	3
			55-7672-1	183-23	2
			55-7672-400	183-22	2
			55-7689	48	NP
				122	
				129	
				130	
			55-7689-400	122-1	1
			55-7689-401	122-10	1
			55-7689-402	122-13	1
			55-7689-403	122-16	1
			55-7689-404	122-14	1
			55-7689-405	122-15	1
			55-7689-406	122-31	1
			55-7689-407	122-32	1
			55-7689-408	122-30	1
			55-7689-409	122-29	1
			55-7689-411	122-20	1
			55-7689-412	122-19	1
			55-7689-413	122-18	1
			55-7689-414	122-17	1
			55-7689-415	122-33	1
			55-7689-416	122-34	1
			55-7689-417	122-35	1
			55-7689-418	122-36	1
			55-7689-419	122-9	1
			55-7689-420	122-8	1
			55-7689-421	122-7	1
			55-7689-422	122-6	1
			55-7689-423	122-5	1
			55-7689-424	122-4	1
			55-7689-425	122-3	1
			55-7689-426	122-2	1
			55-7689-427	122-45	1
			55-7689-428	122-11	1
			55-7689-456	122	1
			55-7689-457	122	1
			55-7689-458	122	1
			55-7689-459	122	1
			55-7689-460	48	1
			55-7689-461	48	1
			55-7689-466	122	2
			55-7689-467	122	2
			55-7689-468	122	2
			55-7689-469	122	2
			55-7774	127	NP
			55-7774-420	127	1
			55-7774-423	127-45	1
			55-7789	127	NP
				132	
			55-7789-401	130-32	1
			55-7970	181	24
			55-7971	181	2
			55-7971-1	181	2
			55-8535	15-8	1
			55-8535-1	15	1

PUBLISHED BY AVIALOGS.COM

U. S. Army	U. S. Navy	British	Part Number	Figure & Index No.	Total Qty.
			55-8536	13	1
			55-8536-1	13	1
			5543	111	3
				112-24	
			557-5	52-7	9
				139-15	
				201-3	
				206-8	
			56-3852-500	68-40	1
			56-3852-501	68-41	1
			56-3855-500	69-21	1
			56-3855-501	69-22	1
			56-3855-502	69	4
			56-3989	174-5	1
			56-4251-505	117-9	1
			56-4251-509	117-10	1
			56-4252-511	117-1	1
			56-4252-514	117	1
			56-4252-516	117	1
			56-4965-500	94-17	1
			56-4965-502	94	1
			56-4965-504	90	NP
			56-4965-505	94	1
			56-4965-506	90-1	1
				94-1	
				196-1	
			56-4965-507	94	1
			56-5141	83-15	1
			56-5141-6	83	1
			56-7180	116	1
			56-7180-501	116-25	1
			56-7180-504	116	1
			56-7180-505	116	1
			56-7583	130	NP
			56-7583-500	130	1
			56-7583-503	130	1
			56-7758	114	NP
			56-7758-1	114	NP
			56-7789-504	35-17	1
			56-7789-505	35	1
			56-7789-506	35	1
			56-7789-507	35	1
			56-8983-2	46-8	1
			56-8983-3	46	1
			56-9294-509	109	1
			56-9294-510	109-2	1
			56B446	35-7	12
			567-1	111-21	2
			57-1341	34-19	2
			57-992	159-42	NP
			57-992-500	68	NP
				159-43	
			574-2	113-26	1
				136-74	
				139-13	
				201-1	
				206-7	
			577-2	111-80	1
				136-9	
				206-1	
			58-1077	33-20	NP
				35	
			58-1077-1	33	NP
				35	
			58-1077-506	35-10	1
			58-1077-507	35	1
			58-1077-508	35	1
			58-1077-509	35	1
			58-1215	45-2	NP
				46	
			58-1215-1	45	NP
				46	
			58-1215-503	46	1
			58-1215-504	46	1
			58-1215-510	46	1
			58-1215-511	46	1
			58-1215-519	46	1
			58-1215-520	46	1
			58-1215-521	46	1
			58-1215-522	46	1
			58-1215-531	46	1
			58-1215-532	46	1
			58-784	2-35	1
				7	
			58-784-1	2	1
				7	
			59-1724	92-16	2
			59-1724-1	92-17	2
			59-1791-401	100-13	1
			59-1791-403	103-17	1
			59-1847-509	117	NP
			59-1847-513	117	1
			59-1847-519	117	1
			59-1847-520	117	1
			59-1847-523	117	1
			59-1847-524	117	1
			59-1847-526	117	1
			59-2012	156-2	1
			59-2018	154	NP
			59-2018-400	154-32	1
			59-2018-500	154-26	1
			59-2875	132	NP
			59-2916-505	132	NP
			59-2916-507	132	1
			59-2916-512	132	1
			59-2990	35-12	1
			59-2990-1	35	1
			59-3088	15	NP
				186	
			5911-12B	109-11	1
			6-10098	111	NP
			6-10098-1	111	1
			6-10105	127	NP
			6-10107	116-27	1
			6-10108	161-15	4
			6-10109	162-22	4
			6-10122	75-21	2
			6-10122-4	75-13	2
			6-10122-5	75-11	4
				75-23	
			6-10131	23	NP
			6-10131-1	23	NP
			6-10131-2	23-9	1
			6-10131-3	23	1
			6-10132	23	1
			6-10132-1	23	1
			6-10132-2	23-8	1
			6-10132-3	23	1
			6-10135-11	109	1
			6-10135-14	109	1
			6-10135-15	109	1
			6-10135-9	109-1	1
			6-10137	79	NP
				127	
			6-10137-1	79-26	2
				127-55	
			6-10212-4	123-4	1
			6-10430	140-55	2
				142-35	
			6-10437	114	NP
			6-10437-1	114-28	1
			6-10440-12	121-56	1
				123-19	
				199-3	
			6-10440-7	123-20	1
			6-10445	54	NP
			6-10445-1	54	1
			6-10473	181	4
			6-10473-2	181-21	32
				181-30	
				181-39	
				181-48	
				181-57	
			6-10474	140	NP
				142	

PUBLISHED BY AVIALOGS.COM

U. S. Army	U. S. Navy	British	Part Number	Figure & Index No.	Total Qty.
			6-10474-2	140-51	2
				142-31	
			6-10481	121-59	1
			6-10486	121	NP
			6-10486-1	121	1
			6-10486-3	121	1
			6-10493	111	NP
			6-10493-10	111	1
			6-10493-8	111-24	1
			6-10671	111	NP
			6-10693-1	25-30	1
			6-10693-11	25-33	1
			6-10693-3	25-31	1
			6-10693-5	25-32	1
			6-10693-7	25-35	1
			6-10693-9	25-34	1
			6-10694-1	25-19	10
			6-10694-11	25-6	2
			6-10694-13	25-1	2
			6-10694-15	25-2	2
			6-10694-17	25-3	2
			6-10694-19	25-4	2
			6-10694-21	25-5	2
			6-10694-3	25-10	2
			6-10694-5	25-9	2
			6-10694-7	25-8	2
			6-10694-9	25-7	2
			6-10722	181	14
			6-10722-2	181-12	14
			6-10722-3	181	14
			6-10736	149-7	2
			6-10737	149	1
			6-10737-1	149	1
			6-10737-2	149	1
			6-10737-3	149-2	1
			6-10756	128	NP
			6-10756-1	128	NP
			6-10768	163	1
			6-10769	163-10	1
			6-10780	100-9	1
			6-10781	127	NP
			6-10783-1	163-13	1
			6-10789	127	NP
			6-10795	141-87	1
			6-10795-1	141-88	1
			6-11058-30	101-22	2
			6-11058-33	101-25	2
			6-11058-57	159-18	2
			6-11306	91-4	1
			6-11306-1	91-5	1
			6-11306-6	91	1
			6-11306-7	91	1
			6-11306-8	91	1
			6-11306-9	91	1
			6-11307-1	75	1
				89-4	
			6-11307-17	75	1
				89-3	
			6-11311	163-60	1
			6-11312	110	NP
			6-11315	111	NP
			6-11315-1	111	NP
			6-11315-2	111	2
			6-11315-3	111	2
			6-11474	65	NP
			6-11476	108-12	1
			6-11483	108-5	1
			6-11489	110	NP
			6-11564	129	NP
			6-11567	111	NP
			6-11570	111	NP
			6-11570-1	111-15	1
			6-11572	111	NP
			6-11572-2	111	1
			6-11572-3	111	1
			6-11582	106-1	4
			6-11583	110	NP
			6-11588	75-10	1
			6-11595	75-9	1
			6-11597	163-1	1
			6-11597-1	163-2	1
			6-11597-20	163	1
			6-11597-21	163	1
			6-11788	65-45	1
			6-11831	59	3
			6-11931-6	159-9	1
			6-11931-7	159-10	1
			6-11939	44-15	2
			6-11940	159	NP
			6-11940-1	159	NP
			6-11962	131	NP
			6-11962-1	131-14	1
			6-11992	63-2	1
			6-11999	155	NP
			6-11999-3	155	2
			6-12406	108-38	1
			6-12412	110-13	3
				111-37	
				114-17	
			6-12417	108	1
			6-12436	114	NP
			6-12438	111	NP
			6-12607-7	116-1	1
			6-12609-11	116	1
			6-12609-12	116	1
			6-12609-13	116	1
			6-12609-14	116	1
			6-12609-15	116	1
			6-12609-6	116	1
			6-12609-7	116	1
			6-12610-10	36	2
			6-12610-3	36-25	2
			6-12613-6	36	2
			6-12613-7	36-26	2
			6-12615	63	1
			6-12616	90	1
			6-12617	36-21	2
			6-12624-5	111-75	1
			6-12625	111	NP
			6-12625-5	111	1
			6-12625-7	111	1
			6-12633-3	133-9	1
			6-12633-7	133	1
			6-12636	66-38	1
			6-12648	133	NP
			6-12648-1	133	NP
			6-12648-6	133-43	2
			6-12648-7	133-42	2
			6-12851	114	NP
			6-12851-1	114	1
			6-12867	133	NP
			6-12867-1	133	NP
			6-12867-7	133-6	2
			6-12874-6	12	1
				21-66	
				22-53	
			6-12874-7	12	1
			6-12875-3	140-39	1
			6-13101	133	NP
			6-13108	131	NP
			6-13108-1	131-18	1
			6-13123	14	NP
			6-13123-1	14	NP
			6-13123-2	14	1
			6-13123-3	14	1
			6-13126	90-7	1
			6-13135	131	NP
			6-13135-1	131-10	1
			6-13137	111	NP
			6-13137-1	111	1
			6-13150	132-30	1
			6-13153	24	2
			6-13153-1	24	2
			6-13160	133	NP
			6-13160-1	133-4	1
			6-13175	111	NP

PUBLISHED BY AVIALOGS.COM

U. S. Army	U. S. Navy	British	Part Number	Figure & Index No.	Total Qty.
			6-13175-1	111	2
			6-13175-3	111	NP
			6-13180	111	NP
			6-13180-1	111	1
			6-13180-2	111-10	1
			6-13180-3	111	1
			6-13180-4	111	1
			6-13181	152-30	1
			6-13183	152-33	1
			6-13184	147-51	1
			6-13191-2	121-55	1
				123-1	
				199-2	
			6-13193	147-12	1
			6-13372	114	NP
			6-13378	151-11	1
			6-13393	79-13	1
			6-13419	79-7	1
			6-13503	45	NP
			6-13503-1	45	NP
			6-13504	45	NP
			6-13505	45	NP
			6-13527	130	NP
			6-13530	158	2
			6-13541	153-10	1
			6-13541-1	153	1
			6-13542	153-9	1
			6-13542-1	153-15	1
			6-13656	111	NP
			6-13656-2	111	1
			6-13677	153	1
				110-32	
			6-13686	52	NP
			6-13686-1	52	NP
			6-13686-2	52	2
			6-13687	153	1
			6-13687-1	153-20	1
			6-13699	133	NP
			6-13699-1	133-5	1
			6-13699-3	133	1
			6-13822	58-19	1
			6-13839	133	NP
			6-13839-3	133-37	1
			6-13846	116-28	1
			6-13846-11	116	1
			6-13916	142	NP
			6-13916-1	142-9	1
			6-13918	108	NP
			6-13921	142	NP
			6-13921-1	142-8	1
			6-13928	115	NP
			6-13937	110	NP
			6-13937-1	110	1
			6-13942	108-9	1
			6-13943	108-6	1
			6-14027-1	80-21	1
			6-14027-2	80	1
			6-14061	24-29	NP
			6-14061-1	24-30	NP
			6-14061-2	24-31	NP
			6-14101	35	4
			6-14117	113	NP
			6-14117-1	113	NP
			6-14117-2	113	1
			6-14117-3	113	1
			6-14134	21-68	NP
				69	
			6-14134-1	21	NP
				69	
			6-14136	69-51	1
			6-14136-1	69-52	1
			6-14136-3	69	1
			6-14136-4	69	1
			6-14152	131	NP
			6-14152-3	131	1
			6-14152-4	131	1
			6-14189	35	4
			6-14189-1	35-4	4
			6-14193	108	NP
			6-14201	35-5	4
			6-14232	141-71	1
			6-14253	141-70	1
			6-14253-7	141-72	1
			6-14255	144-55	1
			6-14256	141-56	1
			6-14263	53-9	1
			6-14270-10	141-2	1
			6-14270-9	141-4	1
			6-14272	53-7	1
			6-14273	53-11	1
			6-14275	141-58	1
			6-14276	141-63	1
			6-14277-5	84	2
			6-14277-6	84	2
			6-14301	141-78	1
			6-14301-1	141-79	1
			6-14306	140-73	1
			6-14307-4	53-13	1
			6-14309	141-5	1
			6-14310	53-3	2
			6-14315-5	53-6	1
			6-14315-7	53-4	1
			6-14324-5	53-18	1
			6-14324-7	53-20	1
			6-14326	53-26	1
			6-14335	53-1	1
			6-14341	53-33	1
			6-14341-10	53	1
			6-14343	141-6	1
			6-14344	141-7	1
			6-14345	44-31	1
			6-14364	144-1	1
			6-14370	140-18	1
			6-14374	140-45	1
			6-14375	140-60	1
			6-14376	140-62	1
			6-14377	140-63	1
			6-14378	140-65	1
			6-14379-12	140-71	1
			6-14380	140-74	1
			6-14391	53-25	1
			6-14397	144-6	1
			6-14405-1	57-41	3
				57-55	
			6-14406	53-59	2
			6-14419-9	140-11	1
			6-14420	140-7	1
			6-14421	144-12	1
			6-14424	111	NP
			6-14424-1	111-53	1
			6-14425	155	NP
			6-14425-1	115-14	1
			6-14428-9	140-4	1
			6-1443-2	30-9	1
			6-14432	36-24	2
			6-14433-14	140-9	1
			6-14444-9	53-70	2
			6-14445	67-6	2
			6-14452-1	140-76	1
			6-14453	140-78	1
			6-14454	140-80	1
			6-14455	140-81	1
			6-14456	140-82	1
			6-14457	140-83	1
			6-14458	140-28	1
			6-14459	140-24	1
			6-14460	140-22	1
			6-14461	140-30	1
			6-14467	53-22	1
			6-14478	121-57	1
			6-14480	140-72	1
			6-14481	56-2	2
			6-14488	141-68	1
			6-14489	141-66	1
			6-14498	141-64	1
			6-14499	53-57	1

PUBLISHED BY AVIALOGS.COM

U. S. Army	U. S. Navy	British	Part Number	Figure & Index No.	Total Qty.
			6-14508	83	NP
			6-14513	68-14	1
			6-14518	115	NP
			6-14518-1	115	NP
			6-14522	68-45	1
			6-14525	100-10	1
			6-14528	68-21	1
				159	
			6-14533	68-43	1
			6-14538	81-15	1
			6-14550	68	NP
			6-14550-1	68-42	1
				159-40	
			6-14557	68	NP
			6-14557-1	68-44	1
				159-41	
			6-14649	91-9	1
			6-14768	119	NP
			6-14771	68-16	1
			6-14780	111	NP
			6-14783	66-47	1
			6-14790	68	NP
			6-14790-1	68	NP
			6-14790-2	68	2
				159-44	
			6-14790-3	68	2
				159-45	
			6-14798	66	NP
			6-14798-1	66	1
				159-31	
			6-14926	114	NP
			6-14948	113	NP
			6-14963	12	6
			6-14979	119-16	1
			6-14979-1	119	1
			6-15200	113	NP
			6-15203	147-17	1
			6-15229	100-18	1
				111-77	
				119-1	
			6-15229-1	119	1
			6-15229-2	119-11	1
			6-15229-3	119-3	1
			6-15229-5	119	1
			6-15229-6	119	1
			6-15233	175-4	1
			6-15242	175-5	1
			6-15258	110	NP
			6-15264	56	1
			6-15264-1	56	1
			6-15264-2	56-15	1
			6-15264-3	56-16	1
			6-15264-4	56	4
			6-15264-5	56	4
			6-15265	141-60	1
			6-15270-2	57-39	1
			6-15270-3	57-53	1
			6-15273	141-75	1
			6-15273-1	141-74	1
			6-15274	141-61	1
			6-15279	141-62	1
			6-15295	57-18	2
			6-1537-10SS3	125-15	1
			6-1537-11S2	125	1
			6-1537-12D1	125-17	1
			6-1537-13SS10	125-19	1
			6-1537-14D1	125-23	1
			6-1537-15D1	125-24	1
			6-1537-9D1	125-21	1
			6-15541	71	NP
			6-15541-2	57-62	1
				71	
			6-15544	9	NP
			6-15544-1	9	1
				57-67	
			6-15547	116	1
			6-15549	53-51	1
			6-15854	119-24	1

U. S. Army	U. S. Navy	British	Part Number	Figure & Index No.	Tota Qty
			6-16234	59	
			6-16234-1	59	
			6-16234-3	59	
			6-16240	59	
			6-16240-1	59	
			6-16240-2	59	
			6-16240-3	59	1
			6-16240-4	59	1
			6-16276	141-14	1
			6-16277	141-12	1
			6-16278	111	NP
			6-16324	147-15	1
			6-16324-1	147-82	3
				149-18	2
			6-16324-2	151-28	2
			6-16324-3	150	1
			6-16324-4	150-29	1
			6-16324-5	146-31	1
			6-16324-6	146-32	1
			6-16324-7	146-33	1
			6-16324-8	146-35	1
			6-16324-9	146-34	1
			6-16326-5	140-6	1
			6-16331	141-54	1
			6-16332	141-47	1
			6-16339	141-19	2
				141-31	
			6-16340	141-24	1
			6-16341	141-26	2
				141-38	
			6-16342-6	141-29	1
			6-16346	141-21	1
			6-16350-10	141-32	1
			6-16355-5	141-33	1
			6-16359	191-13	1
			6-16360	191	1
			6-16364	138	NP
			6-16364-1	138	2
			6-16371-11	130-36	1
			6-16371-7	130-37	1
			6-16382	17	NP
			6-16382-1	17	NP
			6-16383	44	2
			6-16383-2	44	2
			6-16388	91	NP
			6-16388-1	91	NP
			6-16388-6	91	1
			6-16388-7	91	1
			6-16389	57-42	2
				57-56	
			6-16399	140	1
			6-16811	165	2
			6-16818	101	1
			6-16819	102	1
			6-16884	111	NP
			6-16886	32-26	36
				33-41	
				34-31	
			6-16899	146-42	2
			6-16910	146-39	1
			6-16910-1	146	1
			6-16910-2	146-40	1
			6-16910-3	146	1
			6-16941	176	72
				182-54	
			6-16963	65-20	2
				65-32	
			6-16964	65-19	1
			6-16967	140-35	1
			6-16971	146	2
			6-16981	65-31	1
			6-16982	108-48	1
			6-16982-1	108	1
			6-17007	110	1
			6-17011	47-10	1
			6-17011-1	47-9	1
			6-17023	150-21	1
			6-17024	140-19	1
			6-17091-2	11	2

PUBLISHED BY AVIALOGS.COM

U. S. Army	U. S. Navy	British	Part Number	Figure & Index No.	Total Qty.
			6-18201	141-37	1
			6-18225	127	NP
			6-18258	11	2
			6-18300	23	8
				28-22	
			6-18301	23	1
			6-18301-1	28	1
			6-18301-2	23	1
			6-18301-3	28	3
			6-18301-4	23	4
			6-18301-5	28	4
			6-18301-6	23	4
			6-18301-7	23	1
			6-18301-8	23	1
			6-18328	32-42	1
			6-18328-1	33	1
			6-18386	79-9	1
			6-18929	111	NP
			6-18929-1	111-57	1
			6-18950	22-54	1
			6-18990	76-34	1
			6-19330	45	1
			6-19330-1	45	1
			6-19330-2	45	2
			6-19349	147-18	1
			6-19357	127	2
			6-19359	147	NP
			6-19366	129	NP
			6-19366-1	129-8	1
			6-19371	133	NP
			6-19371-1	133-7	1
			6-19423	130	1
			6-19424	118-1	1
			6-19424-1	118-2	1
			6-19436	85	1
			6-19474	119	NP
			6-20319	163	79
			6-20319-1	163	6
			6-20629	146	NP
			6-20671	33	1
			6-20677	146	NP
			6-20680	146-9	2
			6-20711	17-42	4
			6-20729	45	NP
			6-20729-1	45	NP
			6-20786	11-14	2
			6-20786-1	11-15	2
			6-20786-2	11-16	2
			6-20786-3	11-17	2
			6-20792	160-8	1
			6-20796	128	NP
			6-22008	134	4
			6-22008-10	134	2
			6-22008-12	134	8
			6-22008-14	134	2
			6-22008-16	134	2
			6-22008-18	134	4
			6-22008-2	134	12
			6-22008-4	134	2
			6-22008-6	134	12
				135	
			6-22008-8	134	20
				135	
			6-22010	150	2
			6-22015	150	1
			6-22015-3	150	1
			6-22016	150	1
			6-22016-3	150	1
			6-22019	118-28	1
			6-22044	160-7	1
			6-22090	150-39	2
			6-22114	150-46	2
			6-22134	13-3	2
			6-22200	127	1
			6-22681	150-38	2
			6-3850-8	68-37	2
			6-3850-9	68-38	2
			6-3851	68-35	1
			6-3851-1	68-36	1
			6-3854	69-14	1
			6-3854-1	69-13	1
			6-3856-10	69-18	2
			6-3856-9	69-17	2
			6-4048	174-6	1
			6-4856	66	1
				95-19	
			6-7189-19	130	NP
			6-7189-19	130	NP
			6-7193	130	NP
			6-7198	155-21	3
			6-7198-1	155	2
			6-7369	44-18	2
			6-7370	100-1	1
			6-7538	46-6	2
			6-7582	130	NP
			6-7593	102-44	1
			6-7593-1	102-12	1
			6-7595	102-45	1
			6-7595-1	102-9	1
			6-7625	110-25	3
				129	
				130-19	
			6-7625-6	110	1
			6-7733	35-11	2
			6-7733-1	35	2
			6-7734	114	1
			6-7734-1	114	1
			6-7741	33-34	1
			6-7741-1	33	1
			6-7791-21	66	NP
				99-2	
			6-7791-22	66	NP
				99-3	
			6-7798	35-21	1
			6-7798-1	35	1
			6-7799	142	NP
			6-7841	34	1
			6-7841-1	34	NP
			6-7841-2	34-2	1
			6-7841-3	34	1
			6-7887	142	NP
			6-7889	113	NP
			6-7889-1	113	NP
			6-7899-2	111	NP
			6-7907	33	NP
			6-7907-10	33	2
			6-7907-2	33	NP
			6-7907-9	33-44	1
			6-7919-7	33-2	1
			6-7929	36-2	2
			6-7956	127	NP
			6-7988	120	NP
			6-7988-2	120-11	1
			6-7993	34-7	1
			6-7993-1	34	1
			6-7993-10	34	1
			6-7993-11	34	1
			6-7998-8	34-1	1
			6-7998-9	34	1
			6-7999	34-5	1
			6-7999-1	34	1
			6-7999-6	34	1
			6-7999-7	34	1
			6-8006	120	NP
			6-8006-1	120-3	1
			6-8072	33-28	11
				33-40	
				34-27	
			6-8072-2	33-29	4
				34-28	
			6-8101	38	NP
			6-8101-1	38	NP
			6-8101-5	38-21	1
			6-8101-6	38	1
			6-8129-2	18-11	1
			6-8129-3	18	1
			6-8130	155	2

PUBLISHED BY AVIALOGS.COM

U. S. Army	U. S. Navy	British	Part Number	Figure & Index No.	Total Qty.
			6-8130-1	155-29	3
			6-8134	135-50	1
			6-8143	66-35	NP
				138	
			6-8143-7	138-36	2
			6-8145	92-29	2
			6-8145-1	92-30	2
			6-8152	142-47	1
			6-8247-1	83	1
			6-8265	187-16	1
			6-8265-1	187	1
			6-8311	13-45	NP
				187	
			6-8311-1	13	NP
				187	
			6-8311-12	187	2
			6-8311-13	187	1
			6-8311-14	187	1
			6-8314-18	13-44	NP
				187	
			6-8315	13	NP
				187	
			6-8325	19-19	1
				44-12	
			6-8345-15	154-18	2
			6-8345-18	154	NP
			6-8345-19	154	NP
			6-8345-20	154-10	2
			6-8345-3	154-14	2
			6-8365	6-9	1
			6-8365-1	6	1
			6-8375	95	NP
				39-57	
			6-8376	9	NP
				40-60	
			6-8376-1	40	1
			6-8460	17-13	2
			6-8460-1	17-35	2
			6-8463	34-26	1
			6-8463-1	34	1
			6-8476	17-37	4
				17-39	
			6-8526	16	NP
			6-8526-1	16	NP
			6-8526-30	16-29	1
			6-8526-31	16	1
			6-8527	16-26	1
			6-8527-13	16	1
			6-8532	16-20	1
			6-8532-1	16	1
			6-8533	166-12	2
			6-8655	143-14	1
			6-8657	143-29	1
			6-8657-10	53-41	1
			6-8658	143-31	1
			6-8659	143-3	1
			6-8826	130	NP
			6-8943	83-27	1
			6-8944	115	NP
			6-8945	172-16	1
			6-8945-2	172	1
			6-8946	5-1	2
			6-8946-5	5	2
			6-8952	171-20	1
			6-8959	172-20	1
			6-8969-5	25-11	4
			6-8969-500	25-12	4
			6-8979	81-31	1
			6-8988	69	NP
			6-8988-1	69	2
			6-8988-3	69-31	1
			6-8988-4	69-34	1
			6-8992-6	2-38	1
			6-8992-7	2	1
			6-9204	75-19	2
			6-9205	108	NP
			6-9208	58-20	6
				58-26	
				59-20	
				59-32	
			6-9214	44	NP
			6-9214-3	44-3	1
			6-9214-5	44	1
			6-9216-5	116	1
			6-9216-7	116-26	1
			6-9219	5-2	2
			6-9219-10	5	2
			6-9220	11-8	4
				11-11	
			6-9221	58-27	1
			6-9222	58-28	1
			6-9227-1	112	1
			6-9228	37	NP
			6-9265	77-8	1
			6-9265-1	77	1
			6-9265-2	77	1
			6-9265-3	77-7	1
			6-9265-4	77-11	4
			6-9268	21-27	1
			6-9279	12-35	1
			6-9279-1	12-34	1
			6-9279-2	12	2
			6-9280	80-2	1
			6-9281	171	1
			6-9281-1	171-8	1
			6-9283	173	1
			6-9284	173-5	1
			6-9285	163-5	1
			6-9285-1	163-6	1
			6-9287	75-6	1
			6-9288	75-7	1
			6-9290	12-2	8
				12-4	
				12-7	
				12-8	
			6-9313-5	46	1
			6-9313-6	46	1
			6-9314-2	46-3	1
			6-9321	58-18	2
			6-9325-1	113-7	1
			6-9325-4	113-6	1
			6-9325-8	113	1
			6-9325-9	113	1
			6-9332	81-20	1
			6-9336	108	NP
			6-9336-1	108-30	1
			6-9340	79	NP
			6-9340-2	79	1
				90-19	
			6-9340-9	79-22	1
			6-9343	174-18	2
				175-20	
			6-9343-3	174	2
				175	
			6-9352	23	NP
			6-9352-1	23	NP
			6-9352-2	23-1	1
			6-9352-3	23	1
			6-9354-10	130-20	1
			6-9355	172	NP
			6-9355-1	172	1
			6-9356	171	NP
			6-9356-1	171	1
			6-9374-1	106	1
			6-9374-2	106	1
			6-9375	59-24	2
			6-9376	59-25	2
			6-9392	136-10	1
			6-9402-1	108	NP
			6-9408-2	62-4	2
			6-9440	7-27	1
			6-9442-1	62-12	1
			6-9442-2	62	1
			6-9442-3	62	1
			6-9442-4	62	1
			6-9446	151-31	1

PUBLISHED BY AVIALOGS.COM

U. S. Army	U. S. Navy	British	Part Number	Figure & Index No.	Total Qty.
			6-9447	48-30	4
				182-1	
				192-1	
				200-2	
			6-9449	59-16	1
			6-9449-1	59	1
			6-9449-3	59-17	2
			6-9450	111	NP
			6-9450-1	111-42	1
			6-9452	59-28	1
			6-9452-1	59-29	1
			6-9452-4	59-30	1
			6-9455	58	NP
			6-9455-1	58	NP
			6-9455-4	58-21	1
			6-9455-5	58	1
			6-9458	58	NP
			6-9458-1	58-36	1
			6-9468	81-26	1
			6-9474	115	NP
			6-9474-2	115	1
			6-9480	187	NP
			6-9481-12	140	2
				142	
			6-9481-9	140-52	2
				142-32	
			6-9490	186	NP
			6-9492	182	2
			6-9492-2	182-12	2
			6-9492-3	182-28	2
			6-9492-4	182	2
			6-9494	186	NP
			6-9502	187	NP
			6-9509	113	NP
			6-9509-1	113	NP
			6-9509-2	113-3	1
			6-9509-3	113-4	1
			6-9582	74	NP
			6-9582-1	74	NP
			6-9582-2	74-9	1
			6-9592-3	74	1
			6-9588	23	NP
			6-9588-1	23	NP
			6-9588-2	23-2	1
			6-9588-3	23	1
			6-9588-7	23	1
			6-9589	151	1
			6-9589-1	151-9	1
			6-9592	25-28	1
			6-9593	25-25	1
			6-9596	33-36	2
			6-9597-3	25-13	2
			6-9622	151	NP
			6-9705	127	NP
			6-9708	130	NP
			6-9708-7	130	1
			6-9987-2	127	1
			6-9987-3	127	1
			6-9987-4	127	1
			6-9987-8	127-6	1
			6AO-366	108-37	1
			6A1174	108-36	1
			6M342	82-57	2
			6M343	82-49	2
			6M344	92-59	2
			6M345	82-46	2
			6M377	82-56	2
			6001DD1-4D	49-7	4
				204-5	
			6041H57	46-11	2
			6046H11	113	1
			60870	135-32	4
				135-42	
				205-4	
			61-5642	84-9	2
			61-5642-1	84	2
			61-5837	6-3	1
			61-5837-1	6	1
			61-6189-1	93-19	4
			61-6866	12-21	14
				12-26	
			61-6866-3	12-17	8
			61-7431	84-18	4
			61-7431-1	84-19	4
			61-9396-2	167-46	2
			61-9846	83-13	1
			62	131-8	1
			624	91-11	3
				109-38	
			64-1031	2-13	NP
				4	
			64-1031-1	2	NP
				4	
			64-1031-32	4-2	1
			64-1031-33	4	1
			64-1031-400	4-1	1
			64-1031-401	4	1
			64-1031-408	4-9	1
			64-1031-409	4	1
			64-1031-410	4-8	1
			64-1031-411	4	1
			64-1031-418	4-7	1
			64-1031-419	4	1
			64-1031-425	4-3	1
			64-1031-426	4	1
			64-1031-500	4-6	1
			64-1031-501	4	1
			64-1031-535	4	1
			64-1031-536	4	1
			64-1031-537	4	1
			64-1031-538	4-4	1
			64-1031-546	4-5	1
			64-1031-547	4	1
			64-1031-553	4	1
			64-1031-554	4	1
			64-1080	2	NP
			64-1080-1	2	NP
			64-1424-531	3	1
				5	
			64-1424-532	3	1
				5	
			64-1425	6	1
			64-1425-529	3	1
			64-1425-530	3	1
			64-1434-508	10	1
			64-1434-509	10	1
			64-1490	12	NP
			64-1490-1	12	NP
			64-1490-15	12-13	1
			64-1490-16	12	1
			64-1490-17	12-23	1
			64-1490-18	12	1
			64-1490-19	12-14	1
			64-1490-20	12	1
			64-1490-21	12-15	1
			64-1490-22	12	1
			64-1490-25	12-24	1
			64-1490-26	12	1
			64-1490-27	12-16	1
			64-1490-28	12	1
			64-1490-29	12-25	1
			64-1490-30	12	1
			64-1490-411	12-10	1
			64-1490-412	12	1
			64-1490-413	12-19	1
			64-1490-414	12	1
			64-1490-423	12-20	1
			64-1490-424	12	1
			64-1498-502	168-29	2
			64-1498-504	166	1
				168-1	
			64-1498-505	166	1
				168	
			64-1600	89-2	NP
				93	
				193-2	

PUBLISHED BY AVIALOGS.COM

U. S. Army	U. S. Navy	British	Part Number	Figure & Index No.	Total Qty.
			64-1600-600	93	1
			64-1600-601	93	1
			64-1600-602	93	1
			64-1600-603	93	1
			64-1680	11	NP
				33	
			64-1680-1	11	NP
				33	
			64-1680-500	11-1	2
				33-45	
			64-1680-503	11	2
				33	
			64-1680-507	11	2
				33-47	
			64-1680-511	11-2	2
				33-46	
			64-1680-519	11	2
				33	
			64-1680-524	11	2
				33	
			64-1694-505	82-29	1
			64-1694-506	82-28	1
			64-1697	67	NP
			64-1697-1	67	NP
			64-1697-511	67-13	1
			64-1697-512	67	1
			64-1698	82	NP
			64-1698-3	82-18	1
			64-1698-500	82-22	1
			64-1698-501	82-27	1
			64-1698-504	82-23	1
			64-1741-506	132	NP
			64-1741-514	132	1
			64-2054	11	NP
			64-2054-1	11	NP
			64-2054-406	11-19	2
			6403B	67	2
			6403D	78-10	5
				84	
			6411B	79	5
				79-1	
			645849J	148-3	1
			649742	109-17	1
			65-1332-504	138-32	1
			65-1741-509	132	1
			65-3584	6-22	NP
			65-3584-2	6-24	1
			65-3584-3	6-25	1
			65-3584-4	6-28	1
			65-3584-500	6-23	1
			65-3584-501	6	1
			65-3584-7	6-27	1
			65-4101-400	156-4	1
			65-4101-502	154	NP
			65-4101-503	156	1
			65-4101-504	154-5	1
				156-1	
			65-4127-500	155-15	5
			65-4127-503	154-7	1
				155	
			65-4127-504	154-1	1
				155	
			65-4127-505	154	1
				155	
			65-4127-506	154-8	1
				155	
			65-4127-508	154-9	1
				155-1	
			65-4127-6	155-17	5
			65-4139-501	154	NP
				159-26	
			65-4774	5	NP
			65-4774-1	5	NP
			65-4774-553	5-12	1
			65-4774-554	5	1
			65-4782-512	10	1
			65-4782-513	10	1
			65-5280-506	83-12	1
			65-5299	14	NP
			65-5299-1	14	NP
			65-5594	52	NP
				136	
			65-5594-500	136-45	1
			65-5594-501	136-46	1
			65-5594-502	136-48	1
			65-5594-503	136-49	1
			65-5594-512	52-3	1
			65-5594-513	52-21	1
			65-5594-514	52-19	1
			65-5594-520	136-61	1
			65-5594-523	136	1
			65-5594-524	52	1
			65-5594-525	52	1
			65-5594-526	52	1
			65-5594-528	52	1
			65-5594-529	52	1
			65-5594-533	52-5	1
			65-5594-534	52-6	1
			65-5594-536	52-20	1
			65-5594-540	52	1
			65-5594-541	52	1
			65-5594-544	136-60	1
			65-5594-548	52-4	1
			65-5594-561	52-17	1
			65-5594-562	52-18	1
			65-5594-563	52-16	1
			65-5594-564	52-15	1
			65-5594-567	52	1
			65-5594-568	52	1
			65-5594-569	52	1
			65-5594-570	2	1
			65-5594-571	136-68	1
			65-5594-572	136	1
			65-5594-573	52-13	1
			65-5594-587	52-1	1
			65-5594-588	52-2	1
			65-5594-589	52-10	1
			65-5594-590	52-14	1
			65-5594-591	52-12	1
			65-5594-592	52	1
			65-5594-593	52	1
			65-5594-594	52	1
			65-5594-597	136-69	1
			65-5594-598	136-70	1
			65-5594-599	136-57	1
			65-5594-600	136-58	1
			65-5594-601	136-50	1
			65-5594-604	136-59	1
			65-5594-605	52	1
			65-5594-606	136	1
			65-5594-607	136	1
			65-5594-608	136	1
			65-5594-609	136	1
			65-5594-610	52	1
			65-5594-611	52	1
			65-5594-612	52	1
			65-5594-613	52	1
			65-5594-614	52	1
			65-5594-615	52	1
			65-5594-616	52	1
			65-5594-617	52	1
			65-5594-618	52	1
			65-5594-619	136-62	1
			65-5594-620	136-72	1
			65-5594-621	136-73	1
			65-5594-631	52	1
			65-5660	49	NP
				138	
				204	
			65-5660-17	49-20	1
			65-5660-29	138-8	1
			65-5660-34	49	1
			65-5660-409	138-13	1
			65-5660-414	138-15	1
			65-5660-49	49-15	2
				138-7	

PUBLISHED BY AVIALOGS.COM

U. S. Army	U. S. Navy	British	Part Number	Figure & Index No.	Total Qty.
			65-5660-5	49-8	1
			65-5660-501	138-4	1
			65-5660-502	138-2	1
			65-5660-503	138-12	1
			65-5660-504	138-9	1
			65-5660-505	49-11	2
			65-5660-506	49-12	2
			65-5660-507	49-13	2
			65-5660-508	49-14	2
			65-5660-509	49-21	2
			65-5660-51	49-23	2
				138-10	
			65-5660-510	49-22	2
			65-5660-517	49	1
			65-5660-518	49-19	1
			65-5660-519	49-18	1
			65-5660-520	49	1
			65-5660-521	138-16	1
			65-5660-522	138-11	1
			65-5660-523	49-16	1
			65-5660-524	138-1	1
			65-5660-525	49-5	1
			65-5660-526	49-17	1
			65-5660-528	49	1
			65-5660-529	138-35	1
			65-5660-530	49-9	1
			65-5660-531	138-34	1
			65-5660-532	49-6	1
			65-5660-533	138-3	1
			65-5660-534	49	1
			65-5660-535	49	1
			65-5660-536	138-18	1
			65-5660-537	49	1
			65-5660-539	49	1
			65-5660-54	49	1
			65-5660-540	49-1	4
			65-5660-541	49-4	4
			65-5660-542	49	1
			65-5660-543	49	1
			65-5660-544	49	1
			65-5660-545	49	1
			65-5660-546	49	2
			65-5660-547	49	2
			65-5660-548	49	2
			65-5660-549	49	2
			65-5660-550	49	1
			65-5660-551	49	1
			65-5660-552	49	1
			65-5660-553	49	1
			65-5660-554	138-19	1
			65-5660-555	138-20	1
			65-5660-556	138-23	1
			65-5660-557	138-24	1
			65-5660-558	138-25	1
			65-5660-559	138-26	1
			65-5660-560	138-28	1
			65-5660-561	138-21	1
			65-5660-562	138-22	1
			65-5660-564	49-2	4
			65-5660-565	49-3	4
			65-5660-6	49-10	2
			65-5667-13	65-3	2
			65-5667-17	65-7	1
			65-5667-22	65	1
			65-5667-26	65-5	2
			65-5667-503	65-4	1
			65-5667-504	65	1
			65-5667-505	65-6	1
			65-5667-506	65	1
			65-5667-507	65-8	1
			65-5667-508	65	1
			65-5679	51	NP
				135	
				205	
			65-5679-400	135-29	1
			65-5679-401	135-33	1
			65-5679-402	135-26	1
			65-5679-411	51-6	1
			65-5679-421	51-3	2
			65-5679-422	51-2	2
			65-5679-425	51	1
			65-5679-439	51-17	1
			65-5679-448	51	1
			65-5679-467	135	2
			65-5679-512	51-7	1
			65-5679-513	51-8	1
			65-5679-516	51	1
			65-5679-517	51	1
			65-5679-520	135-35	1
			65-5679-521	135-34	1
			65-5679-522	135-25	1
			65-5679-526	51-5	1
			65-5679-535	135-24	1
			65-5679-537	135-21	1
			65-5679-540	135-17	1
			65-5679-542	135-23	1
			65-5679-543	51	1
			65-5679-544	135-22	1
			65-5679-548	51-16	1
			65-5679-549	51-15	1
			65-5679-550	51-14	1
			65-5679-551	51	1
			65-5679-552	51	1
			65-5679-553	51	1
			65-5679-554	135-7	1
			65-5679-555	51-9	1
			65-5679-556	135-11	1
			65-5679-557	135-5	1
			65-5679-558	51-13	1
				135-6	
			65-5679-559	51-20	1
				135-12	
			65-5679-560	135-14	1
			65-5679-561	135-18	1
			65-5679-562	135-2	1
			65-5679-563	135-8	1
			65-5679-564	135-9	1
			65-5679-565	135-10	1
			65-5679-566	51-10	1
			65-5679-567	135-15	1
			65-5679-568	135-19	1
			65-5679-569	51	1
				135-16	
			65-5679-570	51	1
				135-20	
			65-5679-571	135-1	1
			65-5679-572	51	1
			65-5679-573	135-3	1
			65-5679-574	135-4	1
			65-5679-578	51-18	1
			65-5679-579	51-11	1
			65-5679-580	51-19	1
			65-5679-581	51-12	1
			65-5679-582	51	1
			65-5679-583	51	1
			65-5679-584	51	1
			65-5679-585	51	1
			65-5679-587	135-38	1
			65-5679-588	135-37	1
			65-5679-589	135-36	1
			65-5679-590	139-39	1
			65-5679-591	51	1
			65-5679-592	135-13	1
			65-5679-593	135-46	1
			65-5679-594	135-47	1
			65-5679-595	135	2
			65-5679-596	135	1
			65-5679-597	135	1
			65-5679-598	135	1
			65-5679-599	135	1
			65-5679-602	51	1
			65-5679-603	51	1
			65-5679-604	51	1
			65-5679-605	51	1
			65-5679-606	51	2
			65-5679-607	51	2

PUBLISHED BY AVIALOGS.COM

U. S. Army	U. S. Navy	British	Part Number	Figure & Index No.	Total Qty.
			65-5679-608	51	1
			65-5679-609	51	1
			65-5679-610	51	1
			65-5679-611	51	1
			65-5689-515	100	1
			65-5715	135	NP
			65-5715-501	135-52	1
			65-5715-502	135-53	1
			65-5715-507	135-54	1
			65-5715-508	135-55	1
			65-5783-606	82-10	1
			65-5821-32	121-26	1
			65-5821-44	121-15	1
			65-5821-527	121-19	1
			65-5821-535	121-35	1
			65-5821-555	121-25	1
			65-5821-556	121-37	1
			65-5821-577	121-27	1
			65-5821-578	121-12	1
			65-5821-582	121-10	1
			65-5821-594	121-13	1
			65-5915	14	NP
			65-5915-1	14	NP
			65-5915-500	14-3	1
			65-5915-501	14	1
			65-5915-502	14-2	1
			65-5915-503	14	1
			65-5915-504	14-1	1
			65-5915-505	14	1
			65-5975	33	NP
			65-5975-1	33	NP
			65-5975-410	33-30	1
			65-5975-411	33	1
			65-5975-511	33-38	1
			65-5975-512	33	1
			65-5975-517	33-33	1
			65-5975-518	33	1
			65-5975-519	33	1
			65-5975-520	33	1
			65-5975-610	33-39	1
			65-5975-611	33	1
			65-5975-614	33	1
			65-5975-615	33	1
			65-5982	15	NP
			65-5982-1	15	NP
			65-5982-500	15-15	1
			65-5982-501	15	1
			65-6019	16	NP
			65-6019-1	16	NP
			65-6019-514	16	1
			65-6019-515	16-10	1
			65-6019-516	16-9	1
			65-6019-517	16	1
			65-6019-518	16-8	1
			65-6019-519	16	1
			65-6019-545	16	1
			65-6019-546	16	1
			65-6019-547	16-11	1
			65-6019-548	16	1
			65-6019-557	16-12	1
			65-6019-558	16	1
			65-6044	13-47	NP
				187	
			65-6044-1	13	NP
				187	
			65-6093	33-7	1
				36	
			65-6093-1	33	1
				36	
			65-6093-513	36-1	2
			65-6142	11-21	NP
				39-60	
				41	
			65-6142-500	41-1	1
			65-6142-502	41-21	1
			65-6142-505	41	1
			65-6142-506	41	1
			65-6154	11	NP
				40-51	
				42	
			65-6154-500	42-1	1
			65-6154-502	42	1
			65-6154-504	42	1
			65-6242-108	26	1
			65-6242-130	26	1
			65-6242-132	26	1
			65-6242-152	26	1
			65-6242-153	26	1
			65-6242-154	26	1
			65-6242-21	26-44	1
			65-6242-22	26-43	1
			65-6242-21	26-44	1
			65-6242-23	26-45	1
			65-6242-604	26-22	1
			65-6242-605	26-46	1
			65-6242-606	27-29	1
			65-6242-607	27-44	1
			65-6242-608	26-18	2
				27-42	
			65-6242-616	26-17	2
				27-33	
			65-6242-617	26-36	1
			65-6242-618	27-14	1
			65-6242-620	26-16	1
			65-6242-621	26-32	2
				27-16	
			65-6242-622	27-35	1
			65-6242-633	27-15	1
			65-6242-634	190	2
				191-2	
			65-6242-636	190-2	2
				191	
			65-6242-646	190-8	1
			65-6242-647	191-9	1
			65-6242-648	190	1
			65-6242-649	191	1
			62-6242-653	191-12	1
			65-6242-654	191-11	1
			65-6242-655	191-4	1
			65-6242-659	191	1
			65-6242-660	191	1
			65-6242-666	26-20	1
			65-6242-667	26-38	1
			65-6242-668	27-28	1
			65-6242-669	27-43	1
			65-6242-67	26	1
			65-6242-673	26-42	1
			65-6242-674	26-41	1
			65-6242-676	26-37	1
			65-6242-677	26-24	1
			65-6242-679	26-23	1
			65-6242-682	27-37	1
			65-6242-686	27-26	1
			65-6242-687	27-39	1
			65-6242-688	27-22	1
			65-6242-689	27-24	1
			65-6242-69	26	1
			65-6242-690	27-23	1
			65-6242-696	190-1	4
				191-1	
			65-6242-701	191	1
			65-6525-501	17-27	1
			65-6525-502	17	1
			65-6525-503	17	1
			65-6690	17	1
				178-48	
			65-6690-1	17	1
				178	
			65-6690-500	17-12	1
			65-6690-501	17	1
			65-6690-506	17	2
				178	
			65-6690-507	17	2
			65-6691-10	54-34	1
			65-6691-15	54-29	1

PUBLISHED BY AVIALOGS.COM

U. S. Army	U. S. Navy	British	Part Number	Figure & Index No.	Total Qty.
			65-6691-18	54-27	1
			65-6691-19	54-28	1
			65-6691-20	54-30	1
			65-6691-21	54-31	1
			65-6691-22	54-32	1
			65-6691-3	54-1	1
			65-6691-4	54-2	1
			65-6691-503	54-20	1
			65-6691-6	54-9	As Req.
			65-6691-9	54-33	1
			65-6705	54-42	NP
				143	
			65-6806-3	161	NP
				162	
			65-7331	75	1
				77	
				78	
				79	
			65-7331-2	75	1
				77	
				78	
				79	
			65-7350	17	NP
				178	
				183	
			65-7359-500	177	NP
			65-7359-501	177	NP
			65-7359-502	177	NP
			65-7359-503	177	NP
			65-7359-507	177	4
			65-7359-510	177	1
			65-7359-511	177-24	1
				179	
				180	
			65-7359-512	177	1
			65-7359-513	177	1
			65-7359-514	177	1
			65-7359-515	177	1
			65-7359-516	177	4
			65-7380-514	108-20	NP
				109	
			65-7380-521	109-25	4
			65-7380-534	109	1
			65-7380-540	109	1
			65-7380-542	109	1
			65-7380-544	109	1
			65-7380-545	109	1
			65-7380-546	109	1
			65-7380-547	109	1
			65-7380-549	109	1
			65-7380-550	109	1
			65-7380-551	109	1
			65-7380-555	109	1
			65-7387	163	NP
			65-7387-510	163	1
			65-7387-511	163-27	1
			65-7590	107	NP
				108-45	
			65-7590-500	107-17	1
			65-7590-502	107-22	1
			65-7590-503	107-23	1
			65-7590-508	107-28	1
			65-7590-512	107-21	1
			65-7590-514	107-26	1
			65-7590-517	107-24	1
			65-7590-525	107-19	1
			65-7590-527	107-7	1
			65-7590-532	107-29	1
			65-7590-534	107-18	1
			65-7590-535	107-20	1
			65-7590-538	107-25	1
			65-7590-543	107	1
			65-7590-544	107-16	1
			65-7616	176	NP
			65-7616-1	176	NP
			65-7616-2	176	NP
			65-7672	183	1
			65-7672-500	183-29	1
			65-7672-503	183-28	1
			65-7960	176-3	2
			65-7961	176-2	2
			65-7962	176-1	4
			655-4	126-13	4
			655-5	126	1
			655-6	126-16	2
			656768	109-16	1
			659060	145-10	3
				150-32	
			66-25507	121	1
				199	
			66-5529	10-19	1
			66-5529-1	10	1
			66-5530	10-26	1
			66-5530-1	10	1
			66-5531	10-1	1
			66-5531-1	10	1
			66-5532	10-7	1
			66-5532-1	10	1
			6612-10Z	76	22
			6732-03	109-33	1
			677-1	126-10	1
			677-2	126-18	1
			677-3	126-4	1
			677-4	126-7	1
			677-5	126-8	1
			677-6	126	1
			677-7	126	1
			677-8	126-3	1
			677-9	126-11	1
			678-1	126-2	1
			68-763-419	6	NP
			68-763-420	6	NP
			68-763-421	6	1
			68-763-422	6	1
			68-767-16	6	NP
			68-767-17	6	NP
			68-767-18	6	1
			68-767-19	6	1
			68-771-16	6	NP
			68-771-17	6	NP
			68-771-18	6	1
			68-771-19	6	1
			69-1787	172-1	1
				174-1	
			69-1787-1	174-21	2
				175-23	
			69-1787-12	175	1
			69-1787-13	172	1
				175-1	
			69-1787-14	174-23	1
			69-1787-15	174-24	1
			69-1787-2	174-22	2
				175-24	
			69-1787-4	174	1
			69-2423	54-21	3
			69-2423-601	54-23	3
			69-2423-602	54-24	3
			69-2423-605	54-22	3
			69-2423-606	54-25	3
			69-2423-607	54-26	3
			69-3659	114	NP
			69-3659-614	114	1
			69-3659-615	114	1
			69-3659-616	114	1
			7	145-13	1
			7-1335-1	44	NP
			7-1345	18-9	1
			7-1345-1	18	1
			7-1365	20	1
			7-1365-1	20	1
			7-1365-2	20-2	1
			7-1365-3	20	1
			7-1365-4	20-3	1
			7-1365-5	20	1
			7-1365-6	20-4	1
			7-1365-7	20	1

PUBLISHED BY AVIALOGS.COM

U. S. Army	U. S. Navy	British	Part Number	Figure & Index No.	Total Qty.
			7-1365-8	20-5	1
			7-1365-9	20	1
			7-1370	17	NP
			7-1371	17	NP
			7-1371-1	17	NP
			7-1372	17	NP
			7-1372-1	17	NP
			7-1373	17	NP
			7-1373-1	17	NP
			7-1500-42	25-24	1
			7-1500-43	25	1
			7-1503	83	NP
			7-1507	75	NP
			7-1509-4	25-22	1
			7-1509-5	25	1
			7-1515	58-33	1
				193-5	
			7-1517	71	1
			7-1517-1	71	1
			7-1519-6	25-23	1
			7-1519-7	25	1
			7-1520-5	25-21	1
			7-1520-6	25	1
			7-1521-6	25-20	1
			7-1521-7	25	1
			7-1528	96-1	1
			7-1531-1	6-35	1
			7-1531-31	6-31	NP
				196-8	
			7-1535	114-21	1
			7-1536	7-9	1
				196-9	
			7-1536-1	7-19	1
			7-1536-2	7-25	1
			7-1536-3	7-21	1
			7-1536-5	7-18	1
			7-1537	95-10	NP
				96	
			7-1537-1	96	1
			7-1642	33-5	1
			7-1642-13	33	1
			7-1642-9	33-6	1
			7-1646-17	114-22	1
			7-1646-19	114	1
			7-1655	143-22	1
			7-1958-15	45	NP
				46	
			7-1958-16	45-3	NP
				46	
			7-1958-19	46	2
			7-1958-22	46	2
			7-1958-23	46	2
			7-1958-5	46	2
			7-1961	112-1	1
			7-1961-1	112-11	1
			7-1961-10	112	1
			7-1961-11	112	1
			7-1961-2	112	1
			7-1961-3	112-2	1
			7-1961-9	112	1
			7-2014	133	NP
			7-2014-7	133	1
			7-2092-7	53-60	2
			7-2114	132-64	1
			7-2114-5	132	1
			7-2937-17SS2	125-16	1
			7-302	125-8	1
			7-303	125-10	1
			7-304-1	125-9	1
			7-305	125-12	1
			7-306-2	125-5	1
			7-307	125-6	1
			7-308	125-2	1
			7-310	125-3	1
			7-311	125-11	1
			7-315	125-4	1
			7-44-6631	150-33	2
			7-500-8-1	121-73	1
				125-1	
				125-8	
			7-501	125-7	1
			712-1A	138-6	2
				204-4	
			74-1174-600	108-21	1
			74-1174-606	108	NP
			74-1337	12	NP
			74-1337-1	12	NP
			74-1433-601	10	1
			74-1433-602	10	1
			74-1607	9-2	1
			74-1607-1	9	1
			74-1611-1	116-33	1
			74-1611-707	116	2
			74-1831	9-12	NP
				11	
			74-1831-1	9	NP
				11	
			74-1831-600	11	1
				33	
			74-1831-601	11	1
				33	
			74-1831-624	11	1
				33	
			74-1831-625	11	1
				33	
			744-6	114-34	2
				138-5	
				204-3	
			75-1531-3	6-36	1
			75-1531-4	6-37	1
			75-1531-5	6	1
			75-3440	69	NP
			75-3440-1	69	NP
			75-3441-650	68	NP
			75-3441-651	68	NP
			75-3448	84-3	1
			75-3468	73	NP
			75-3468-600	73-1	1
			75-3468-605	73-6	1
			75-3468-620	73-10	1
			75-3468-621	73	1
			75-3469	72	NP
			75-3471-410	67-2	1
			75-3471-411	67	1
			75-3471-605	67-23	1
			75-3471-606	67	1
			75-3471-608	67-11	1
			75-3741-609	67	1
			75-3471-761	67-12	1
			75-3471-762	67	1
			75-3508	89-1	NP
				92	
				193-1	
			75-3508-600	92-1	1
			75-3508-601	92-2	1
			75-3513-649	66	1
			75-3513-700	66	1
			75-3577	66	NP
				73	
			75-3577-661	66-22	2
			75-3577-668	66	1
			75-3577-669	66-24	1
			75-3577-679	66	1
			75-3577-686	66-25	1
			75-3577-719	66	1
			75-3590-620	3-1	1
			75-3590-621	3	1
			75-3590-807	3	1
			75-3590-808	3	1
			75-3684-633	74	1
			75-3684-634	74-2	1
			75-3684-635	74	1
			75-3684-676	74-4	1
			75-3684-710	74-1	1
			75-3684-711	74	1

PUBLISHED BY AVIALOGS.COM

U. S. Army	U. S. Navy	British	Part Number	Figure & Index No.	Total Qty.
			75-3684-712	74-3	1
			75-3684-713	74	1
			75-3686	73	NP
			75-3686-17	73-18	1
			75-3686-522	73-19	1
			75-3686-523	73-20	1
			75-3686-649	73	1
			75-3686-650	73	1
			75-3686-652	73	1
			75-4093-612	84-2	1
			75-4093-614	84	1
			75-4093-618	84	1
			75-4093-619	84	1
			75-4122	72-1	1
			75-4122-1	72-2	1
			75-4133	83	1
			75-4772-13	3-8	1
			75-4772-14	3-9	1
			75-4772-17	3-10	1
			75-4772-18	3	1
			75-4772-4	3-7	1
			75-4772-5	3	1
			75-4772-604	3-11	1
			75-4772-605	3	1
			75-4781	10	1
			75-4781-1	10	1
			75-4783	10	1
			75-4783-1	10	1
			75-4784	10	1
			75-4784-1	10	1
			75-4799	11	NP
			75-4799-1	11	NP
			75-4799-600	11-7	1
			75-4799-601	11	1
			75-4799-602	11-9	1
			75-4799-603	11	1
			75-4799-706	11	1
			75-4799-707	11	1
			75-4799-708	11	1
			75-4799-709	11	1
			75-4801-612	166-2	1
			75-4801-613	166-3	1
			75-4801-616	166	1
			75-4801-617	166	1
			75-4801-620	166-1	1
			75-4801-621	166	1
			75-4805-739	13-22	2
			75-4805-763	13-36	4
			75-5025	15	NP
			75-5025-26	15	NP
			75-5025-600	15-7	2
			75-5127-617	2-32 8	1
			75-5127-618	2 8	1
			75-5667	65	NP
			75-5667-600	65-1	1
			75-5667-617	65-2	1
			75-5977-421	15	NP
			75-5977-422	15	NP
			75-5977-600	15-14	1
			75-5977-601	15	1
			75-5977-602	15	1
			75-5977-603	15	1
			75-6002	16	NP
			75-6002-1	16	NP
			75-6002-604	16-17	1
			75-6002-605	16	1
			75-6002-611	16	1
			75-6002-615	16	1
			75-6525-16	17-24	1
			75-6525-601	17-30	1
			75-6525-602	17-32	1
			75-6691-604	54-17	1
			75-6691-606	54-12	1
			75-6691-609	54-14	1
			75-7336	105	NP
			75-7336-600	106-30	2
			75-7336-606	106-27	2
			75-7336-616	106-24	1
			75-7336-617	106-25	1
			75-7336-618	106	1
			75-7336-619	106	1
			75-7336-620	105-22 106	1
			75-7635-612	111-47	1
			7540	111 115	2
			7545	148-7	1
			755-26-8-8	106	2
			755-5-2-8	146-13	2
			755-8-2-8	106	2
			765-1	106-28	4
			765-11	136-52	1
			765-2	121 138-17	2
			765-3	28 38-6	8
			7658E	53-34 202-3	2
			77AT2K	109-9	4
			770A2	28-2	4
			770G01	177-9	4
			78-581-744	9 10	1
			78-581-745	9 10	1
			78-582-742	9 10	1
			78-582-743	9 10	1
			7800-6	43-13	2
			786-1	20-48 44-6	1
			79-2220	105	NP
			79-2220-1	105	NP
			79-2220-703	105-19	4
			79-3021	33-15	1
			79-3021-1	33	1
			79-3021-737	33-16	1
			8-1137-7-11P9	125-22	1
			8-1142-13-10D12	55-11	1
			8-1142-13-25CUI	125-36	1
			8-1142-13-42D12	125-20	1
			8-1262-2	6-10 195-3	1
			8-1262-3	6 195-4	1
			8-1264	59-3	2
			8-1264-1	59-4	2
			8-1266	59-13	1
			8-1266-1	59-14	1
			8-1267	59-10	1
			8-1267-1	59-11	1
			8-1268-3	59-6	2
			8-1268-4	59-7	2
			8-1269	59	1
			8-1270	59	1
			8-1273	75-24	2
			8-1280	111	NP
			8-1280-1	111	NP
			8-1285	172-3 173-1	1
			8-1285-1	173-2	1
			8-1293-9	132-51	1
			8-1298-1	59	NP
			8-1298-3	59	2
			8-1340-25D3	125-28	1
			8-1521	59	NP
			8-1521-1	59	NP
			8-1521-2	59	2
			8-1521-3	59-19	2
			8-1521-4	59-21	2
			8-1522	59	NP
			8-1522-1	59	1
			8-1526	71	NP

RESTRICTED
PUBLISHED BY AVIALOGS.COM

U. S. Army	U. S. Navy	British	Part Number	Figure & Index No.	Total Qty.
			8-1526-12	71	1
			8-1526-13	71	1
			8-1526-17	71	1
			8-1526-18	71	1
			8-1532-7	115-5	1
			8-1538	60	NP
			8-1538-1	60-14	1
			8-1538-2	60-15	1
			8-1538-3	60	1
			8-2548-1	12-6	2
			8-2567	132	NP
			8-2567-1	132	1
			8-2567-3	132-1	1
			8-2653	170-10	2
			8-2654	170-4	2
			8-2780	130	NP
			8-2785	141-67	1
			8-2788-6	53-58	2
			8-2790	53-35	1
			8-2790-1	53-36	1
			8-2791	53-37	4
			8-2792-12	53-52	1
			8-2805	79-15	1
			8-2807-16	53-47	1
			8-2808	53	NP
			8-2808-1	53	NP
			8-2808-2	53-38	1
				57-14	
			8-2808-3	53-39	1
				57-15	
			8-2808-9	57-16	2
			8-2827	53-62	1
			8-2827-1	53-63	1
			8-3250	163-76	1
			8-3252	163-75	1
			8-441-15SS8	137-7	1
			8-588-2	166-55	2
			8-588-3	166	2
			8-588-8	166	2
			8-6-6RST-D	135-27	1
			8-787-6	7-7	1
			8-787-9	7	1
			8-8-6JTD	121	1
			80581	119-10	1
			81-2564	167-34	2
			81-2565	167-35	2
			81-3414	171-28	1
			81-4547	83-16	3
				84-5	
			810B4D	82-24	1
			811BT5D	106	2
			811CT4	105-3	8
				188	
				189	
			811CT45-4	105-4	1
			811CT45-5	106-31	2
			811CT45-8	39-24	2
				40-47	
			811CT5	106-26	2
			811CT8	38-22	12
				40-45	
				41-25	
				42-23	
				106-23	
				170-22	
				190	
				199	
			811FT4	105-7	1
			811FT5	106	4
			811FT8	41-26	1
			811HT12NS	190	2
			811JT4D	138-27	1
			811JT6D	138-14	1
			811JT8D	51-4	4
			811JT8NS	51	4
			811T5CS	106	2
			81174	145-7	NP
			82500	145-1	1
			82822	145-6	NP
			83-1	147	1
			83400	145	1
			84-1580-10	2- 30	1
			84-1580-11	2	1
			84-1580-14	2-31	1
			84-1580-15	2	1
			84-1580-16	2-27	1
			84-1580-17	2	1
			84-1580-700	2-26	1
			84-1580-701	2	1
			84-1580-702	2-28	1
			84-1580-703	2	1
			84-1580-8	2-29	1
			84-1580-9	2	1
			84-1611	108-2	NP
				116	
			84-1611-706	116	1
			84-1611-707	116	1
			85-3424-767	68	1
				70	
			85-3424-772	68	1
				70	
			85-3424-776	68	1
				70	
			85-3445	74	NP
			85-3445-1	74	NP
			85-3513	66	NP
			85-3540-601	91-30	2
			85-3540-703	91-20	2
			85-3540-706	91-37	1
			85-4772-700	2-14	1
				3	
				5	
				6	
			85-4772-701	2	1
				3	
				5	
				6	
			85-4805	9-10	NP
				13	
				16	
			85-4805-1	9	NP
				13	
				16	
			85-4805-720	13	1
				14	
				16	
			85-4805-721	13	1
				14	
				16	
			85-4806	9-11	NP
				15	
			85-4806-1	9	NP
				15	
			85-4806-700	15	1
			85-4806-701	15	1
			85-6164-601	39-4	1
			85-6164-606	39-10	1
			85-6164-608	39-11	1
			85-6164-609	39-7	1
			85-6164-612	39-8	2
				40-3	
			85-6164-614	39-13	1
			85-6164-618	40-6	1
			85-6164-619	40-2	1
			85-6164-622	40-8	1
			85-6164-627	40-15	1
			85-6164-700	39-5	1
			85-6164-701	40-17	1
			85-6164-708	39-3	1
			85-6164-709	39-2	1
			85-6164-710	39-9	1
			85-6164-711	40-4	1
			85-6164-712	40-16	1
			85-6164-713	40-14	1
			85-6164-714	40-13	1
			85-6164-715	40-1	1

PUBLISHED BY AVIALOGS.COM

U. S. Army	U. S. Navy	British	Part Number	Figure & Index No.	Total Qty.
			85-6164-716	40-5	1
			85-6164-717	39-6	1
			85-6164-718	39-1	1
			85-6525	17	1
				178-47	
			85-6525-705	17	1
			85-6525-712	17	1
				178	
			85-6525-713	17	1
			85-6525-716	17	1
			85-6525-720	17	1
				178	
			85-6525-721	17-26	2
			85-6525-722	17	1
				178	
			85-6691	54	NP
				143	
			85-6691-700	54-19	1
			85-6691-701	54-35	1
			85-6691-708	54-18	1
			85-6691-709	54-13	1
			85-6691-710	54-15	1
			85-6691-712	54-16	1
			85-6691-714	54-3	1
			85-6691-716	54-4	1
			85-6691-717	54	1
			85-6691-718	54-10	1
			85-6691-719	54-7	1
			85-6691-722	54	1
			85-6691-723	54	1
			85787	112-5	1
			85788	112-4	1
			8715	116-16	1
			8805	82-25	2
			8851	114-31	1
			8905K618	153-5	1
			8909K520	166	2
			895-101	167-41	4
			9-10607	131	NP
			9-10614	111	NP
			9-10614-3	111	2
			9-10618	127-47	1
			9-10618-5	127-48	1
			9-10618-6	127-49	1
			9-10619	118	NP
			9-10631	130	NP
			9-10632	118	NP
			9-10632-1	118	NP
			9-10644	118	NP
			9-10644-1	118	1
			9-10644-2	118	1
			9-10675	33-13	1
			9-10675-1	33	1
			9-10695	150	1
			9-10696	150	1
			9-10831	106-52	3
				155-34	
			9-10900	130	NP
			9-10984	13	NP
			9-10984-1	13	NP
			9-1642-7-82	125-29	1
			9-1642-8SS8	125-32	1
			9-2039-5D1	55-10	1
			9-2312-6	166-13	2
			9-2312-7	166-14	2
			9-2715	130	NP
			9-2715-1	130-39	1
			9-2901	15	NP
			9-2901-1	15	NP
			9-2901-5	15-1	2
			9-2938-1	113	NP
			9-2951	142	NP
			9-2951-12	142-11	1
			9-2951-7	142-10	1
			9-2958	14	NP
			9-2958-1	14	NP
			9-2958-10	14-18	1
			9-2958-11	14	1
			9-2958-12	14-19	1
			9-2958-13	14	1
			9-2958-17	14	1
			9-2958-18	14	1
			9-2958-19	14	1
			9-2958-2	14	1
			9-2958-20	14	1
			9-2958-21	14	1
			9-2958-22	14	1
			9-2958-3	14	1
			9-2958-4	14	1
			9-2958-5	14	1
			9-2958-6	14-14	1
			9-2958-7	14	1
			9-2958-8	14-15	1
			9-2958-9	14	1
			9-2988	34-6	2
				36	
			9-2988-4	36-8	8
			9-3038	41-22	2
				42-20	
			9-3038-7D1	137-10	1
			9-3038-8D1	137-11	1
			9-3038-9D1	137-8	1
			9-3040-11	39	1
			9-3040-9	39	NP
			9-3044	15	NP
			9-3044-1	15	NP
			9-3044-2	15-2	2
			9-3048-2	18-4	1
			9-3048-3	18	1
			9-3049-10	40	NP
			9-3049-12	40	1
			9-3080-22	33-24	4
				34-34	
				188-12	
				189-13	
			9-3082-1	168-35	2
			9-3082-2	168-34	2
			9-3082-28	168	2
			9-3084	142	NP
			9-3087	15	NP
				186	
			9-3087-29	186	1
			9-3087-30	186	1
			9-3092	83	NP
			9-3092-8	83-37	1
			9-3093	15	NP
				186	
			9-3124-33	34-17	1
				37-12	
			9-3124-34	34	1
				37	
			9-3126	15	NP
				37	
			9-3126-1	15	NP
				37	
			9-3127	15	NP
				37	
			9-3186	17	NP
			9-3186-1	17-15	3
				17-41	
			9-3194	15	NP
			9-3194-1	15	NP
			9-3194-14	15-28	1
			9-3194-15	15	1
			9-3194-2	15-27	1
			9-3194-3	15	1
			9-3195	16	NP
			9-3195-1	16	NP
			9-3195-39	16-23	1
			9-3195-40	16	1

PUBLISHED BY AVIALOGS.COM

U. S. Army	U. S. Navy	British	Part Number	Figure & Index No.	Total Qty.
			9-3265	13-48	NP
				54	
			9-3265-1	54-38	2
			9-3265-5	54-39	4
			9-3266	13	NP
			9-3266-1	13-1	1
			9-3266-11	13-2	1
			9-3267	143-30	1
			9-3267-13	53-42	1
			9-3268	54-5	1
			9-3269	143-28	1
			9-3370	177	NP
			9-3370-1	177-25	2
			9-3379	147-23	1
			9-3424-1	181-38	2
			9-3428	172-22	1
			9-3441	134	NP
			9-3441-1	134-23	4
			9-3441-3	134-24	4
			9-3442	81	1
			9-3581	115	NP
			9-3581-1	115-19	2
			9-3581-2	115-24	1
			9-3582	75-1	1
			9-3586	95-13	NP
				96	
			9-3586-1	96	1
			9-3590	58	1
				95-15	
			9-3590-1	58-29	1
			9-3599	5	NP
			9-3599-1	5	NP
			9-3600-4	113-9	1
			9-3601	113-10	1
			9-3610	151	NP
			9-3612	130	NP
			9-3613	58-17	1
				95-16	
			9-3614-1	181-47	2
			9-3640	163	NP
			9-3640-1	163-16	1
			9-3646	129	NP
			9-3646-6	129	1
			9-3648	44-22	1
			9-3648-1	44	1
			9-3658-1	181-11	14
			9-3660	79	NP
				127	
			9-3660-1	79-27	2
				127-56	
			9-3661	143	NP
			9-3661-1	143-50	1
			9-3661-11	143-51	1
			9-3663	105-14	NP
				106	
			9-3663-1	106	NP
				105-15	
			9-3663-10	106	2
			9-3663-11	106	1
			9-3663-12	106	1
			9-3663-13	106	1
			9-3663-14	106	1
			9-3663-15	106	1
			9-3663-16	106	1
			9-3663-7	106-44	2
			9-3664	58-16	4
				194-4	
			9-3668	105-5	NP
			9-3668-7	105	1
			9-3680	151	NP
			9-3680-2	151-33	2
			9-3681	33-4	1
			9-3682	181-6	8
			9-3685-2	77-17	4
			9-3685-3	77-18	1
			9-3685-5	77-19	2
				77-20	

U. S. Army	U. S. Navy	British	Part Number	Figure & Index No.	Tota Qty
			9-3685-6	77-21	
			9-3687	182	3(
			9-3687-2	182-55	3(
			9-3688	143-46	1
			9-3705	143	NF
			9-3713	127	NF
			9-3714	142	NF
			9-3720	121-58	1
			9-3721	162	NF
			9-3721-1	162	NP
			9-3723	161	NP
			9-3723-1	161	NP
			9-3725-13	109-3	1
			9-3725-14	109	1
			9-3725-20	109	1
			9-3725-22	109	1
			9-3725-23	109	1
			9-3725-24	109	1
			9-3725-25	109	1
			9-3725-26	109	1
			9-3725-28	109	1
			9-3725-29	109	1
			9-3725-30	109	1
			9-3725-32	109	1
			9-3725-33	109	1
			9-3727	39-30	NP
			9-3727-1	40-25	NP
			9-3729	9-3	NP
				39-51	
			9-3729-1	9	NP
				40-53	
			9-3731	106	1
			9-3731-1	106-2	1
			9-3732	106-5	1
			9-3732-1	106	1
			9-3746	105	NP
			9-3746-1	105	NP
			9-3746-2	105-18	2
			9-3750	130	NP
			9-3765	127	NP
			9-3765-1	127	1
			9-3765-16	127-46	1
			9-3765-23	127	1
			9-3769	24	1
			9-3769-1	24	1
			9-3776	131	NP
			9-4603	131	NP
			9-4604	111	NP
			9-4607	131	NP
			9-4608	128	NP
			9-4611	131	NP
			9-4616	131	NP
			9-4647-2	131	1
			9-4648	141-89	1
			9-4649	46-2	1
			9-4649-12	46	1
			9-4902	128	NP
			9-4918-14	45	1
			9-4918-15	45	1
			9-4918-16	45	1
			9-4918-3	45-6	1
			9-4918-6	45	NP
			9-4919-14	45	1
			9-4919-17	45	1
			9-4919-18	45	1
			9-4919-3	45	1
			9-4919-9	45	NP
			9-5011	108	NP
			9-5023	108	NP
			9-5041	131	NP
			9-5041-2	131-16	1
			9-5053	79	NP
				127	
			9-5053-1	127-53	1
				79-25	
			9-5058	131	NP
			9-5058-13	131	1

PUBLISHED BY AVIALOGS.COM

U. S. Army	U. S. Navy	British	Part Number	Figure & Index No.	Total Qty.
			9-5058-7	118-15	2
				131-3	
			9-5058-8	131	1
			9-5060-1	184-11	1
			9-5062	131	NP
			9-5062-1	131-13	1
			9-5064	117-11	1
			9-5067	63	1
			9-5077	108	1
			9-5077-3	108-10	1
			9-5082	65-41	1
			9-5206	59-9	1
			9-5211	34-11	2
			9-5212	33-12	2
			9-5212-4	33	2
			9-5213	34-8	2
			9-5258	157-2	1
			9-5258-1	157-8	1
			9-5259-1	157	1
			9-5259-10	157	1
			9-5259-11	157	1
			9-5259-2	157	1
			9-5259-3	157	1
			9-5259-4	157	1
			9-5259-6	157	1
				113-25	
			9-5302-6	35-3	4
			9-5305	33-8	1
			9-5305-1	33	1
			9-5311	90-2	NP
				196-2	
			9-5314	80	NP
			9-5314-1	80	1
			9-5326	24	1
			9-5326-1	24	1
			9-5327	24	1
			9-5327-1	24	1
			9-5405-3	110	1
			9-5405-4	111	1
			9-5405-5	114	1
			9-5405-6	114	1
			9-5405-7	114-18	1
			9-5405-8	111	1
			9-5405-9	110	1
			9-5501	110	NP
			9-5502	110	1
			9-5502-1	110	1
			9-5502-2	110	1
			9-5502-3	110	1
			9-5523	133	NP
			9-5523-11	133	1
			9-5523-7	133-21	1
			9-5523-8	133-19	1
			9-5525	111	NP
			9-5538	39-61	1
				42	
			9-5538-1	40-52	1
				41	
			9-5538-2	41	2
				42	
			9-5538-6	41-24	2
				42-22	
			9-5539	39-18	1
			9-5539-1	40-41	1
			9-5539-2	39	2
				40	
			9-5539-5	39-20	1
			9-5539-7	40-43	1
			9-5598-3	12	1
			9-5598-1	12	NP
			9-5598-2	12-1	1
			9-5598-3	12	1
			9-5607	131	NP
			9-5611	170-7	2
			9-5621	79	NP
			9-5622	71-7	1
			9-5625	71-8	1
			9-5640	68	NP
			9-5640-1	68-6	1
				87-4	
			9-5642	68	NP
			9-5642-1	68-7	1
				87-5	
			9-5644	136	NP
			9-5644-3	136-51	1
			9-5775	153-22	1
			9-5785	153-2	1
			9-5804	158	1
			9-5804-1	158-3	2
			9-5876	133	NP
			9-5876-1	133	NP
			9-5876-13	133-14	2
			9-5876-19	133-15	2
			9-5876-23	133	2
			9-5877	110	NP
			9-5883	68-1	1
				159-32	
			9-5884	132	NP
			9-5884-1	132-56	1
			9-5884-10	132	1
			9-5884-7	132	1
			9-5887	68	NP
			9-5892	114-3	2
			9-5894	108	NP
			9-5895	108	NP
			9-5895-1	108	1
			9-5897	68-5	1
			9-5898	43	NP
			9-5898-1	43	NP
			9-6015	185-3	1
			9-6022	172-43	1
			9-6048	119	NP
			9-6048-1	119	NP
			9-6073	111	NP
			9-6073-1	111	1
			9-6103	74-11	1
			9-6103-1	74	1
			9-6105	74	NP
			9-6105-1	74	NP
			9-6105-2	74-10	1
				159-46	
			9-6105-3	74	1
				159-47	
			9-6115	81-13	1
			9-6116	130	NP
			9-6116-1	130-30	1
			9-6116-2	130-31	2
			9-6116-6	130-29	2
			9-6134	68-58	1
			9-6134-1	68-59	1
			9-6143	68-18	1
			9-6256-3	66-40	1
			9-6262	66-46	1
			9-6265	66	NP
			9-6265-1	66	1
				159-30	
			9-6274	66	NP
			9-6274-1	66	1
				159-28	
			9-6291	71-6	1
			9-6452	127-17	1
			9-6452-13	127-16	1
			9-6452-16	127-19	1
			6-6452-19	127-15	1
			9-6452-21	127	1
			9-6452-26	127-20	1
			9-6452-30	127-21	1
			9-6452-33	127-22	1
			9-6452-37	127-23	1
			9-6452-4	127-14	1
			9-6452-41	127	1
			9-6452-9	127-18	1
			9-6459	129	NP
			9-6469	71	NP
			9-6469-1	71	1
				159-48	

PUBLISHED BY AVIALOGS.COM